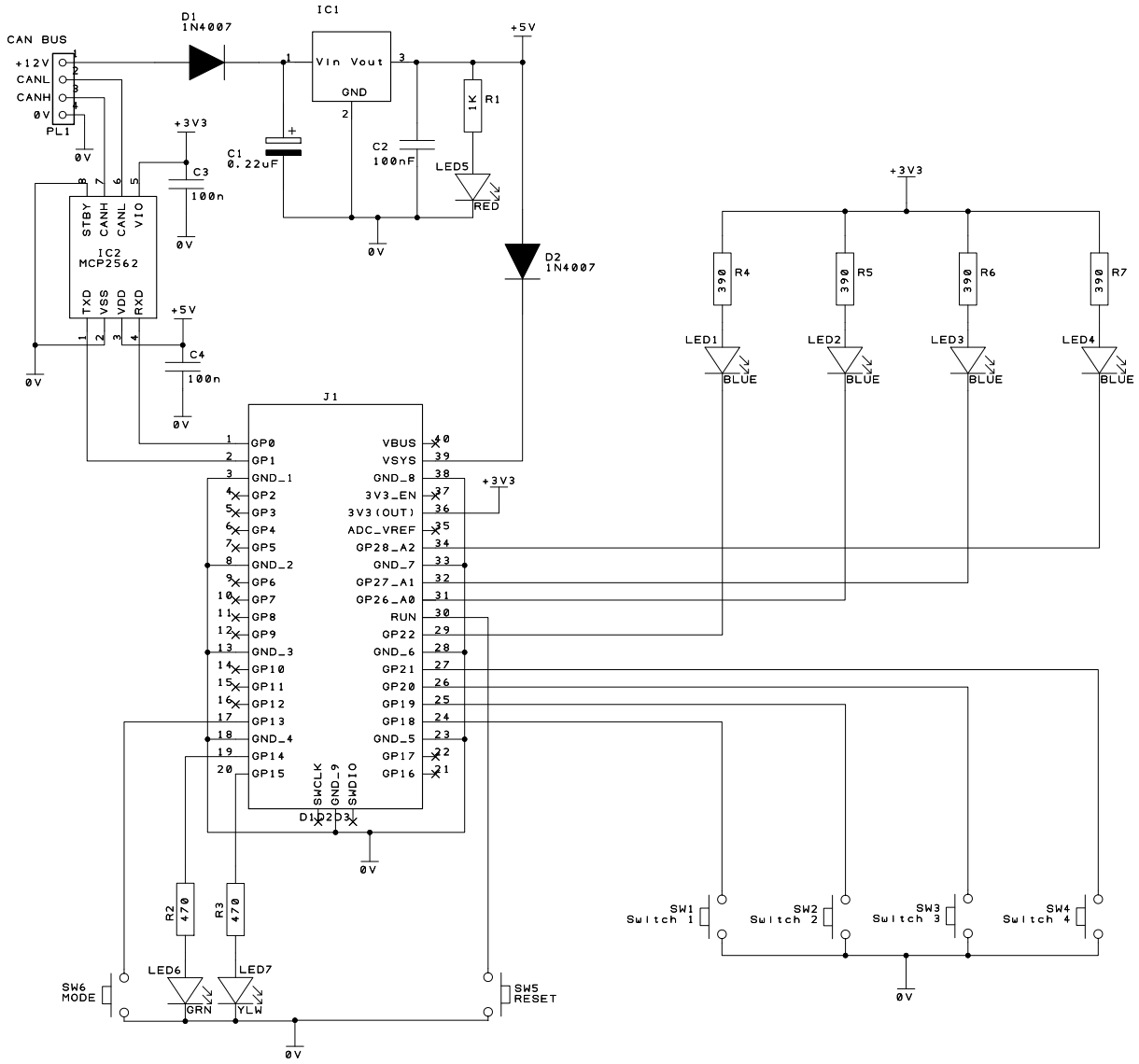

PROJECT:	Pico 4in4out		
DRAWING TITLE:	Circuit Schematic		
DRAWN BY:	Martin Da Costa	REVISION:	
SHEET:	OF	STATUS:	
DATE:	6/2/24		