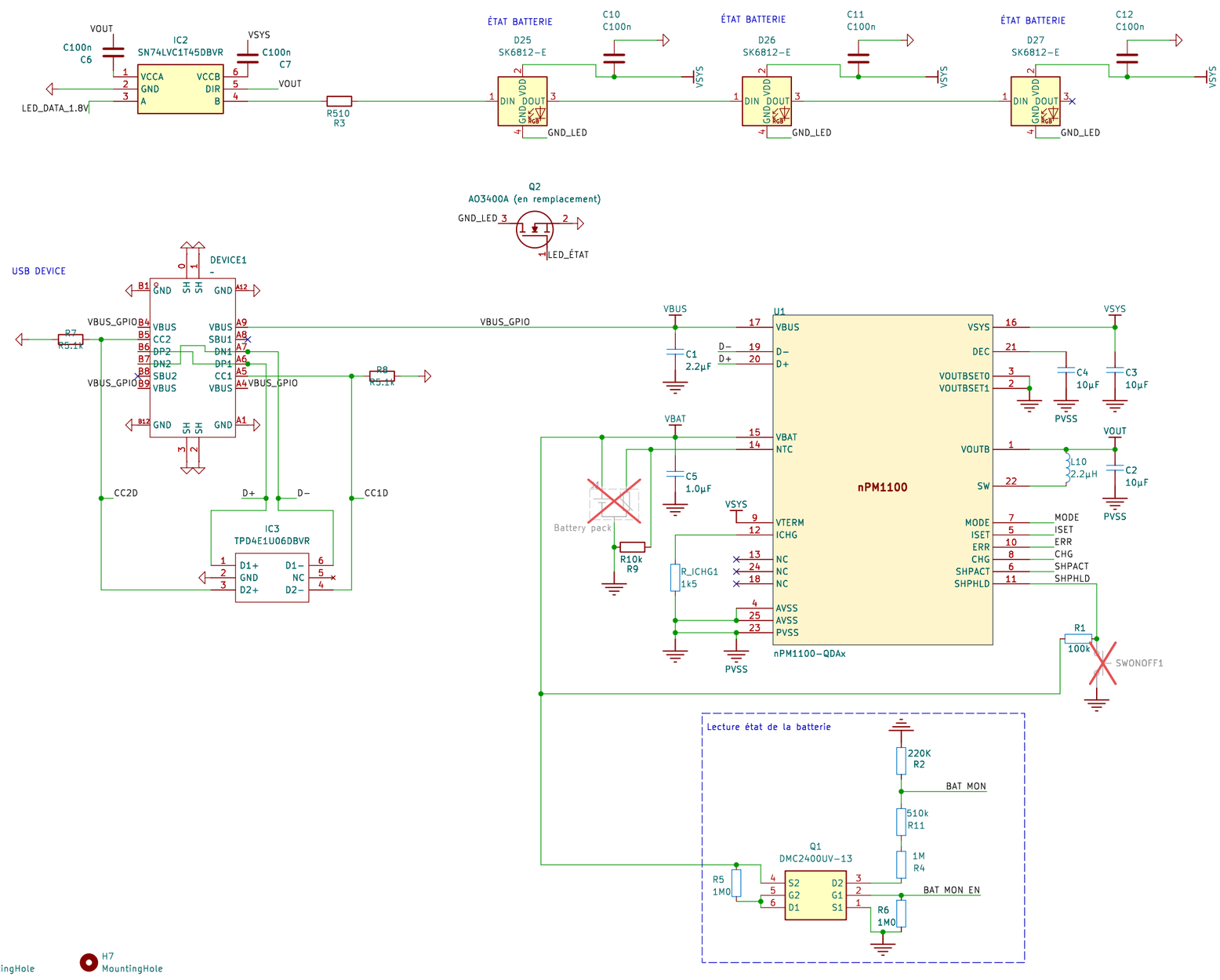

H1 MountingHole
H2 MountingHole
H3 MountingHole
H7 MountingHole
H4 MountingHole
H5 MountingHole
H6 MountingHole
H8 MountingHole
H9 MountingHole

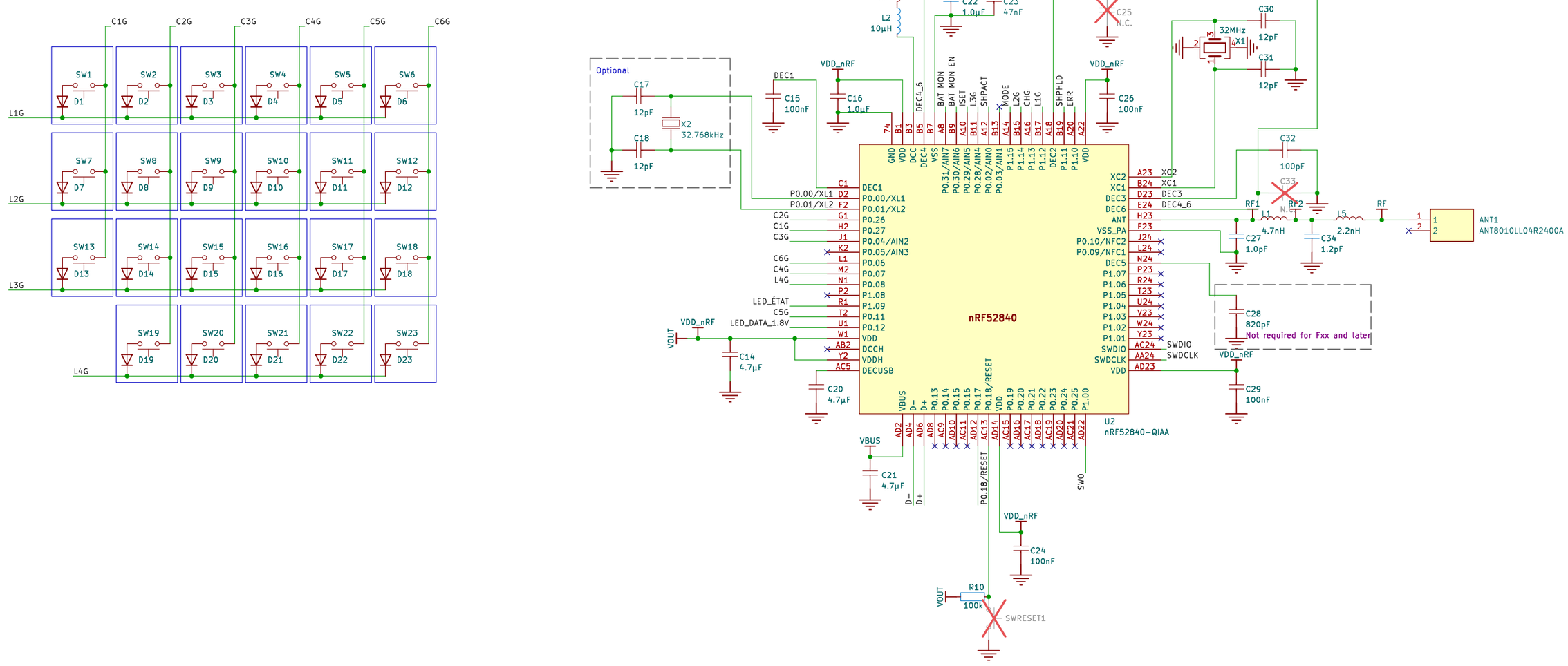

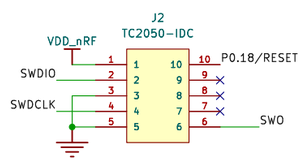

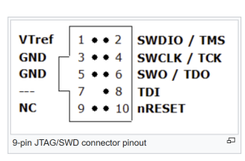

Sheet: /
File: 000_ITEM.kicad_sch

Title: ItemX3

Size: A2	Date:	Rev: 01
KiCad E.D.A. 9.0.6		Id: 1/1