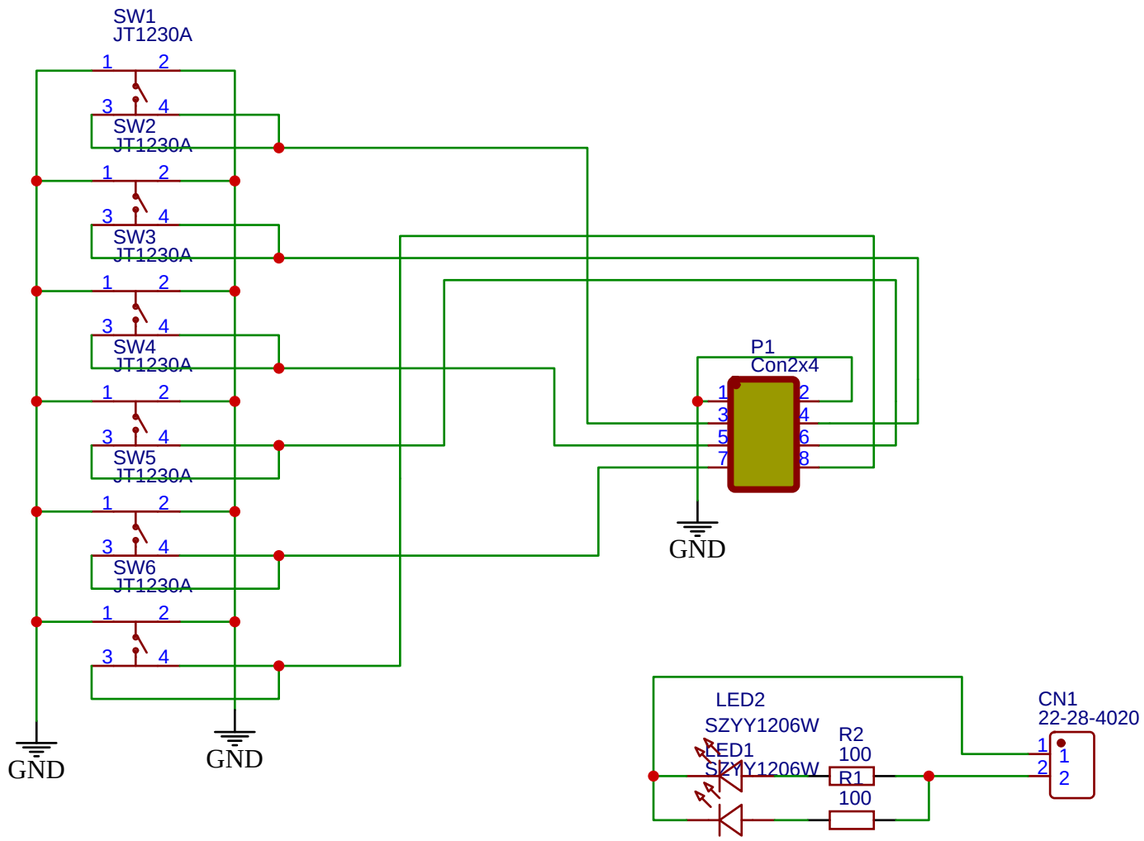

TITLE: G1000 FMS		REV: 1.0
EasyEDA	Company: mrusk	Sheet: 1/1
	Date: 2021-12-28 Drawn By: mrusk	