UNIVERSITY OF ASIA PACIFIC

DEPARTMENT OF COMPUTER SCIENCE AND ENGINEERING (CSE)

Course Code: CSE 316
Course Title: Peripheral and Interfacing Lab
Project Title: Fire Fighter Robot

Submitted By:	**Submitted To:**
Marwa Jamal Regi. No: 22101163 Section: D (1) Team Member: Most. Mahomuda Aktar (22101171)	A.S. Zaforullah Momtaz Assistant Professor Computer Science and Engineering

Index:

Sl. No.	Contents	Page No.
1	Project Title, Subtitle & Goals	3
2	Project Description	3
3	List of Modules and Their Functionalities	4
4	List of Required Sensors	6
5	List of Power Modules and Their Functionalities	6
6	Circuit Diagram of the Project	7
7	Project Steps of Development	8
8	Gantt Chart	9
9	Budget Preparation	10
10	CEP Mapping	10
11	References	16

Segment-1: Project Title, Subtitle & Goals

Project Title:

Fire Fighter Robot

Project Subtitle:

An Autonomous Fire Detection and Extinguishing System

Project Goals:

1. Develop an autonomous robot capable of detecting fires in indoor and outdoor environments.
2. Develop to be capable of extinguishing fires in every environment.
3. Implement smoke sensors to accurately identify fire hazards.
4. Design an efficient movement system to navigate towards fire sources safely.
5. Integrate a water or fire-suppression mechanism for quick response.

Segment-2: Project description

The Fire Fighter Robot is an autonomous fire detection and response system designed to identify fire hazards using a flame sensor and take appropriate action. This project integrates sensor-based detection, motorized movement, and embedded system control to create a functional prototype for fire safety Applications.

Overview

The robot is built on a transparent I-shaped chassis, providing a sturdy yet
lightweight structure to accommodate the necessary components. The system is powered by an Arduino Uno, which acts as the central processing unit, receiving input from the flame sensor and controlling the robot’s movements. The power supply consists of a 3.7V Li-ion battery, ensuring efficient energy consumption and portability.

Functionality & Operation

When a flame is detected, the flame sensor sends a signal to the Arduino, which processes the data and triggers a response. The robot navigates using an L298N dual H-bridge motor driver, controlling a 1:120 single-axis TT motor connected to sports TPE plastic wheels. Based on predefined logic, the robot can approach or avoid the fire source.

Key Features

- Autonomous Fire Detection: The flame sensor actively monitors the surroundings.
- Motorized Mobility: The L298N driver efficiently controls motor movements.
- Embedded Control System: Arduino Uno ensures real-time decision-making.
- Compact and Lightweight: The transparent I-shaped chassis provides easy mobility.
- Portable and Energy Efficient: Operates on a rechargeable 3.7V Li-ion battery.

This project demonstrates the practical application of sensor integration, motor control, and embedded programming, making it an excellent learning experience in robotics and fire safety.

Segment-3: List of modules and their functionalities

Module	Component	Functionality
Control Unit	Arduino UNO	Processes sensor data,

		controls motors and actuators, and manages overall robot operation
Fire Detection	IR 3-Pin Flame Sensors (x3)	Detects flame using infrared light; sends signals to Arduino when fire is detected
Mobility	BO Motors (x4) + Wheels	Provides movement and directional control for the robot.
Motor Driver	L298N Motor Driver	Controls motor speed and direction based on Arduino signals.
Mechanical Structure	Chassis	Supports and holds all components; provides a stable platform for the robot.
Circuit Assembly	Solderless Breadboard	Provides a temporary platform for wiring and connecting electronic components.
Actuation	Mini Servo	Controls rotation of water pump nozzle for aiming water jet.
Fire Suppression	5-9V Water Pump + Pipe	Pumps water from the tank to extinguish the fire.
Water Storage	Water Tank	Holds water supply for the pump
Power Supply	3.7V Li-ion Batteries (18650) x 2	Provides electrical power to all electronic components and motors
Wiring & Connections	Jumper Wires	Connects various

		modules and components electrically.
Switching Circuit	TIP-122 Transistor + 104pF Capacitor + 1K Resistor	Controls power to the water pump by acting as a switch based on Arduino signal.

Segment-4: List out the required sensors

Sensor	Sensing Material	Input	Output
Flame Sensor	Infrared photodiode	Infrared radiation from fire	Digital/Analog signal (0 or 1)

Segment-5: List of power modules and their functionalities

1. Battery Management System (BMS - 2S, 3S):

- BMS (Battery Management System) is a protection circuit that manages the charging, discharging, and health of Lithium-ion batteries to prevent overcharging, overheating, and deep discharge.
- 2S BMS: Used for a 2-cell (7.4V) Li-ion battery pack. It ensures safe operation by balancing and monitoring both cells.
- 3S BMS: Designed for a 3-cell (11.1V) Li-ion battery pack, providing higher voltage and better power efficiency while maintaining safety.

2. Buck Converter (LM2596):

○ The LM2596 is a step-down (buck) voltage regulator that converts a higher DC voltage to a lower DC voltage efficiently.
○ Input voltage: 4V – 40V, Adjustable Output: 1.23V – 37V
○ It is used when the circuit requires a lower voltage than the main power supply. Example: Reducing 12V to 5V for Arduino.

3. Booster Converter (XL6009):

○ The XL6009 is a step-up (boost) voltage regulator that increases low DC voltage to a higher DC voltage.
○ Input voltage: 3V – 32V, Adjustable Output: 5V – 35V
○ It is useful when the circuit requires a higher voltage than the battery can provide. Example: Boosting 3.7V (single Li-ion) to 12V for Motors.

Segment-6: Circuit diagram of the project

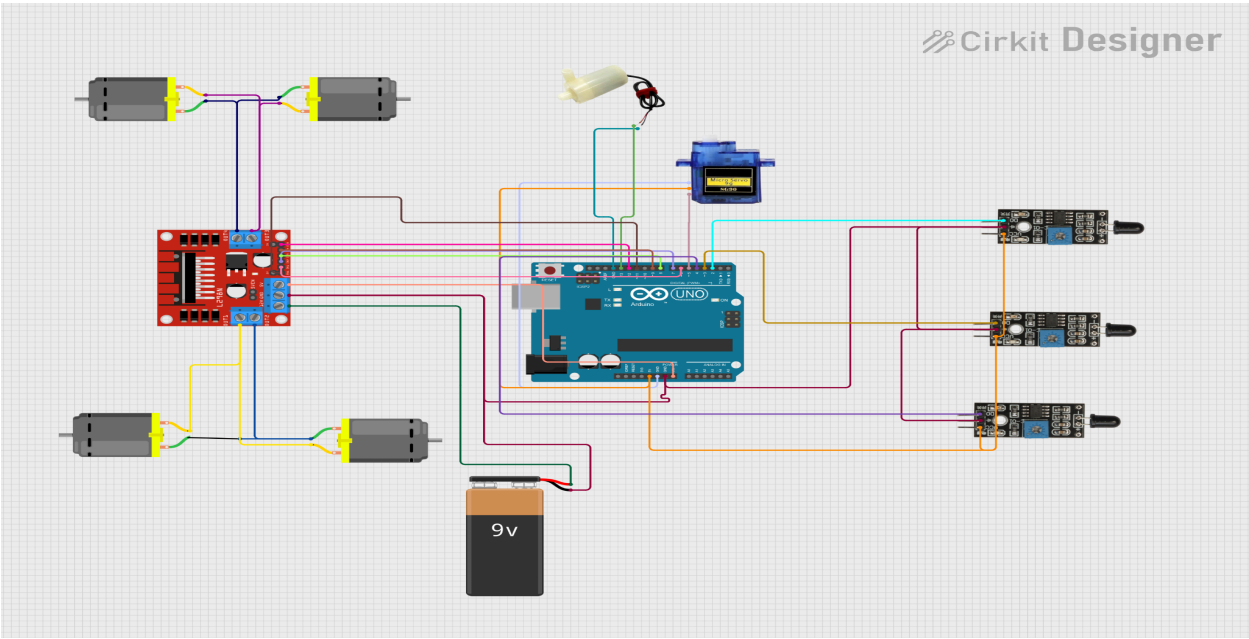

Segment 7: Project Steps of Development

Step 1: Module Identification

- Divided the project into modules: sensing, control, actuation, power, and structure.

Step 2: Sensor Testing

- Tested IR 3-pin flame sensors individually using Arduino Serial Monitor.
- Adjusted sensitivity using the onboard potentiometer.

Step 3: Actuator Testing

- Tested each BO motor with L298N motor driver.
- Tested the mini servo motor with PWM signals.
- Tested the water pump using a TIP-122 transistor switching circuit.

Step 4: Chassis Assembly

- Assembled the I-shaped transparent chassis.
- Mounted the motors, wheels, and water tank.

Step 5: Component Mounting

- Installed Arduino UNO, breadboard, and battery on the chassis.
- Mounted sensors at the front.
- Connected jumper wires for all circuits.

Step 6: Circuit Connections

- Connected flame sensors to digital pins.
- Connected motor driver to motors and Arduino.
- Connected water pump through TIP-122 transistor with resistor and capacitor.
- Connected servo motor to PWM pin.

Step 7: Code Uploading

- Uploaded main Arduino sketch.
- Programmed logic for flame detection, movement, servo control, and pump activation

Step 8: System Calibration

- Calibrated sensor thresholds.
- Adjusted movement logic based on sensor feedback
- Checked servo aiming angle and water pump spray direction.

Step 9: Final Testing

- Tested robot in real conditions using a lighter/candle.
- Verified fire detection, movement toward fire, and extinguishing action.
- Ensured all modules work together autonomously.

Segment-8: Gantt chart

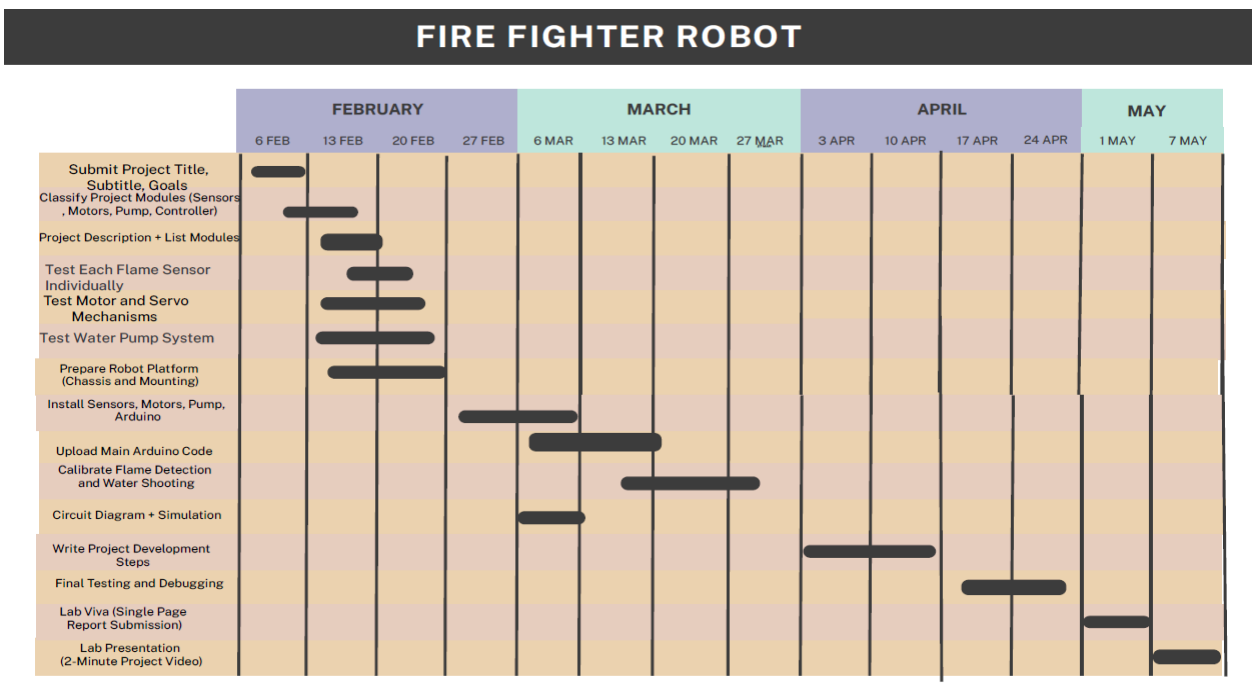

Segment-9: Budget preparation

- Arduino UNO – 650 BDT
- Chassis: Transparent I-Shaped with 1:120 Yellow - Single Axis Plastic TT Motor, Sports TPE Plastic Wheel -750 BDT
- IR 3-Pin Flame Sensors (3 pcs × 60 BDT) – 180 BDT
- L298N Dual H-Bridge Motor Driver – 250 BDT
- 3.7V Li-ion Batteries (2 pcs) – 300 BDT
- SG90 Mini Servo Motor – 180 BDT
- 5–9V Mini Water Pump – 250 BDT
- Water Pipe - 30 BDT
- Water Tank/Bottle – 0 BDT(Reused)
- Solder - less Breadboard – 100 BDT
- Jumper Wires and Wires – 130 BDT
- TIP-122 Transistor + 104 pf Capacitor + 1K Resistor – 60 BDT
- Double Slot Li-ion Battery Charger – 180 BDT

Total Estimated Cost = 3,070 BDT

Segment-10: CEP mapping

Knowledge Mapping (K):-

How Ks are addressed through the project and mapping among Ks, COs,
and POs

Ks Attribute	How Ks are addressed through your fire-fighting robot project	**COs**	**POs**

K1: Natural Sciences	Understanding IR flame sensors, motor response to power changes, basic electrical signals in microcontroller circuits (voltage, current, pulse width modulation).	CO1, CO2	PO1(a)
K2: Math & Modeling	Using logic and algorithms to map sensor readings to robot movement; mathematical modeling of PID-based control; distance-angle calculation for fire direction.	CO3	PO3 (c)
K3: Engineering Fundamentals	Applying interfacing knowledge (e.g., sensor-to-microcontroller), circuit connections, signal flow, motor control logic.	CO1, CO3	PO1 (a), PO3 (c)
K4: Specialist Knowledge	Working with I/O interfacing standards like digital sensor inputs, servo PWM, transistor-based actuation for pump, and flame sensor	CO1, CO2, CO3	PO1 (a), PO5 (e)

	arrangement.		
K5: Design Knowledge	Designing the circuit layout, control algorithms, and mechanical structure for servo-pump alignment, efficient fire suppression path planning	CO5	PO2 (b), PO5 (e)
K6: Engineering Practice	Practical implementation of flame detection, servo actuation, motor movement, and pump triggering through Arduino on a robot chassis.	CO3, CO4, CO5	PO2 (b), PO5 (e)
K7: Society & Ethics	Consideration of safety in design (overheating, false detection), emergency fire response application, and ethical innovation to protect life and property.	CO4	PO2 (b), PO6
K8: Research Literature	Referring to sensor datasheets, Arduino libraries, transistor control documentation, and circuit design references for decision-making	CO4, CO5	PO2 (b), PO5 (e)

	and integration.		

Complex Engineering Problems (P's), CO and PO Mapping:-

P's Attribute	How P's Are Addressed Through the Project	CO	PO
P1: Depth of Knowledge Required	Requires comprehensive understanding of flame sensor calibration, PID control for motor movements, servo positioning, pump actuation logic, and integration for autonomous fire response.	CO1, CO2, CO3	PO1 (a), PO2 (b), PO7
P3: Depth of Analysis	Analyzing sensor data under varying distances, angles, and fire intensities;	CO1, CO2, CO3	PO1 (a), PO2 (b), PO3 (c)

	optimizing motor and pump control; evaluating response time and error margin.		
P4: Familiarity of Issues	Addressing challenges like real-time fire detection, interference, servo failure, false triggers, environmental light conditions, and response delay.	CO2, CO3	PO2 (b), PO3 (c), PO5 (e)
P7: Interdependence	Integration of multiple subsystems (sensor array, control algorithm, mobility, servo, water pump) to work reliably under test scenarios.	CO3, CO5, CO9	PO1 (a), PO2 (b), PO7

Complex Engineering Activities (A's), CO and PO Mapping:-

A's Attribute	How A's Are Addressed Through the Project	CO	PO
A1: Range of Resources	Uses microcontroller (Arduino), IR flame sensors, servo motors, L298 driver, water pump, transistor switch circuits, battery, breadboard, and test tracks.	CO1, CO3	PO1 (a), PO2 (b), PO7
A3: Innovation Required	Designed unique sensor arrangement for better flame localization; developed adaptive control logic for robot response and servo-pump coordination.	CO2, CO3, CO8	PO3 (c), PO4
A4: Consequences for Society	Provides insight into robotic fire response technology for domestic/industrial safety; promotes sustainable engineering practices and safety education	CO6, CO8	PO6, PO7

Segment-11: References:-

Arduino UNO R3 –. https://www.arduino.cc/en/Main/ArduinoBoardUno

Fire Fighting Robot Using Arduino. Retrieved https://quartzcomponents.com/blogs/electronics-projects/fire-fighting-robot-using-arduino

Fire Fighter Robot using Arduino. https://techatronic.com/fire-fighter-robot-using-arduino-fire-fighting-robot/

Fire Fighting Robot Using Arduino | Step-by-step Tutorial

YouTube. https://youtu.be/jsvAL9ogFBw

CSE 315 Peripheral and Interfacing Lecture Notes

BOOK -

Title**:** *Ultimate Guide for Arduino Sensors/Modules*

Authors**:** Rui Santos and Sara Santos