E Plucking Unit

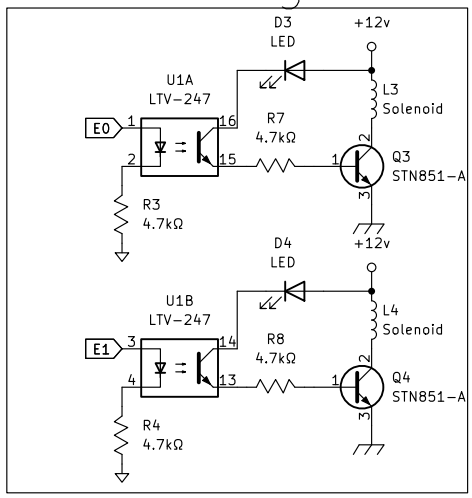

A Plucking Unit

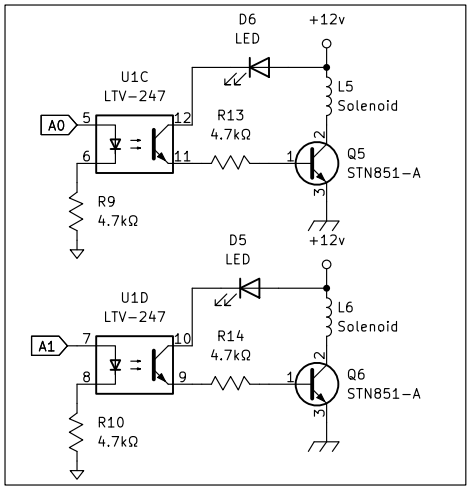

Muting Unit

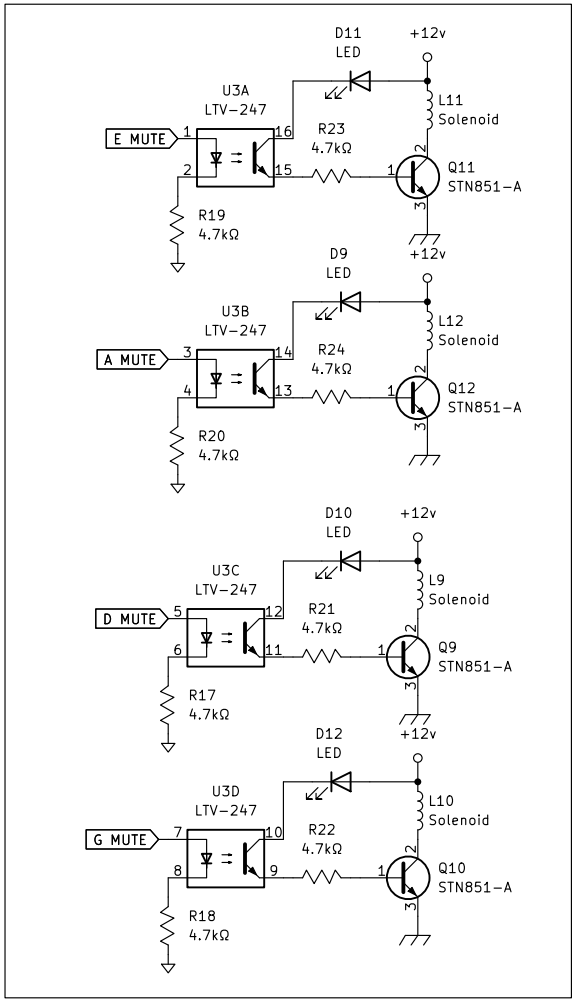

D Plucking Unit

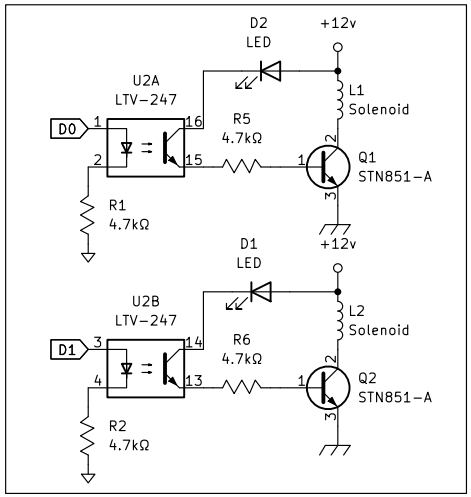

G Plucking Unit

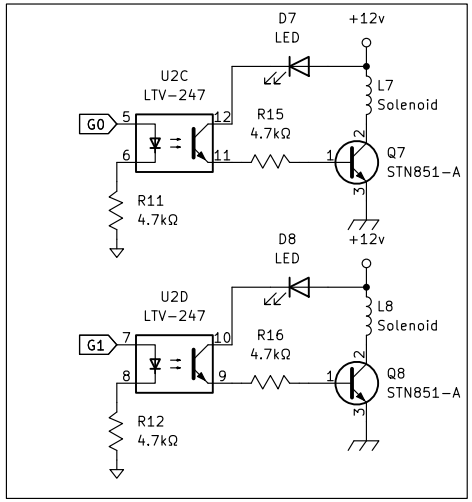

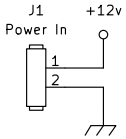

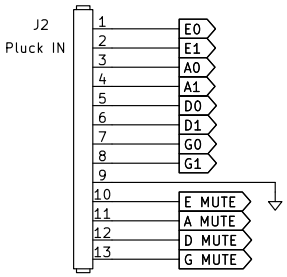

Idaho State University | Robotics & Communications Systems Engineering Technology

Robotics And Communications Systems Engineeering Technology
1152 Martin Luther King Jr. Blvd
Pocatello, ID 83209
Drawn By: Owen Fujii
Idaho State University

Sheet: /
File: Small Unit Breakout.kicad_sch

Title: Smaller Breakout

Size: A	Date: 2025-03-11	**Rev: A**
KiCad E.D.A. 9.0.0		Id: 1/1