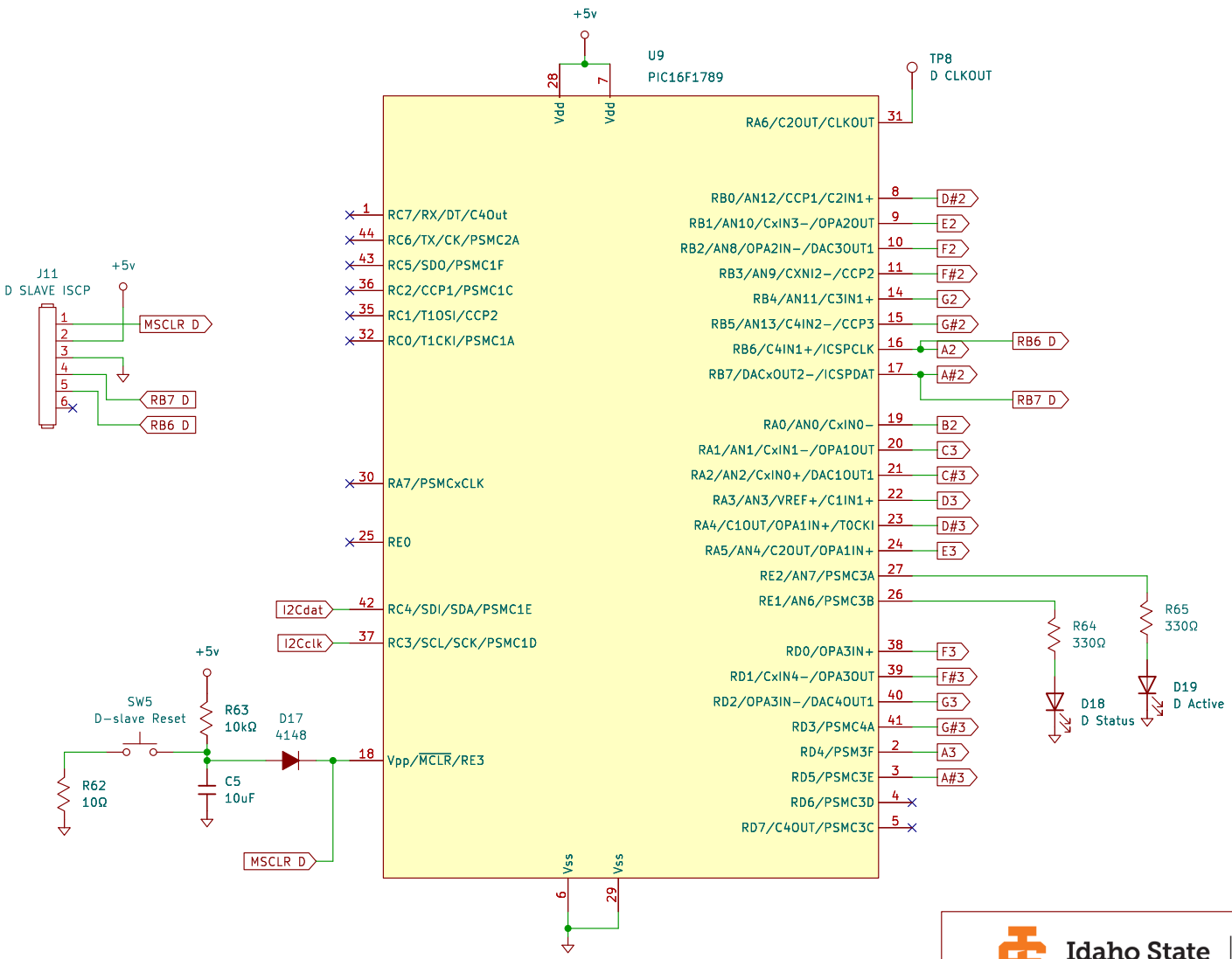

D Solenoid Array

File: DSolenoidA.kicad_sch

Idaho State University | Robotics & Communications Systems Engineering Technology

Robotics And Communications Systems Engineeering Technology
1152 Martin Luther King Jr. Blvd
Pocatello, ID 83209
Drawn By: Owen Fujii
Idaho State University

Sheet: /D String Slave/
File: Dslave Sch.kicad_sch

Title: D-Slave Processor Schematic

Size: A	Date: 2024-12-10	**Rev: A**
KiCad E.D.A. 8.0.6		Id: 7/13