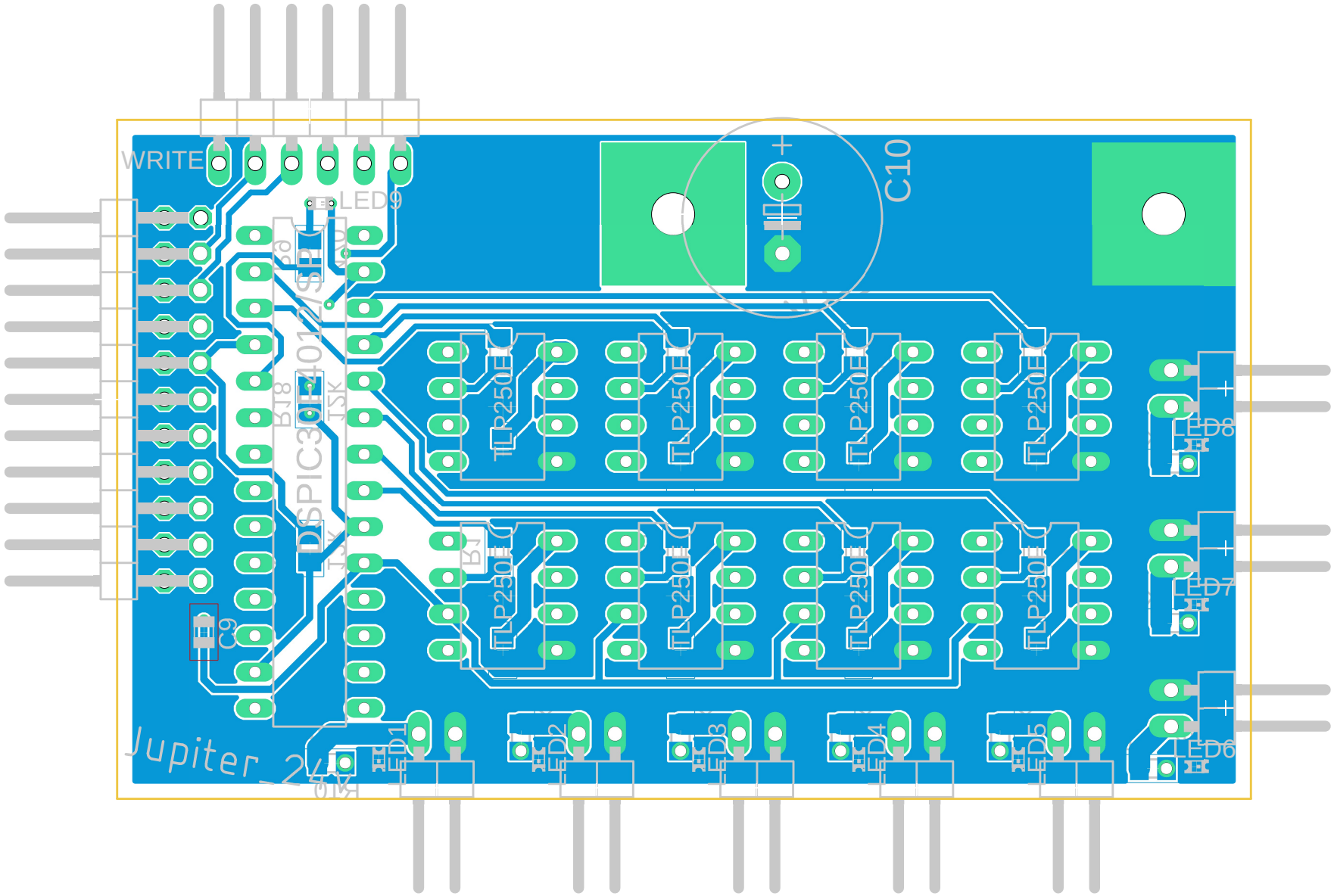


2026/01/30 17:34 f=2.50