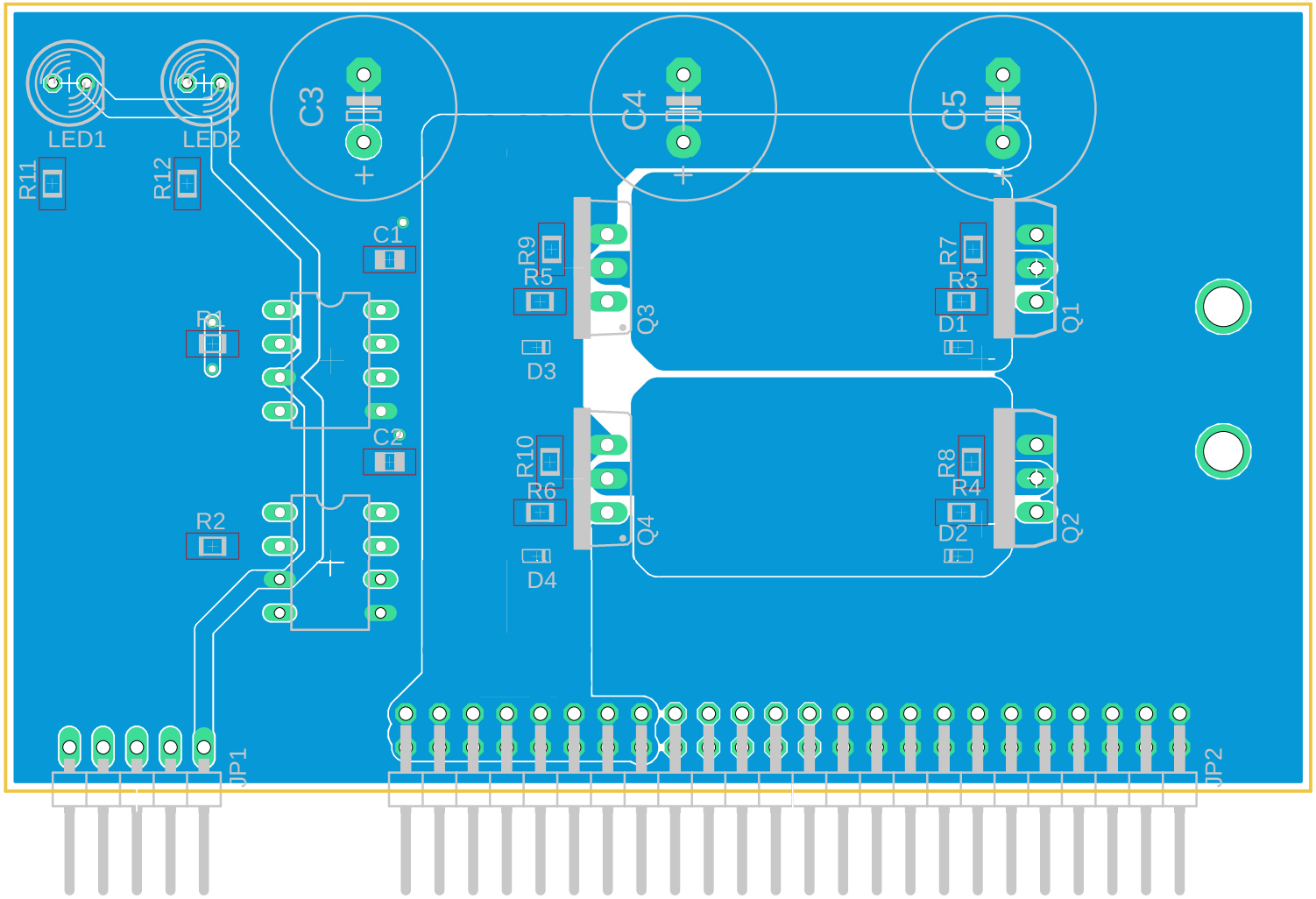

2026/01/30 17:59 f=2.00