REVISIONS				
REV	DESCRIPTION	DRN	APPR	DATE

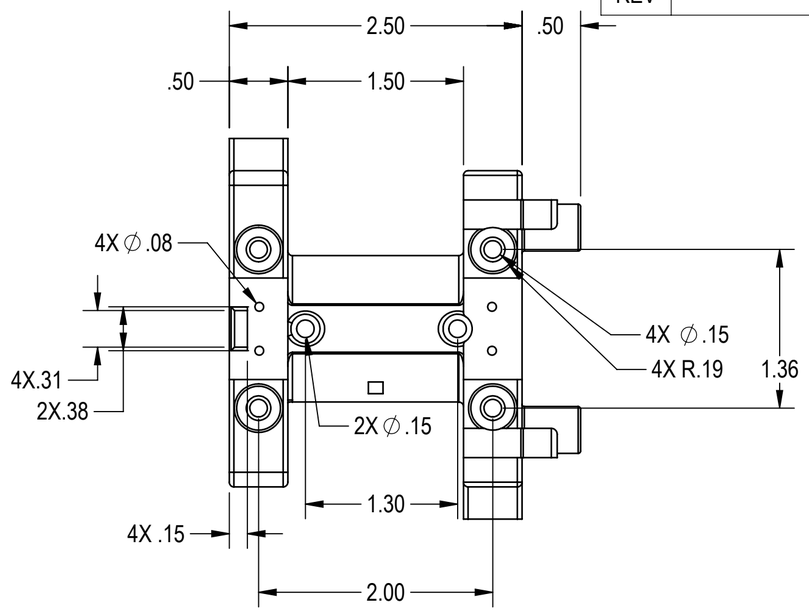

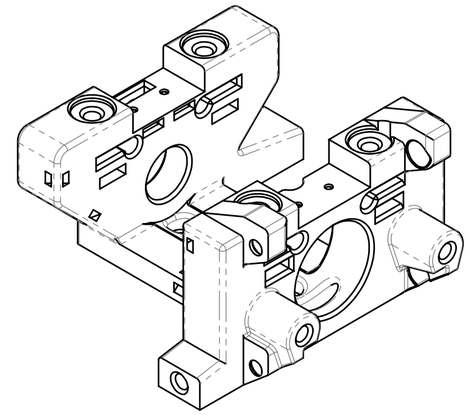

ISOMETRIC VIEW
SCALE 1:1

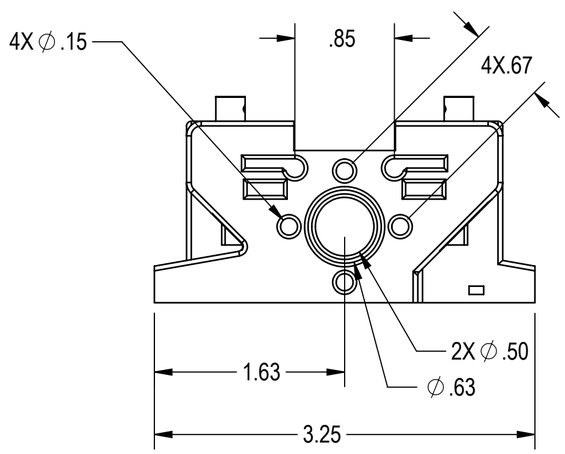

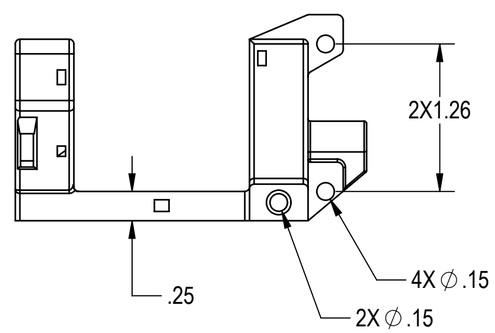

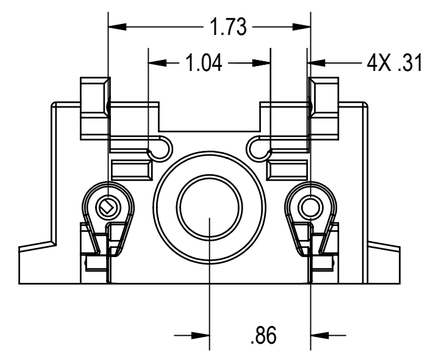

1. DIMENSIONS GIVEN ARE STRICTLY FOR REFERENCE ONLY. PART SHALL BE FABRICATED ACCORDING TO SOLID MODEL. ALL DIMENSIONS SHALL BE TAKEN OFF OF SOLID MODEL. IF DISCREPENCIES OCCURE, SOLID MODEL SHALL BE ASSUMED TO BE CORRECT.

NOTES: UNLESS OTHERWISE SPECIFIED

DO NOT SCALE DRAWING

					SCALE 2:1	SIZE C	DATE	
		UNLESS OTHERWISE SPECIFIED	.XX ± .03	.XXX ± .010	ANGLE ± 0.5 °	DRAWN: MAVB	03/22/17	DWG TITLE
		MACHINED SURFACE FINISHES 125	DIMENSIONS ARE IN INCHES			CHECKED:		Z AXIS CLEVIS
NEXT ASSY	FINAL ASSY	MACHINED FILLET RADII .015-.030	INTERPRET DRAWING PER ASME Y14.5M			REVIEWED:		DWG NO. LCSAP-302
APPLICATION		REMOVE BURRS AND BREAK SHARP EDGES	DIMENSION LIMITS HELD AFTER PLATING			APPROVED: MAVB	30/22/17	
MATERIAL POLYLACTIDE THERMOPLASTIC (PLA)		FINISH NONE				WEIGHT:		SHEET 1 OF 1 / REV 0
								FILENAME LCSAP-302.SLDDRW

DWG NO. LCSAP-302 REV 0