REVISIONS				
REV	DESCRIPTION	DRN	APPR	DATE

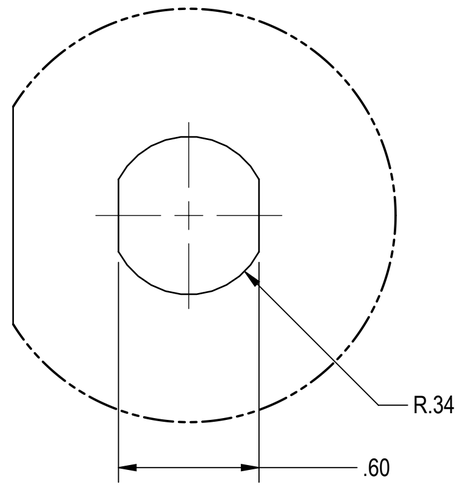

DETAIL D
SCALE 2 : 1

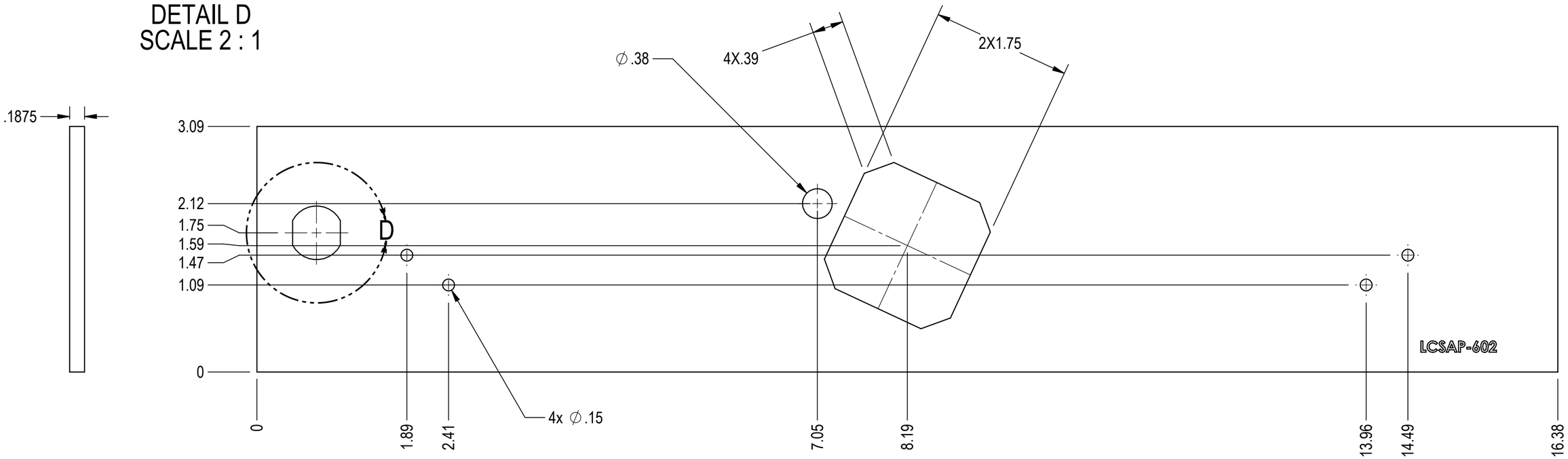

1. DIMENSIONS GIVEN ARE STRICTLY FOR REFERENCE ONLY. PART SHALL BE FABRICATED ACCORDING TO DXF FILE GAINED FROM SOLID MODEL. ALL DIMENSIONS SHALL BE TAKEN OFF OF DXF GAINED FROM SOLID MODEL. IF DISCREPENCIES SHOULD OCCUR, DXF FILE SHALL BE ASSUMED TO BE CORRECT.

2. HIDDEN LINES HAVE BEEN REMOVED FOR CLARITY. ALL HOLES ARE TO BE THROUGH ENTIRE THICKNESS UNLESS OTEHRWISE SPECIFIED.

NOTES: UNLESS OTHERWISE SPECIFIED

DO NOT SCALE DRAWING

					SCALE 1:1	SIZE C	DATE	
		UNLESS OTHERWISE SPECIFIED	.XX	.XXX	ANGLE	DRAWN: MAVB	03/22/17	DWG TITLE
			± .03	± .010	± 0.5 °	CHECKED:		FRONT VERTICAL PLATE
		MACHINED SURFACE FINISHES 125	DIMENSIONS ARE IN INCHES			REVIEWED:		DWG NO. LCSAP-602
NEXT ASSY	FINAL ASSY	MACHINED FILLET RADII .015-.030	INTERPRET DRAWING PER ASME Y14.5M			APPROVED: MAVB	30/22/17	
APPLICATION		REMOVE BURRS AND BREAK SHARP EDGES	DIMENSION LIMITS HELD AFTER PLATING			WEIGHT:		
MATERIAL ACRYLIC SHEET, BLACK, 85% OPACITY OR GREATER, .1875 (3/16) THK		FINISH NONE						SHEET 1 OF 1 / REV 0 / FILENAME LCSAP-602.SLDDRW

DWG NO. LCSAP-602 REV 0