REVISIONS				
REV	DESCRIPTION	DRN	APPR	DATE

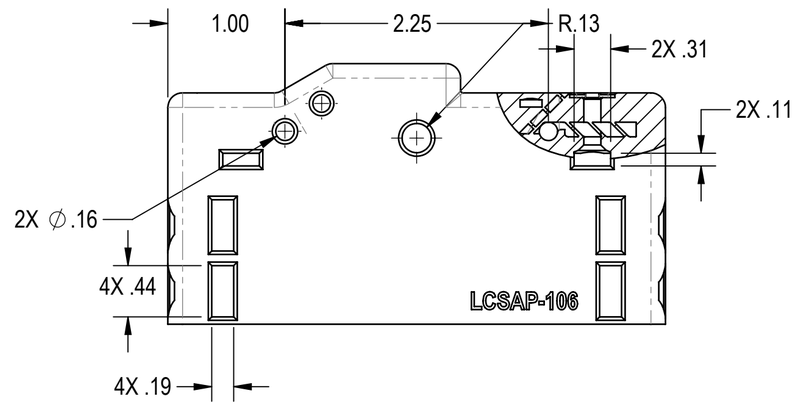

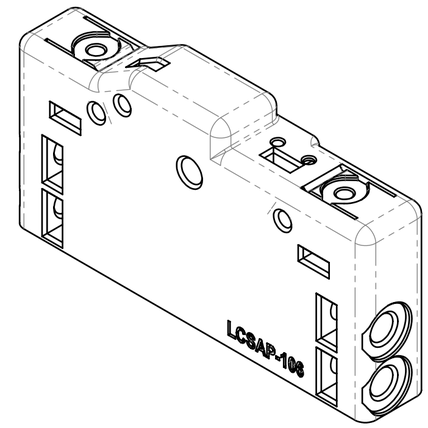

ISOMETRIC VIEW

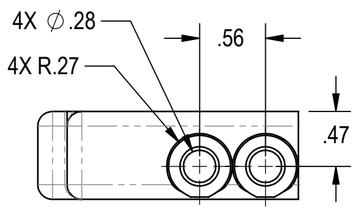

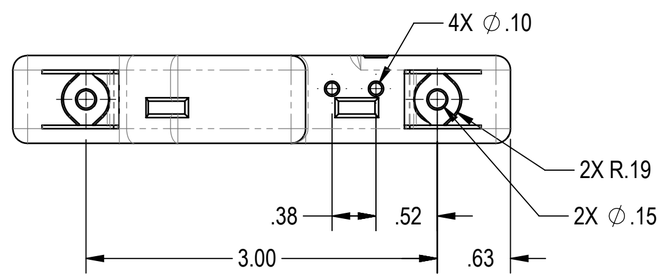

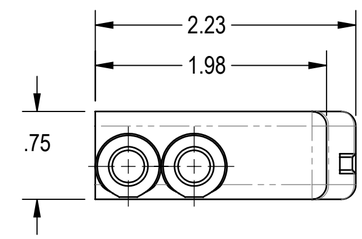

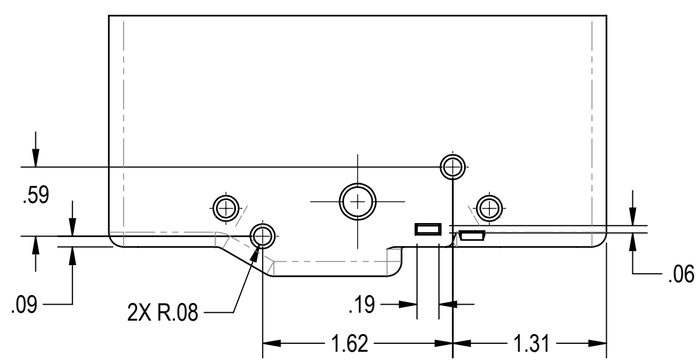

1. DIMENSIONS GIVEN ARE STRICTLY FOR REFERENCE ONLY. PART SHALL BE FABRICATED ACCORDING TO SOLID MODEL. ALL DIMENSIONS SHALL BE TAKEN OFF OF SOLID MODEL. IF DISCREPENCIES OCCURE, SOLID MODEL SHALL BE ASSUMED TO BE CORRECT.

NOTES: UNLESS OTHERWISE SPECIFIED

DO NOT SCALE DRAWING

					SCALE 1:1	SIZE C	DATE	
		UNLESS OTHERWISE SPECIFIED	.XX ± .03	.XXX ± .010	ANGLE ± 0.5 °	DRAWN: MAVB	03/22/17	DWG TITLE
						CHECKED:		REAR CENTER FRAME BINDING BLOCK
		MACHINED SURFACE FINISHES 125	DIMENSIONS ARE IN INCHES			REVIEWED:		
NEXT ASSY	FINAL ASSY	MACHINED FILLET RADII .015-.030	INTERPRET DRAWING PER ASME Y14.5M			APPROVED: MAVB	30/22/17	
APPLICATION		REMOVE BURRS AND BREAK SHARP EDGES	DIMENSION LIMITS HELD AFTER PLATING			WEIGHT:		
MATERIAL POLYLACTIDE THERMOPLASTIC (PLA)		FINISH NONE						

DWG NO. LCSAP-106

SHEET 1 OF 1

FILENAME LCSAP-106.SLDDRW

REV 0

DWG NO. LCSAP-106

REV 0