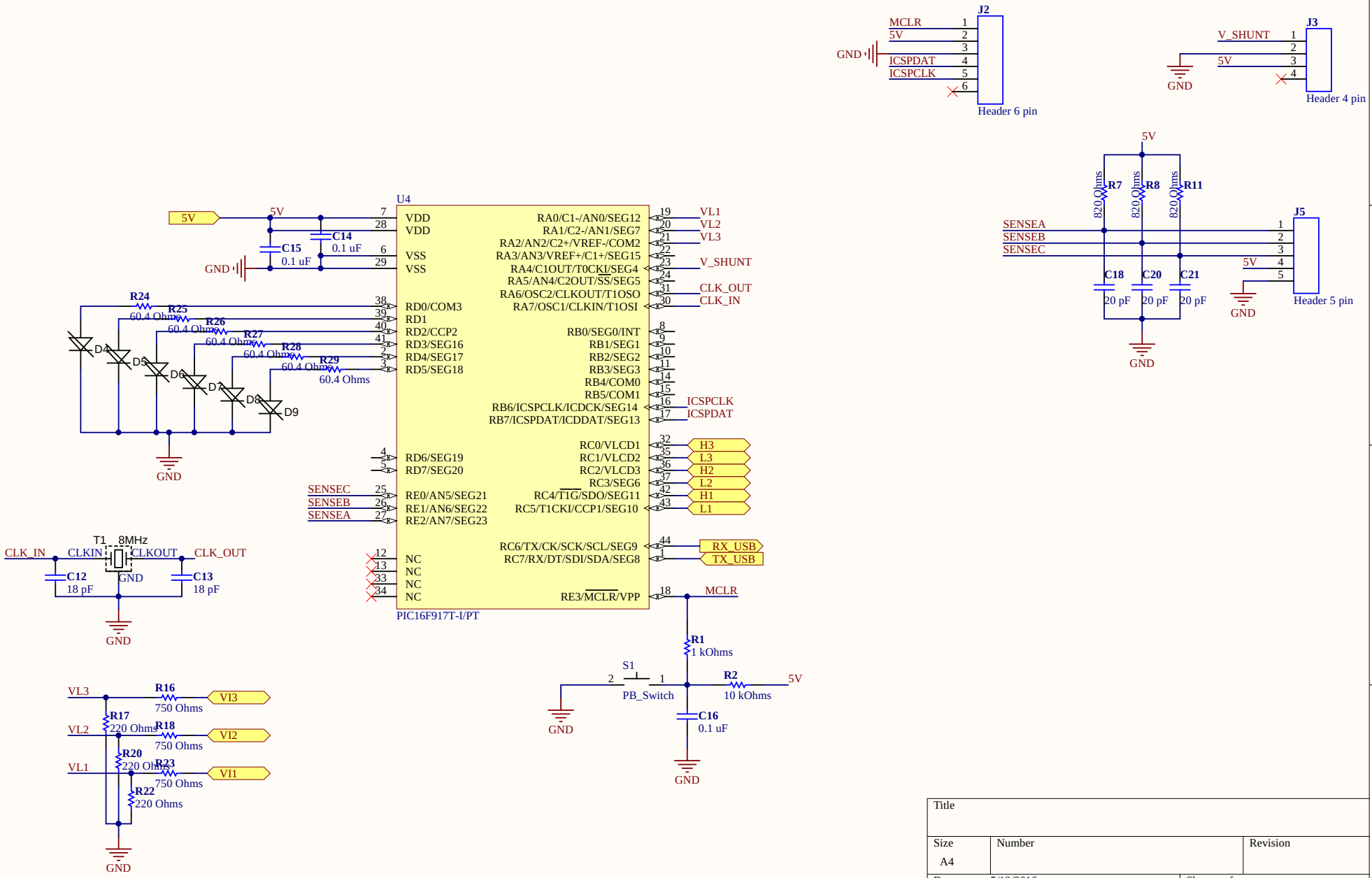

Title		
Size A4	Number	Revision
Date: 5/12/2016		Sheet of
File: C:\Users\..\MotorMCU.SchDoc		Drawn By: