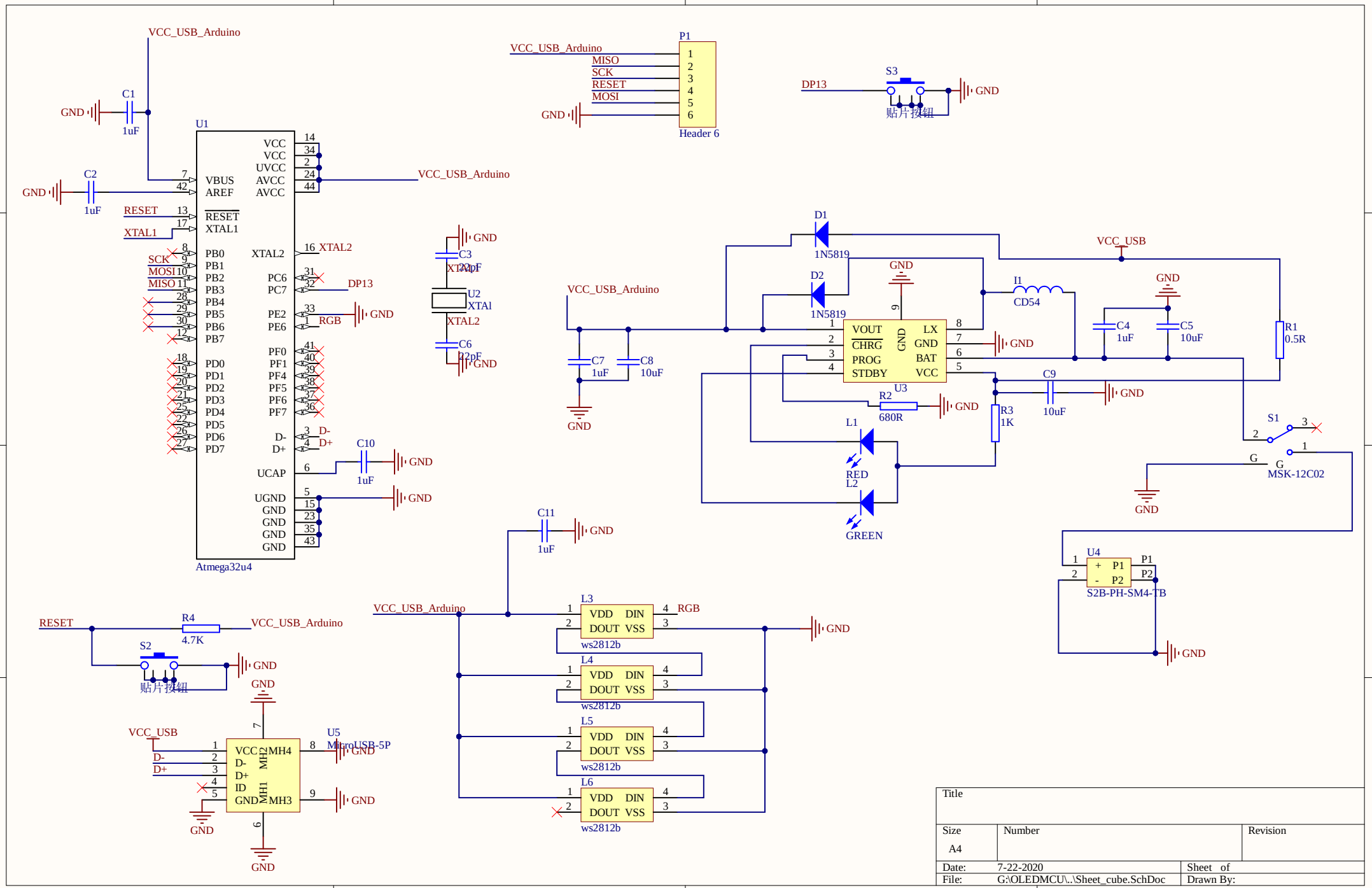

Title		
Size A4	Number	Revision
Date: 7-22-2020		Sheet of
File: G:\OLEDMCU\..\Sheet_cube.SchDoc		Drawn By: