Foldable Arm Mechanism

Aim: Design a foldable arm mechanism that allows each of the four motor arms to fold for transport and lock securely in the flight position. The arm must carry a brushless motor (approx. 250g with propeller thrust load of 2.5 kg per arm) and must not introduce play or flex in the deployed position.

Mounting Payload Attachment

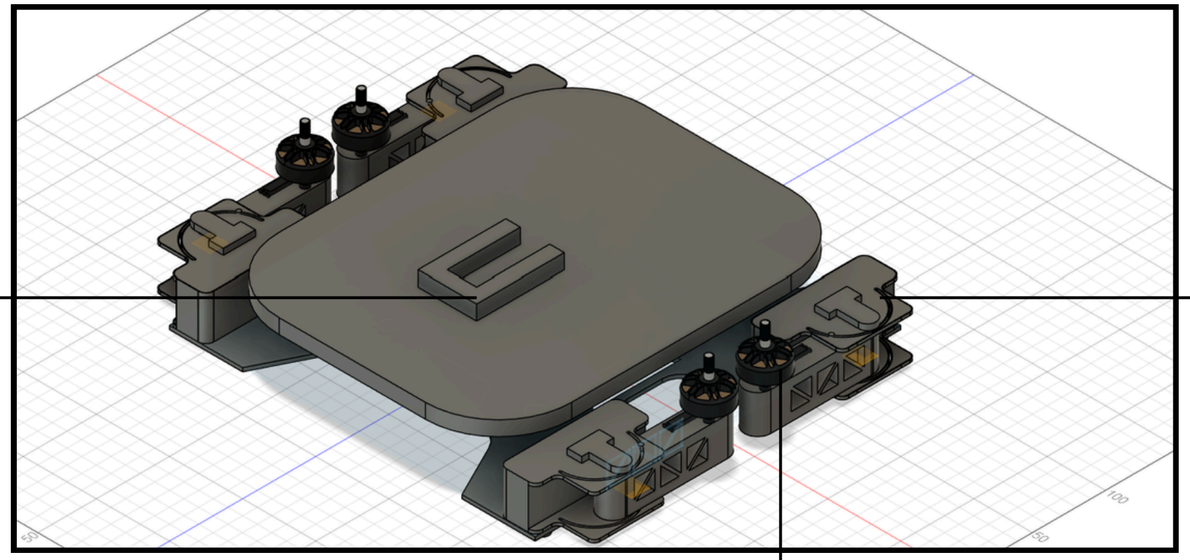

Brushless Motor

Servo Motor

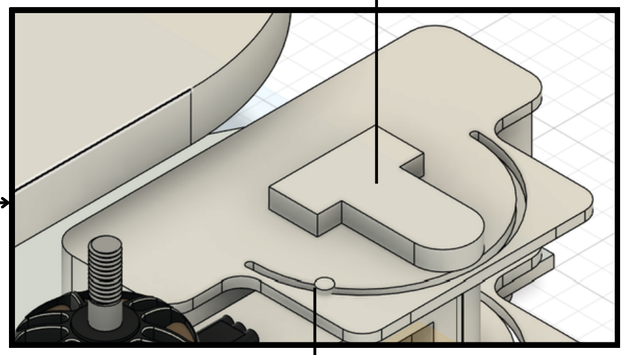

Locking Mechanism

The locking mechanism is kept at a different position than the servo motor for display purposes.

- **Locking Mechanism:** The locking pin is connected to the servo motor and is inserted in a circular slot, which is controlled electronically for different orientations.
- As long as the hinge pin is positioned so that the thrust vector creates a closing moment against that stop, the arm won't move during flight.

Parts

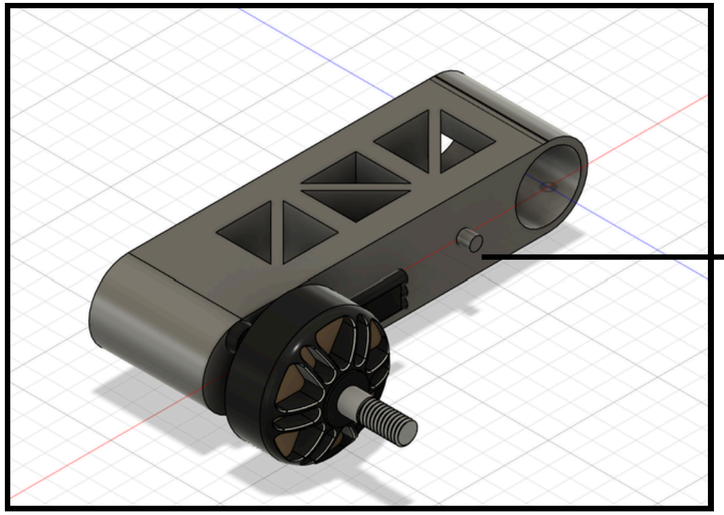

Locking Pin

WING

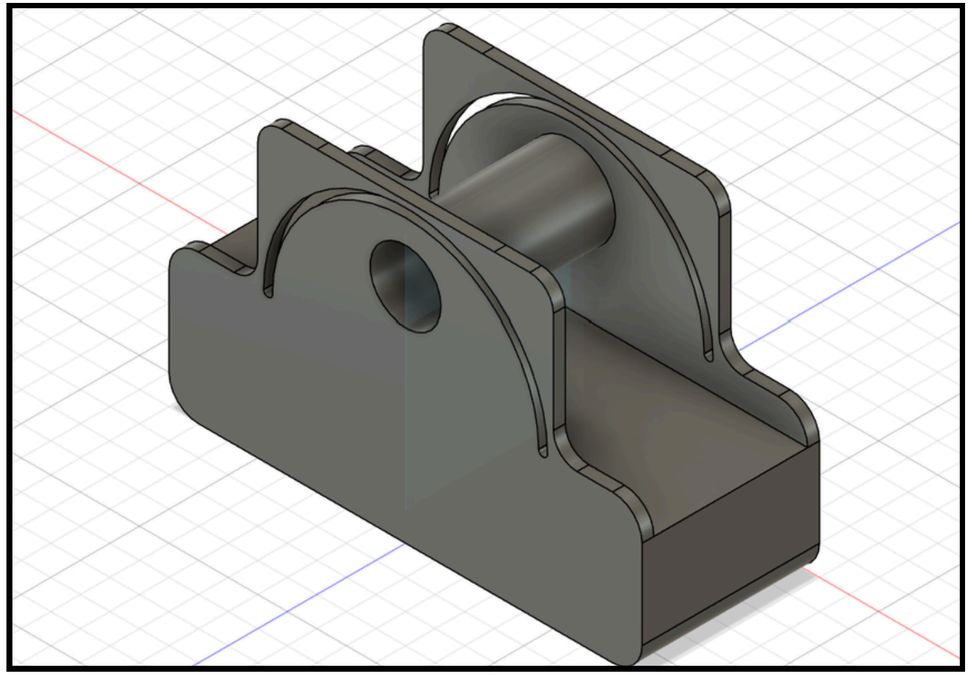

Internal hinge for drone wing

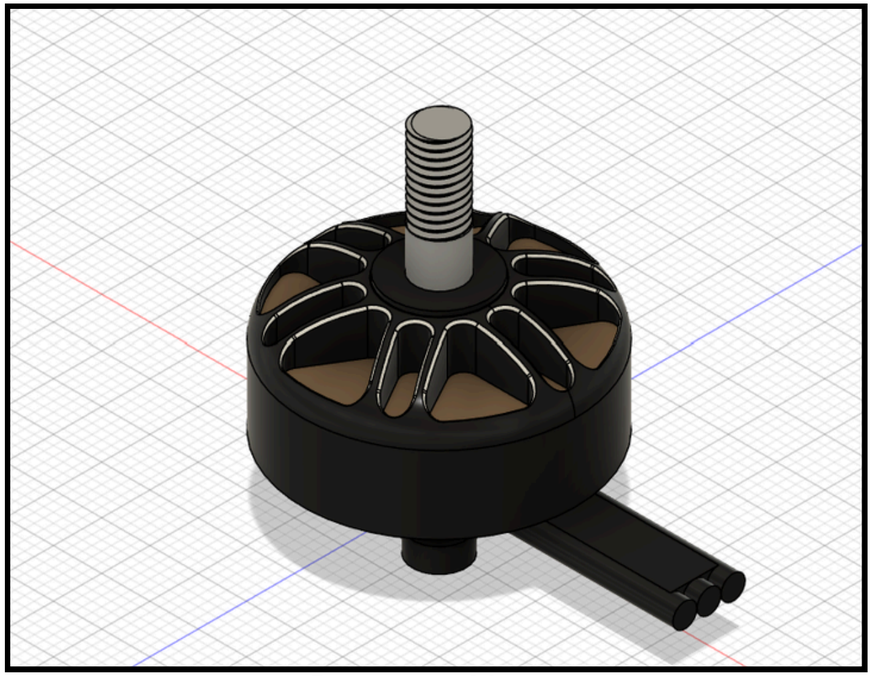

Brushless Motor

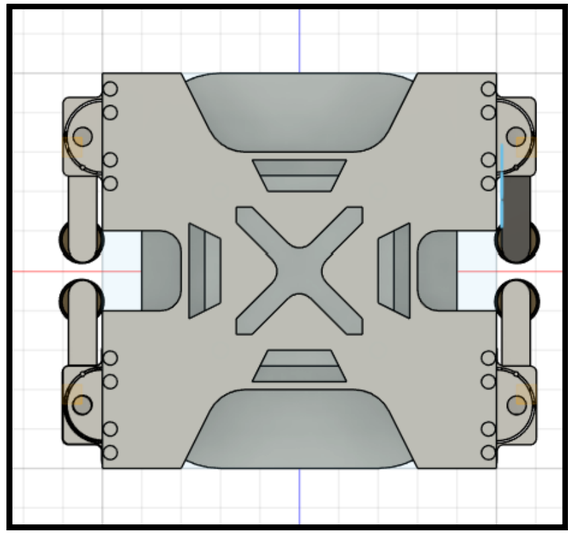

Back Side

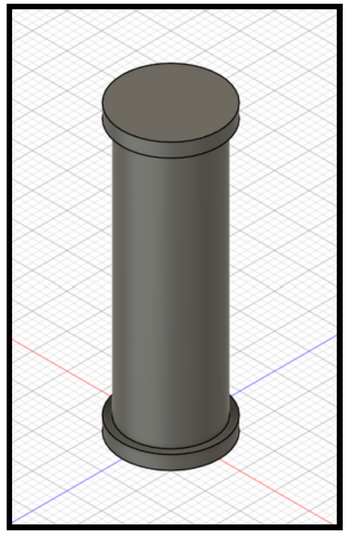

Joining Pin

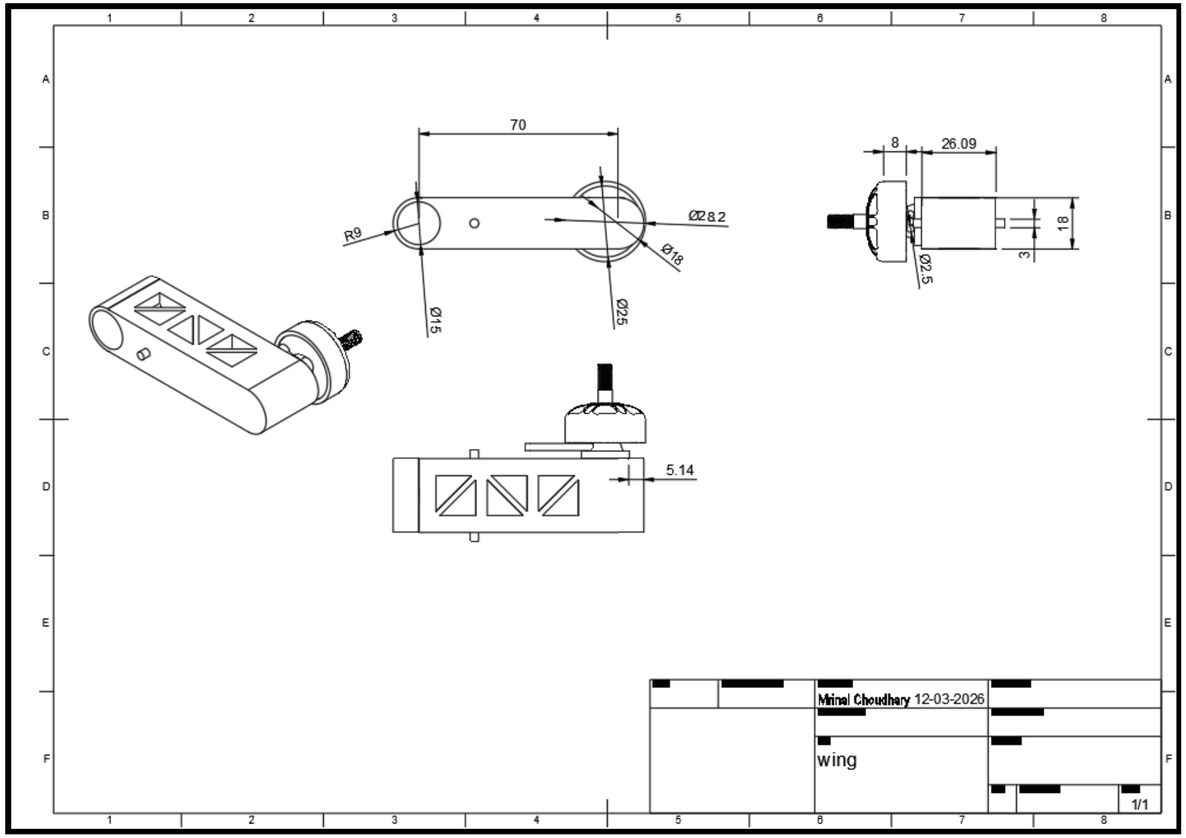
70
R9
Ø8.2
Ø18
Ø15
Ø2.5
8
26.09
18
3
Ø2.5
5.14
Mrinal Choudhary 12-03-2026
wing
1/1

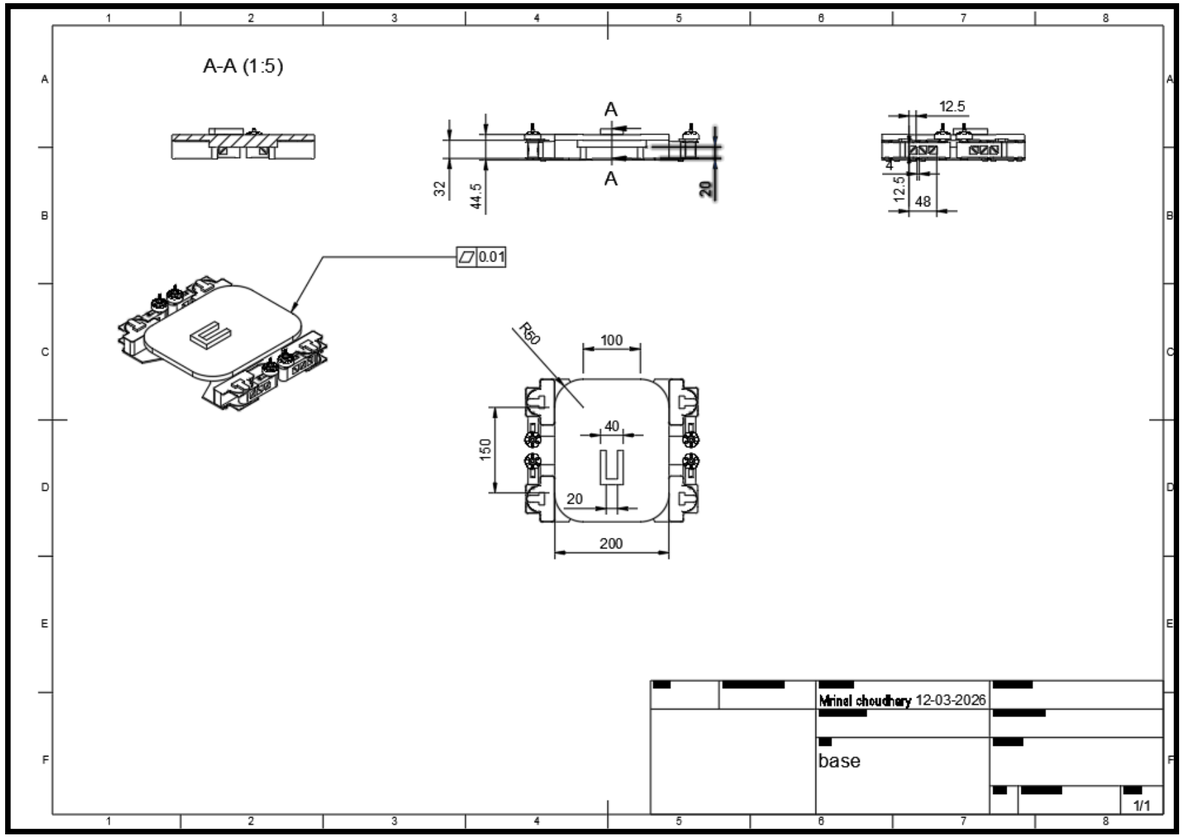
A-A (1:5)
A
A
32
44.5
20
12.5
4
12.5
48
0.01
R50
100
40
150
20
200
Mrinal choudhary 12-03-2026
base
1/1

GD&T DRAWING

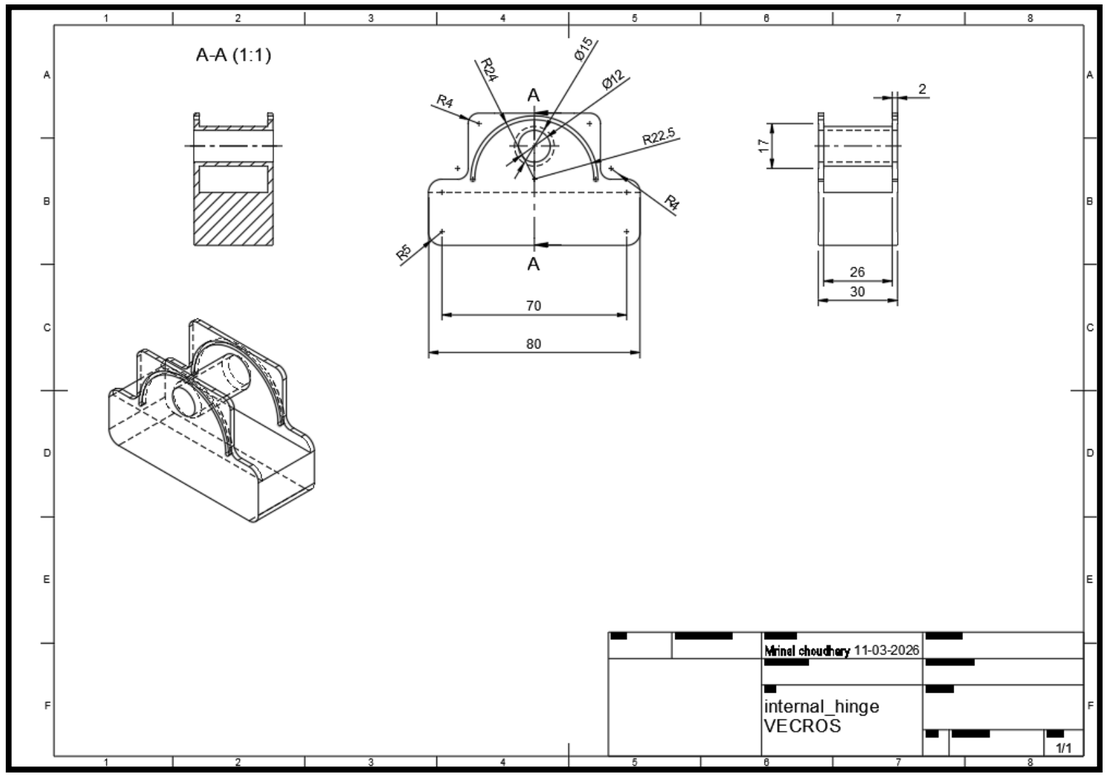

GD&T Drawing

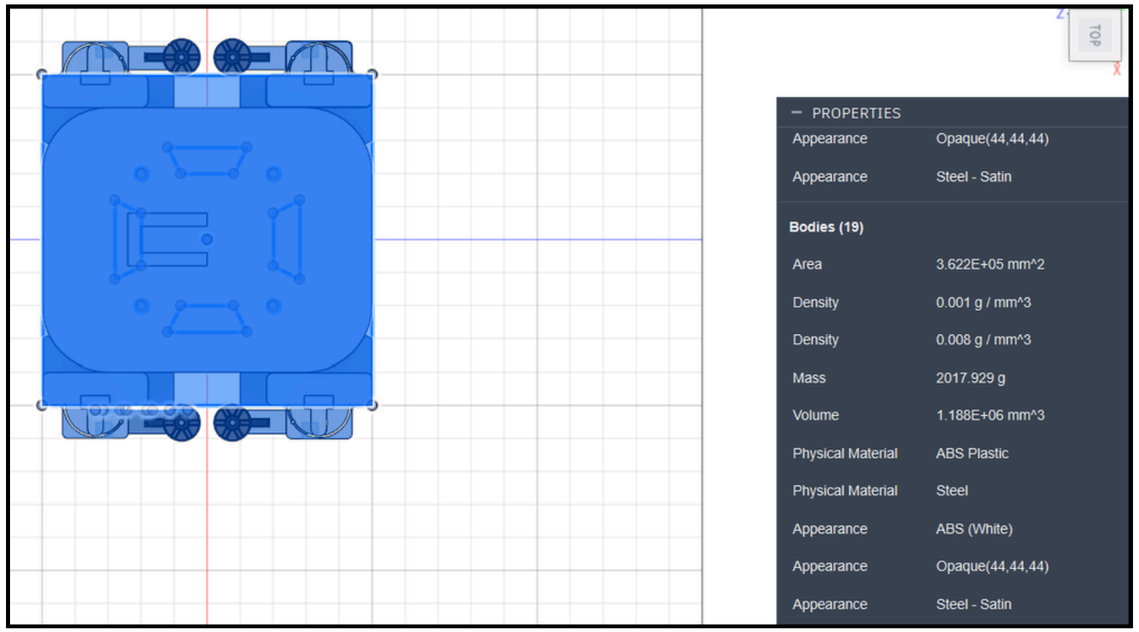

- Overall weight = 2018 g.
- Materials: ABS (for frame and wing).
- Wing weight = 207 g
- Csk nuts for attaching the internal Hinges for attaching the servo motor-enabled wing.

Thrust Load

- Thrust requirement of 2.5 kg per arm. And over weight-to-thrust ratio is **5:1.**
- Arm is ABS Plastic, a 2.5 kg load at that length.
- Steel setting for the pivot pins and reinforcing the hinge walls.
- Triangular cutouts in the arm reduce weight and torsional (twisting) stiffness.
- The motor is mounted to the side of the arm (offset mounting).
- Internal Hinge and Locking Pins are manufactured out of steel instead of ABS to avoid overall bending due to thrust.

Bending Moment & Stress at the Hinge

The motor generates a thrust of 2.5 kg, which is approximately 24.5 N.

Bending Moment (M):

M = Force x Distance = 24.5N x 0.07m = 1.715 Nm

Torque = 24.5 N x 0.0125 m = 0.306 Nm

BOM

Item	Part Name	Quantity	Material	State
1	**Base**	1	ABS	Working
2	**Internal Hinge**	7	Steel	Working
2.1	**Wing**	4	ABS	Working
3	**Brushless Motor**	1	Steel	Working
4	**Pin**	16	CSK nuts	Working

Manufacturing

Component	Material	Manufacturing Method	Reason
Main Base/Wing	**ABS Plastic**	**Industrial 3D Printing (FDM)**	Allows for the complex internal triangular trusses and servo mounting pockets.
Internal Hinge	**Steel**	**CNC Machining**	Provides a rigid, non-wearing surface for the pivot pin and absorbs the 2.5kg thrust load.
Locking Pin	**Hardened Steel**	**Off-the-shelf (OTS)**	High surface hardness prevents the pin from "notching" the circular slot over repeated cycles.

For Access to the project file please use this link

TITLE	LAST MODIFIED
base.iges	Mar 12
BOLT.iges	Mar 12
brushless_motor.iges	Mar 12
internal_hinge.iges	Mar 12
Job Assignment - Mechanical Full Time (1).pdf	Mar 12
VECROS_FILE.pdf	Mar 12
wing.iges	Mar 12