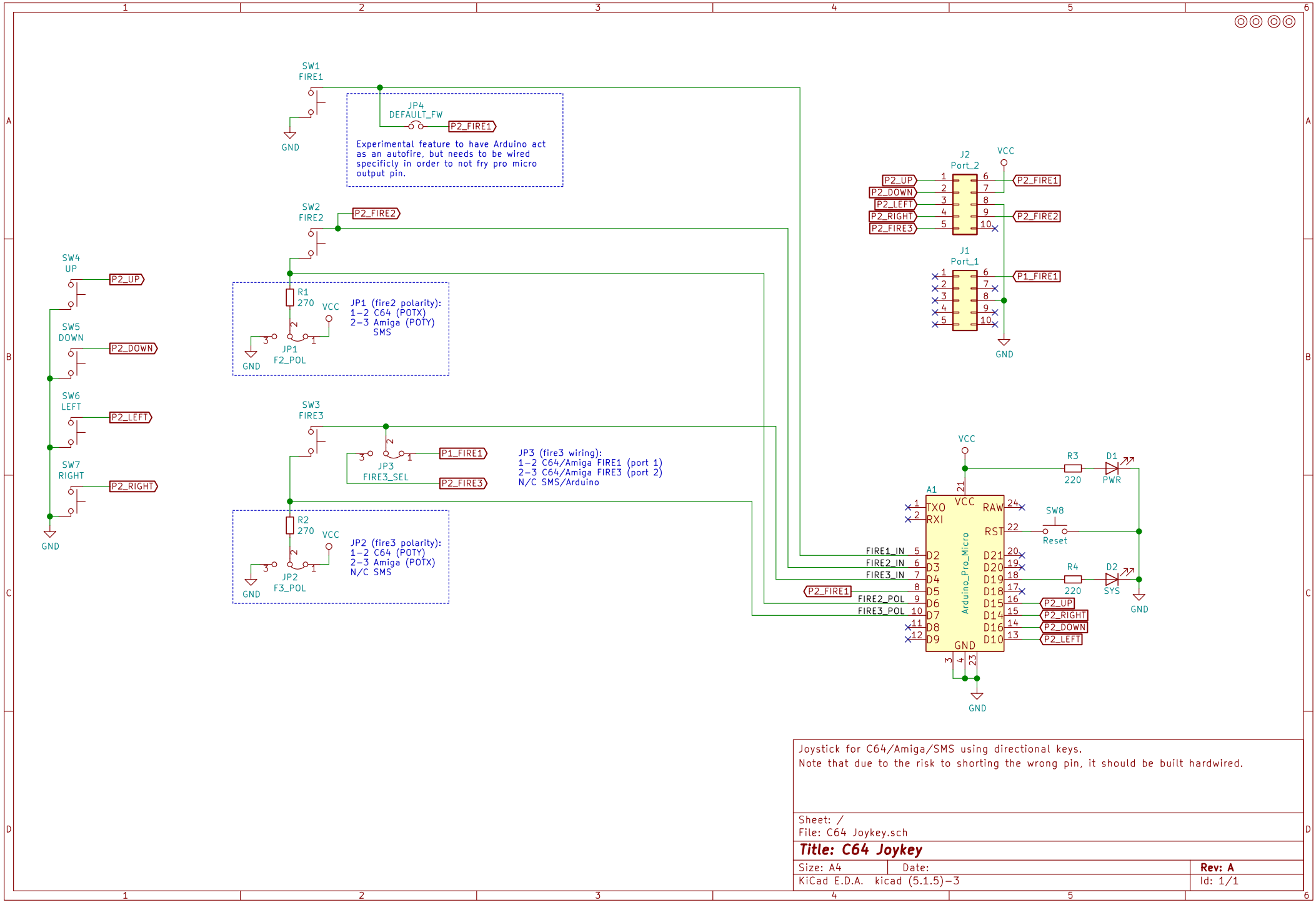

Joystick for C64/Amiga/SMS using directional keys.
Note that due to the risk to shorting the wrong pin, it should be built hardwired.

Sheet: /
File: C64 Joykey.sch

Title: C64 Joykey

Size: A4	Date:	**Rev: A**
KiCad E.D.A. kicad (5.1.5)-3		Id: 1/1