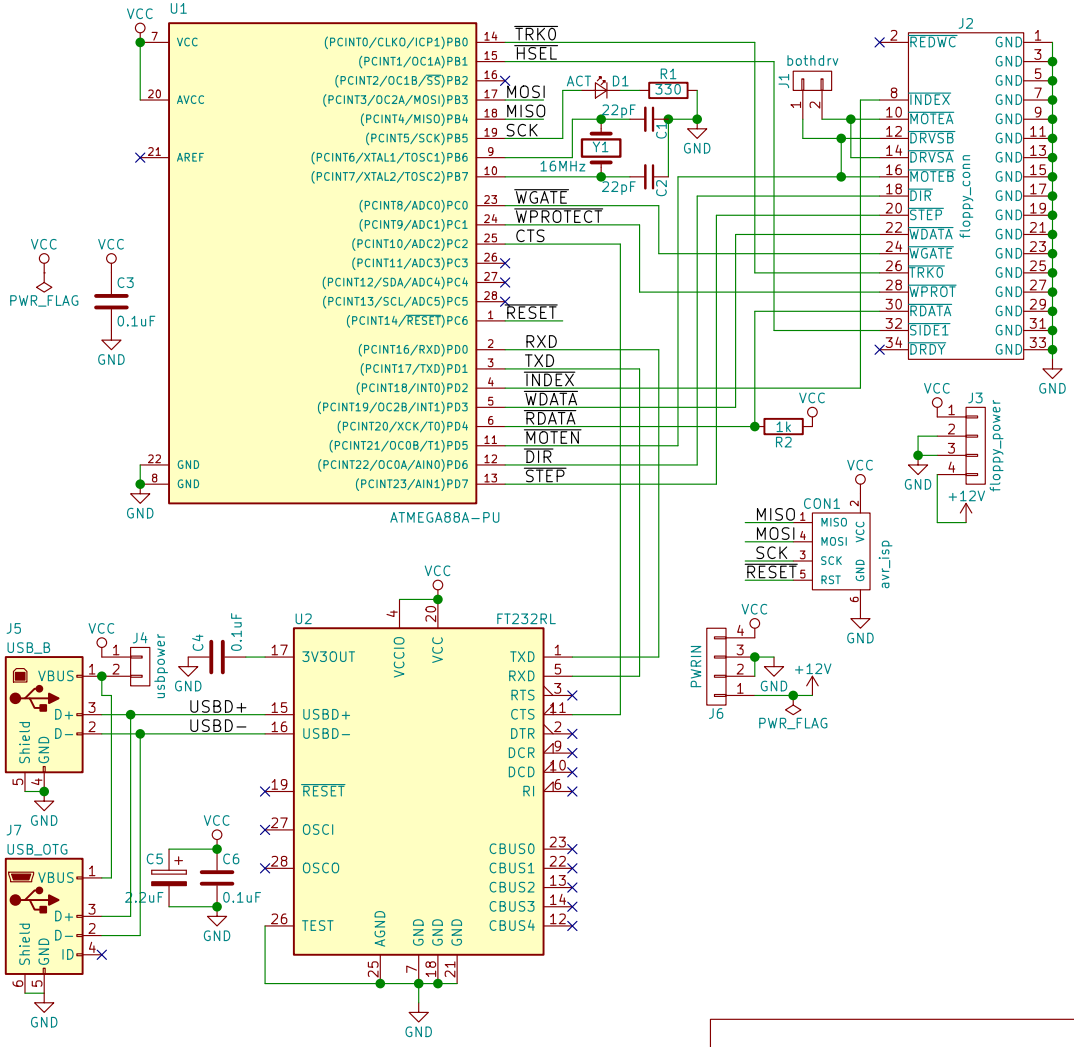

Copyright (C) John Tsiombikas 2018
Creative Commons Attribution Share-Alike (CC BY-SA)

Sheet: /
File: usbavrfloppy.sch

Title: USB amiga floppy controller

Size: A4	Date: 2018-03-01	Rev: 1
KiCad E.D.A. kicad 4.0.6+dfsg1-1		Id: 1/1