ESP INTELLIGENT ROOM

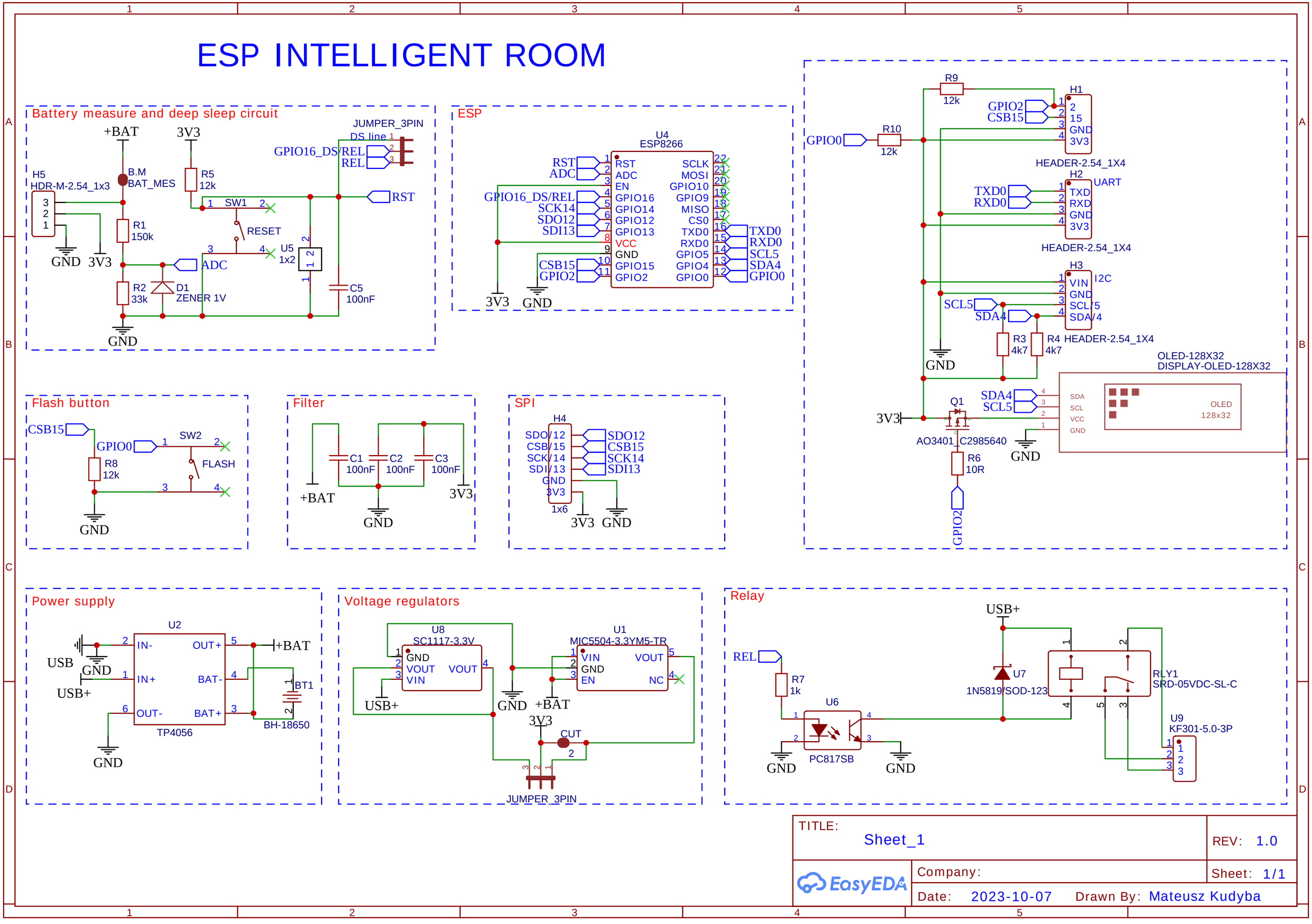

TITLE: Sheet_1	REV: 1.0
EasyEDA — Company:	Sheet: 1/1
Date: 2023-10-07	Drawn By: Mateusz Kudyba