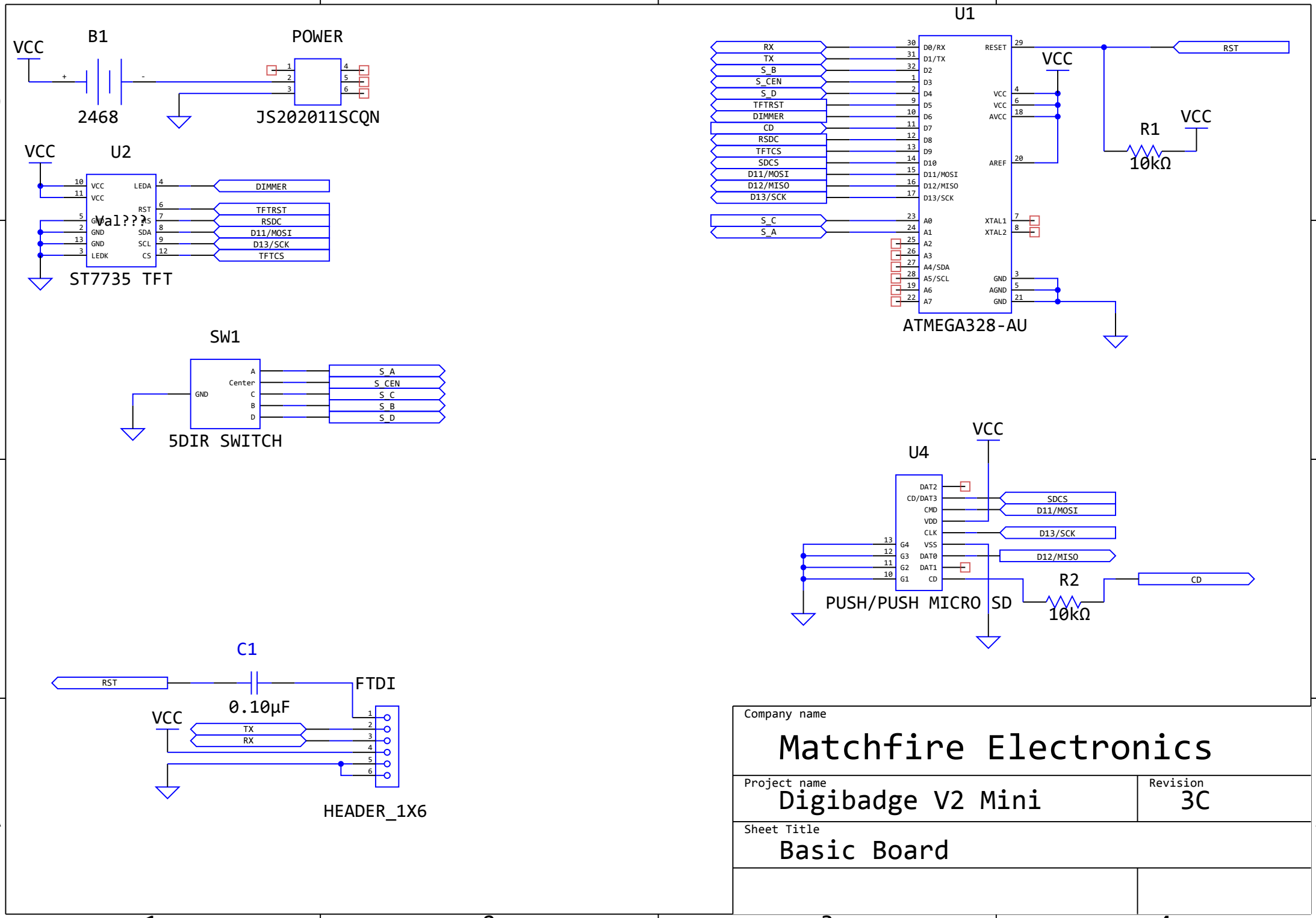

Company name

Matchfire Electronics

Project name

Digibadge V2 Mini

Revision

3C

Sheet Title

Basic Board