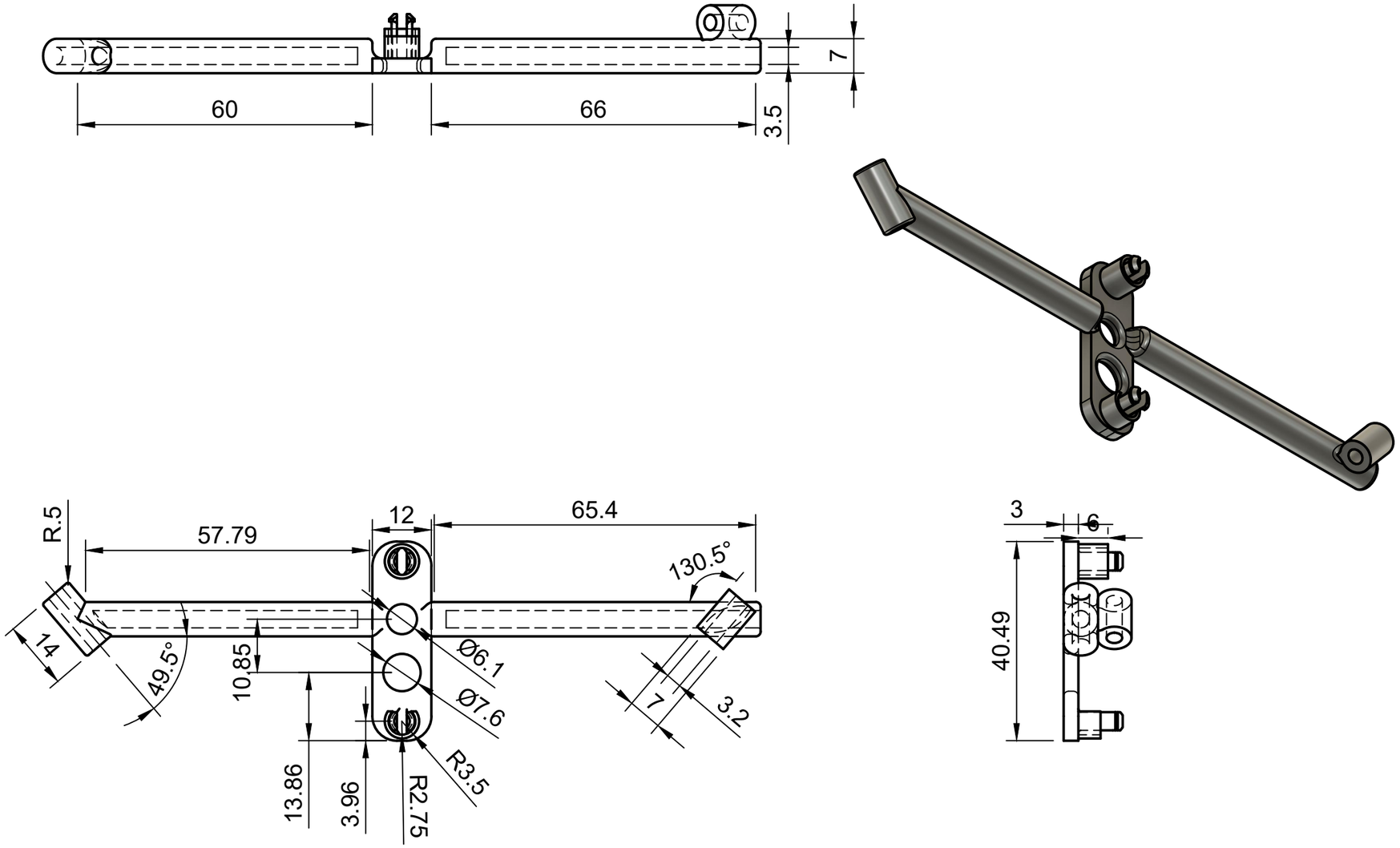

Dept.	Technical reference	Created by	Approved by
		Mateo Cortés 5/25/2023	
		Document type	Document status
		Title 5-Attache_moteur_avancer	DWG No.
			Rev. / Date of issue / Sheet 1/1