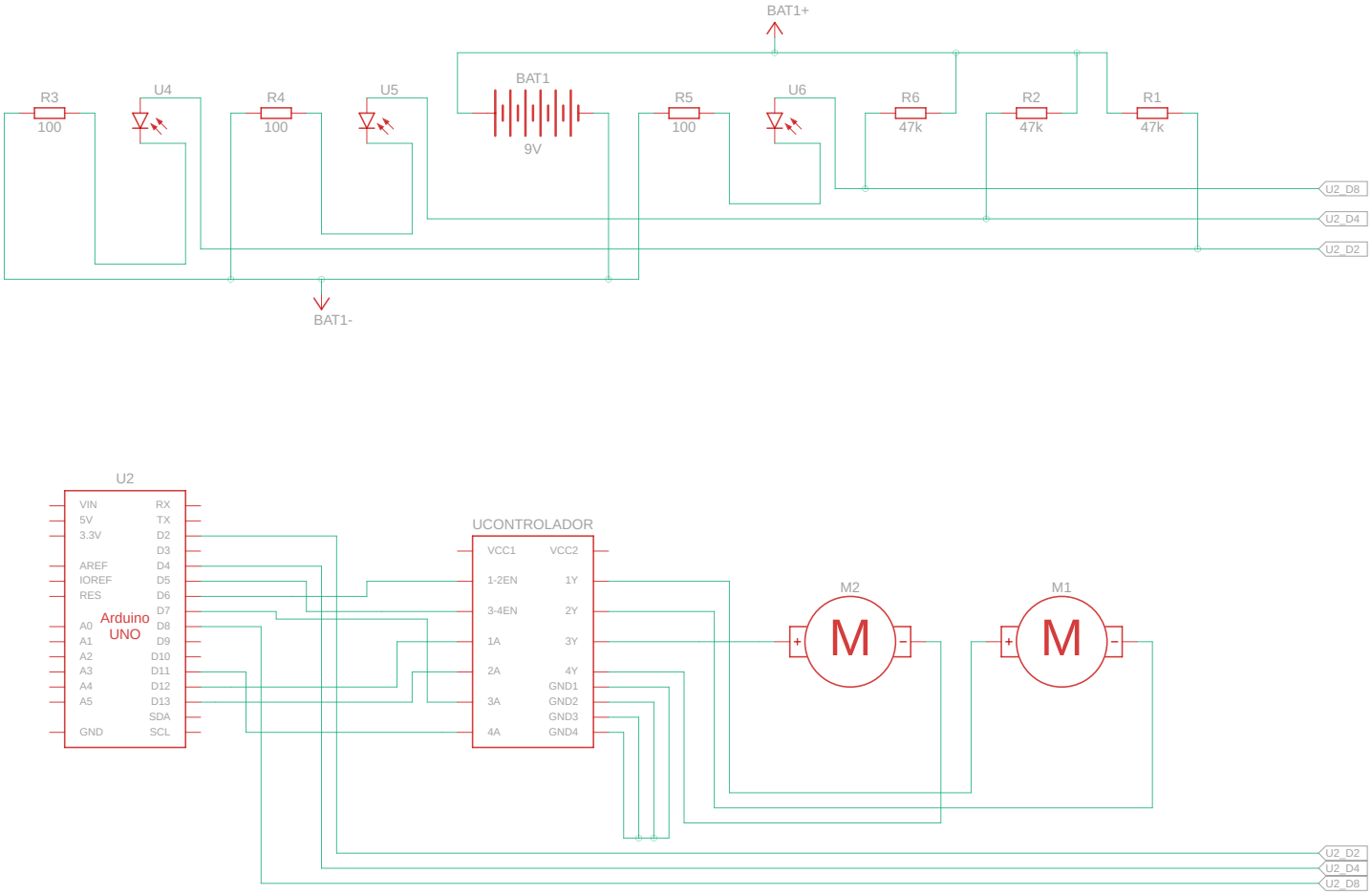

Made with Tinkercad®

Title: Neat Leelo

Date: 24/6/2025, 11:33:50 a.m.

Sheet: 1/1