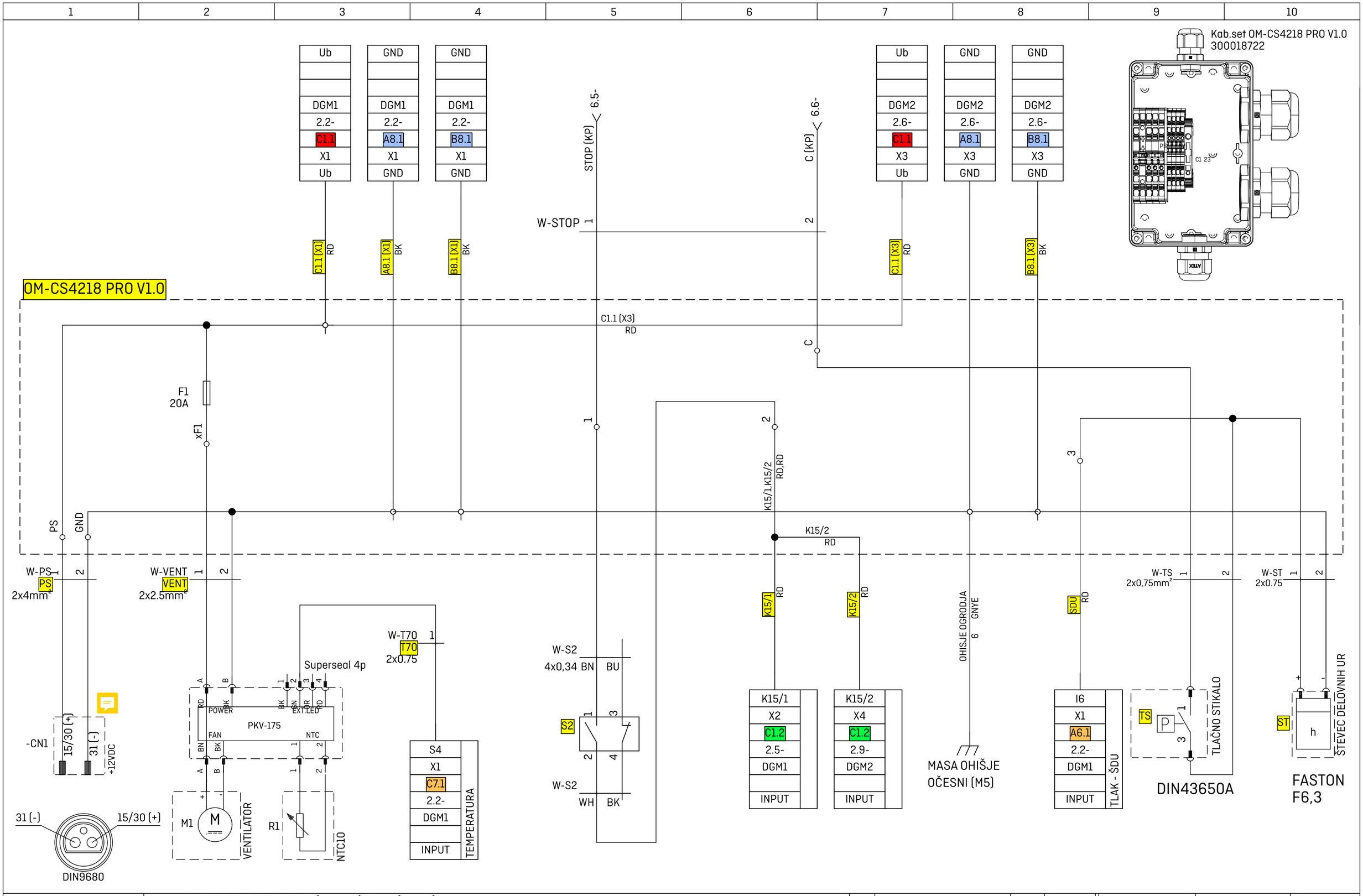

KRPAN®

Project: CS4218PRO.055.001.01 (del.hod) -final (servis) DELJENI HOD				Date: 9. 03. 2022	Wiring diagram
				Function: Editor: Andrej B.	
Other: NAPAJANJE				Location: Auditor: Andrej B.	Page: 1 / 10
Workspace description:	Page description:	Rev.:	Change	Auth.	Rev. date
				File :CS4218PRO.055.001.01 (del.hod) -final (servis)	SI

POGLED ZADAJ

X1 X2

POGLED ZADAJ

X3 X4

DGM1

200009702 - DGM ES211 (CS 4218 PRO M-A)

X1 X2

15A

	A1.1	C		NO	A1.2	5.1-
5.2-	A2.1	O2	POD. TRAK NAPREJ	NO	A2.2	5.2-
5.4-	A3.1	O4	MEC DOL	NO	A3.2	5.3-
5.5-	A4.1	O6	PODP. MIZ A NAPREJ	NO	A4.2	5.4-
5.7-	A5.1	O8	PRIJEMALO HLODA	NO	A5.2	5.5-
1.8-	A6.1	I6	TLAK - ŠDU	NO	A6.2	5.5-
4.3-	A7.1	I8	S_PODP. MIZA ZADAJ	NO	A7.2	5.6-
1.3-	A8.1	GND		NO	A8.2	5.7-
	B1.1	C		NO	B1.2	
5.1-	B2.1	O1	POGON VERIGE	C	B2.2	4.1-
5.3-	B3.1	O3	POD. TRAK NAZAJ	C	B3.2	4.2-
5.5-	B4.1	O5	MEC GOR	C	B4.2	4.3-
5.6-	B5.1	O7	PODP. MIZA NAZAJ	C	B5.2	4.5-
5.8-	B6.1	O9	ZAPORNI VENTIL	C	B6.2	4.6-
4.2-	B7.1	I7	S_PODP. MIZ A SPREDAJ	NO	B7.2	5.8-
1.4-	B8.1	GND		NO	B8.2	5.10-
1.3-	C1.1	Ub		K15/1	C1.2	1.6-
3CAN.5-	C2.1	C-H	CAN-H	GND	C2.2	4.2-
3CAN.5-	C3.1	C-L	CAN-L	GND	C3.2	4.3-
4.4-	C4.1	S1	S_MEC ZGORAJ (S1)	GND	C4.2	4.4-
4.5-	C5.1	S2	S_MEC SPODAJ (S2)	GND	C5.2	4.5-
4.6-	C6.1	S3	S_PRIJEMALO HLODA Z.	GND	C6.2	4.6-
1.4-	C7.1	S4	TEMPERATURA	GND	C7.2	5.10-
	C8.1	+5V	+5V	NO	C8.2	

DGM2

200009951 - DGM ES211 (CS 4218 PRO S-A)

X3 X4

15A

	A1.1	C		NO	A1.2	8.1-
8.2-	A2.1	O2	CEP. NAZAJ+DOD.IZP	NO	A2.2	8.2-
8.5-	A3.1	O4	DVIZNA MIZA GOR	NO	A3.2	8.3-
8.6-	A4.1	O6	SEKIRA GOR	NO	A4.2	8.4-
8.8-	A5.1	O8	TRANSP. TRAK LEVO	NO	A5.2	8.5-
6.5-	A6.1	O10	STATUS LED	NO	A6.2	8.5-
6.3-	A7.1	I8	S_DOLZINA 50	NO	A7.2	8.6-
1.8-	A8.1	GND		NO	A8.2	8.7-
	B1.1	C		NO	B1.2	8.8-
8.1-	B2.1	O1	CEP. NAPREJ	C	B2.2	6.2-
8.4-	B3.1	O3	RAZTEG TRAKA	C	B3.2	7.2-
8.5-	B4.1	O5	DVIZNA MIZA DOL	C	B4.2	7.3-
8.7-	B5.1	O7	SEKIRA DOL	C	B5.2	
8.9-	B6.1	O9	TRANSP. TRAK DESNO	C	B6.2	3CAN.8-
6.3-	B7.1	I7	S_DOLZINA 25	NO	B7.2	8.9-
1.8-	B8.1	GND		NO	B8.2	
1.7-	C1.1	Ub		K15/2	C1.2	1.7-
3CAN.6-	C2.1	C-H	CAN-H	GND	C2.2	7.3-
3CAN.7-	C3.1	C-L	CAN-L	GND	C3.2	7.4-
7.3-	C4.1	S1	S_CIL. CEP. ZADAJ (S1)	GND	C4.2	
7.4-	C5.1	S2	S_CIL. CEP. SPREDAJ (S2)	GND	C5.2	
6.2-	C6.1	S3	S_DVIZNA MIZA GOR	GND	C6.2	3CAN.7-
6.1-	C7.1	S4	S_DVIZNA MIZA DOL	GND	C7.2	
	C8.1	+5V	+5V	NO	C8.2	

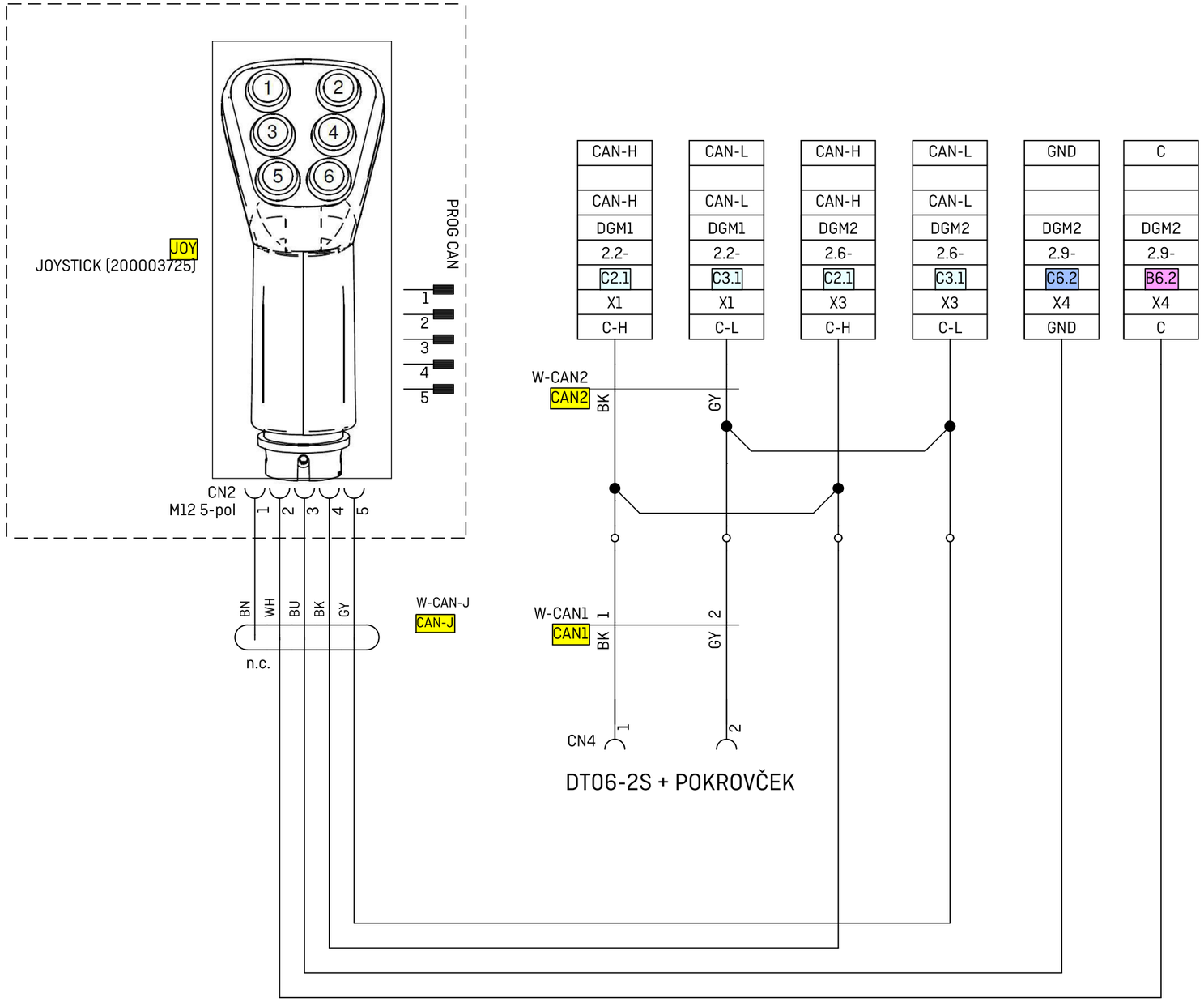

KRPAN®	Project: CS4218PRO.055.001.01 (del.hod) -final (servis) DELJENI HOD						Date: 9. 03. 2022	Wiring diagram	
		Other: CAN					Function: Editor: Andrej B.		
							Location: Auditor: Andrej B.	Page: 3 / 10	
	Workspace description:	Page description:	Rev.:	Change	Auth.	Rev. date	File :CS4218PRO.055.001.01 (del.hod) -final (servis)		SI

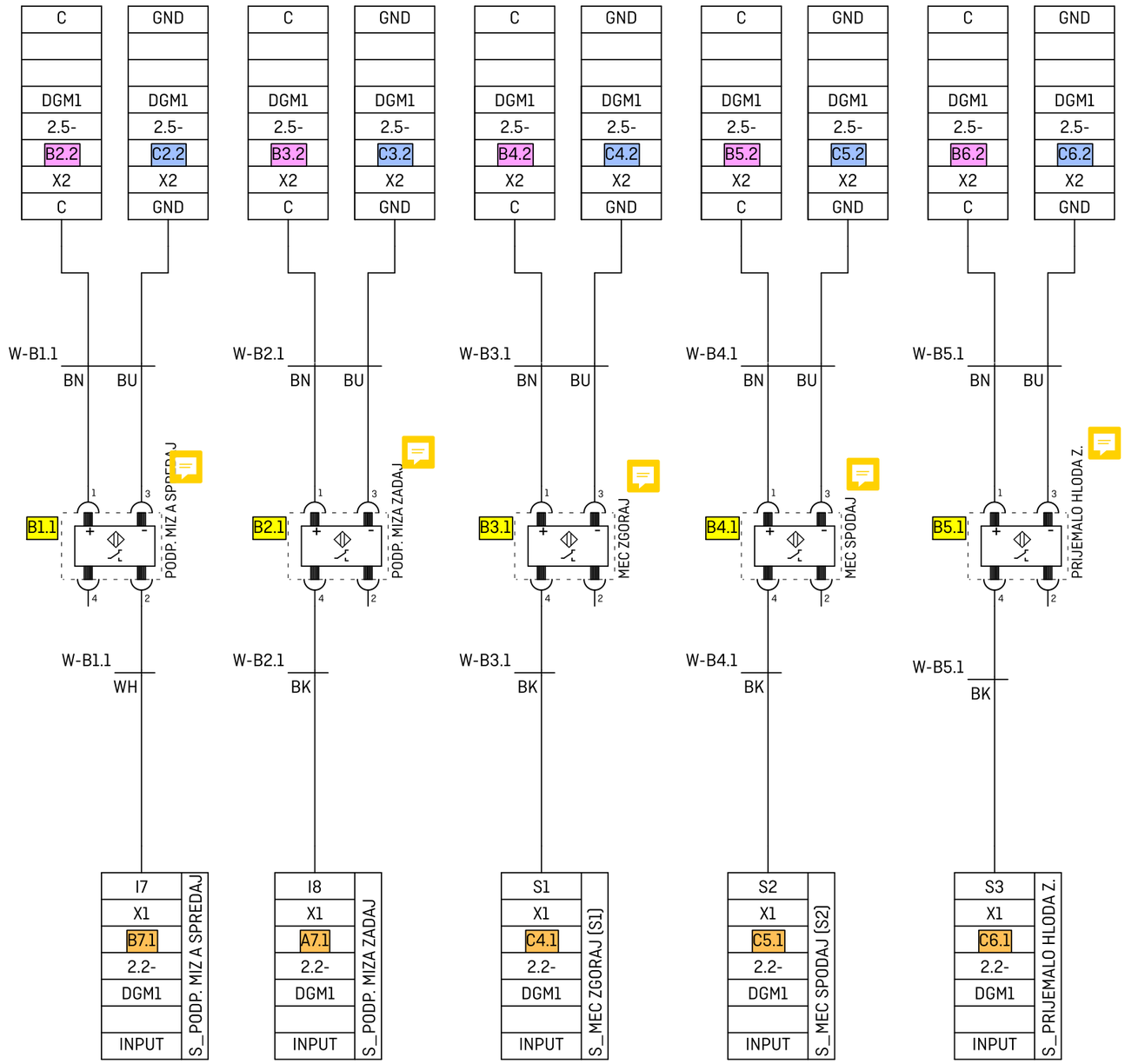

KRPAN®

Project: CS4218PRO.055.001.01 (del.hod) -final (servis)
DELJENI HOD

Other: INPUT DGM1

Workspace description:

Page description:

Rev.:	Change	Auth.	Rev. date

Date: 9. 03. 2022
Wiring diagram
Function:
Editor: Andrej B.
Location:
Auditor: Andrej B.
Page: 4 / 10
File :CS4218PRO.055.001.01 (del.hod) -final (servis)
SI

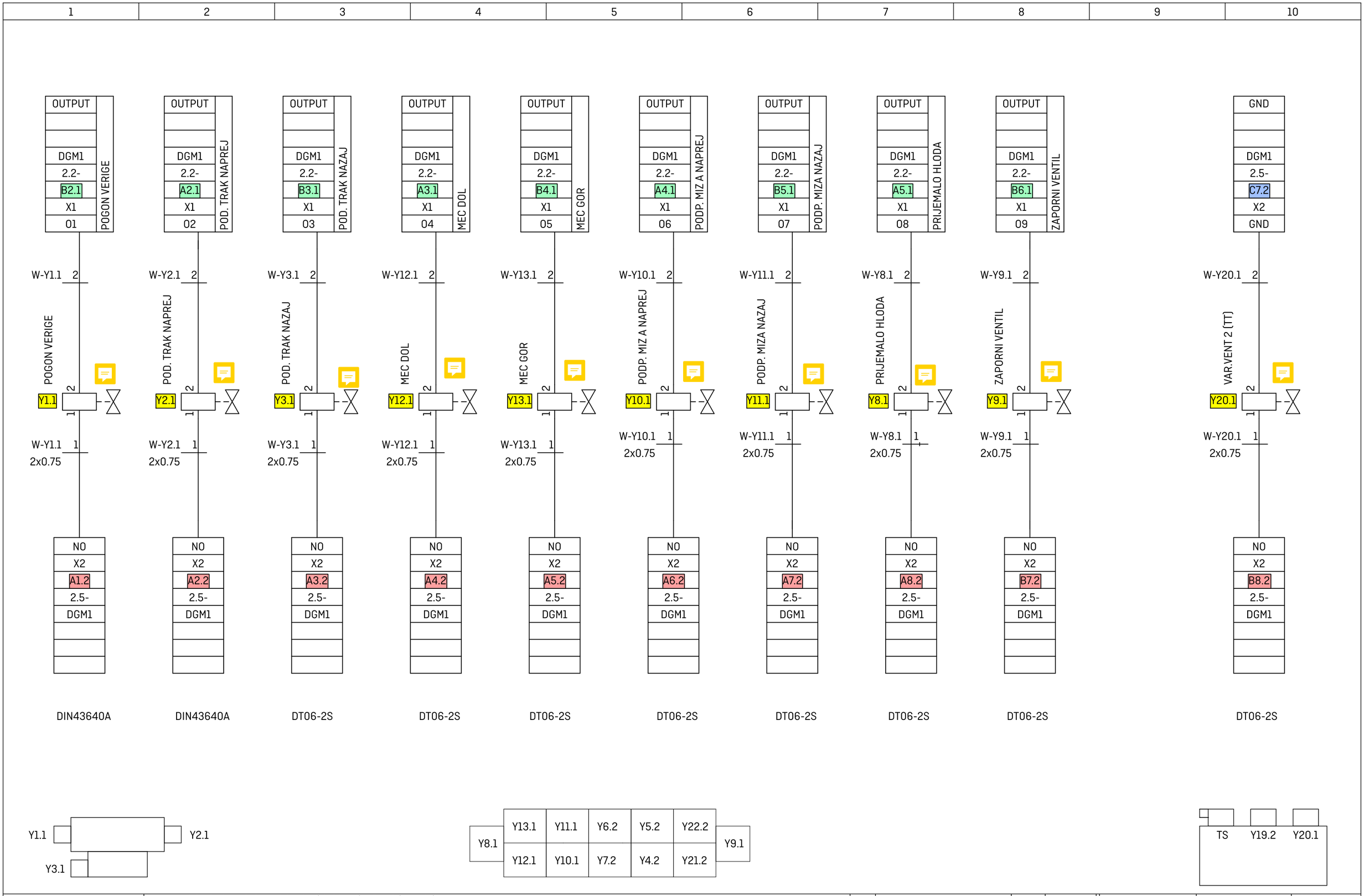

KRPAN®

Project: CS4218PR0.055.001.01 (del.hod) -final (servis)
DELJENI HOD

Other: OUTPUT DGM1

Workspace description:

Page description:

Rev.:	Change	Auth.	Rev. date

Function:

Location:

File :CS4218PR0.055.001.01 (del.hod) -final (servis)

Date: 9. 03. 2022

Editor: Andrej B.

Auditor: Andrej B.

Wiring diagram

Page: 5 / 10

SI

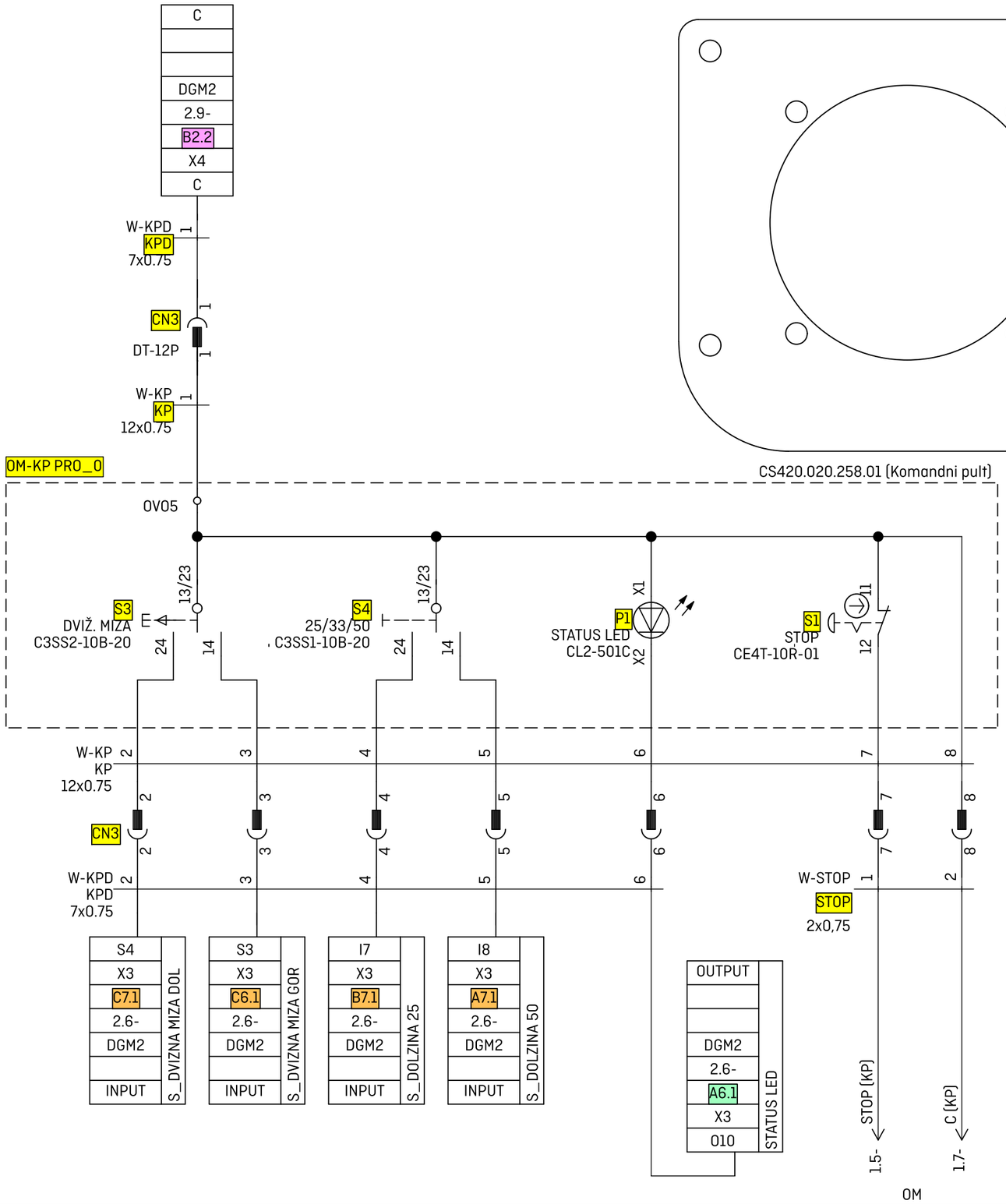

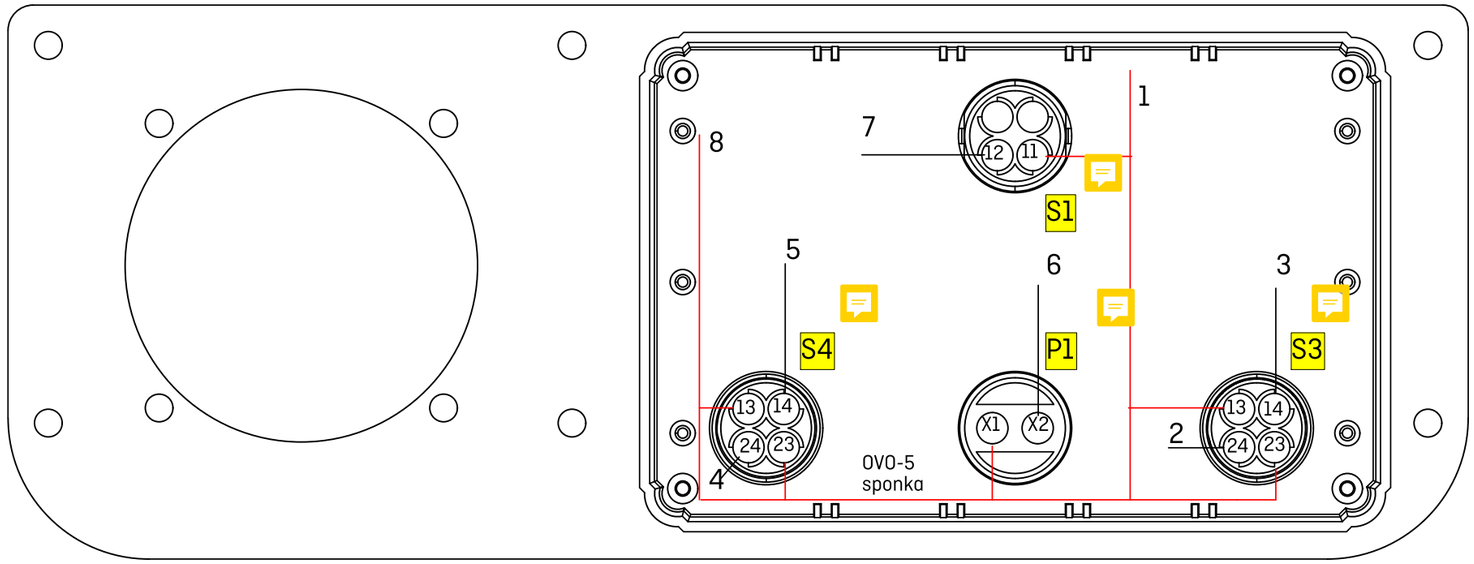

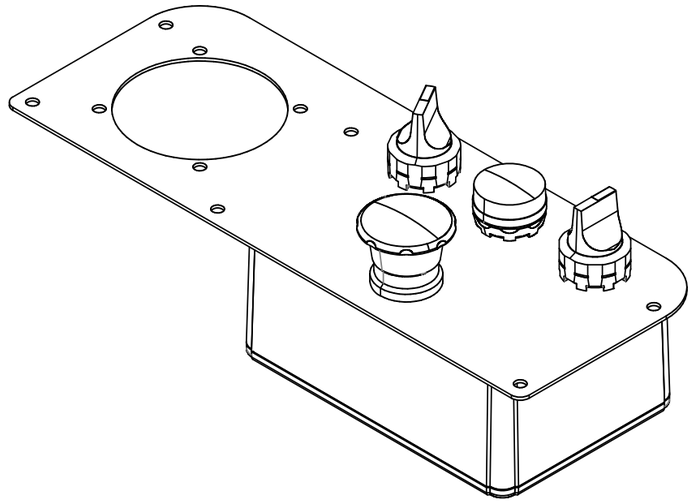

KRPAN®	Project: CS4218PRO.055.001.01 (del.hod) -final (servis) DELJENI HOD					Date: 9. 03. 2022	Wiring diagram
					Function:	Editor: Andrej B.	
		Other: KOMANDNI PULT DGM2			Location:	Auditor: Andrej B.	Page: 6 / 10
	Workspace description:	Page description:	Rev.:	Change	Auth.	Rev. date	File :CS4218PRO.055.001.01 (del.hod) -final (servis) SI

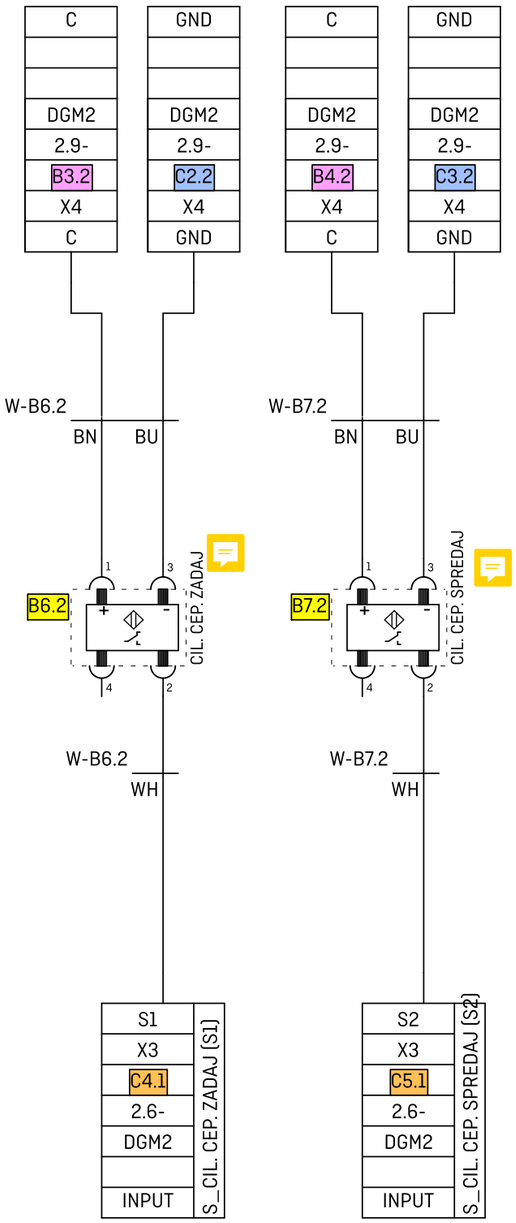

KRPAN®	Project: CS4218PR0.055.001.01 (del.hod) -final (servis) DELJENI HOD					Date: 9. 03. 2022	Wiring diagram
		Other: INPUT DGM2				Function: Editor: Andrej B.	
						Location: Auditor: Andrej B.	Page: 7 / 10
	Workspace description:	Page description:	Rev.:	Change	Auth.	Rev. date	File :CS4218PR0.055.001.01 (del.hod) -final (servis) SI

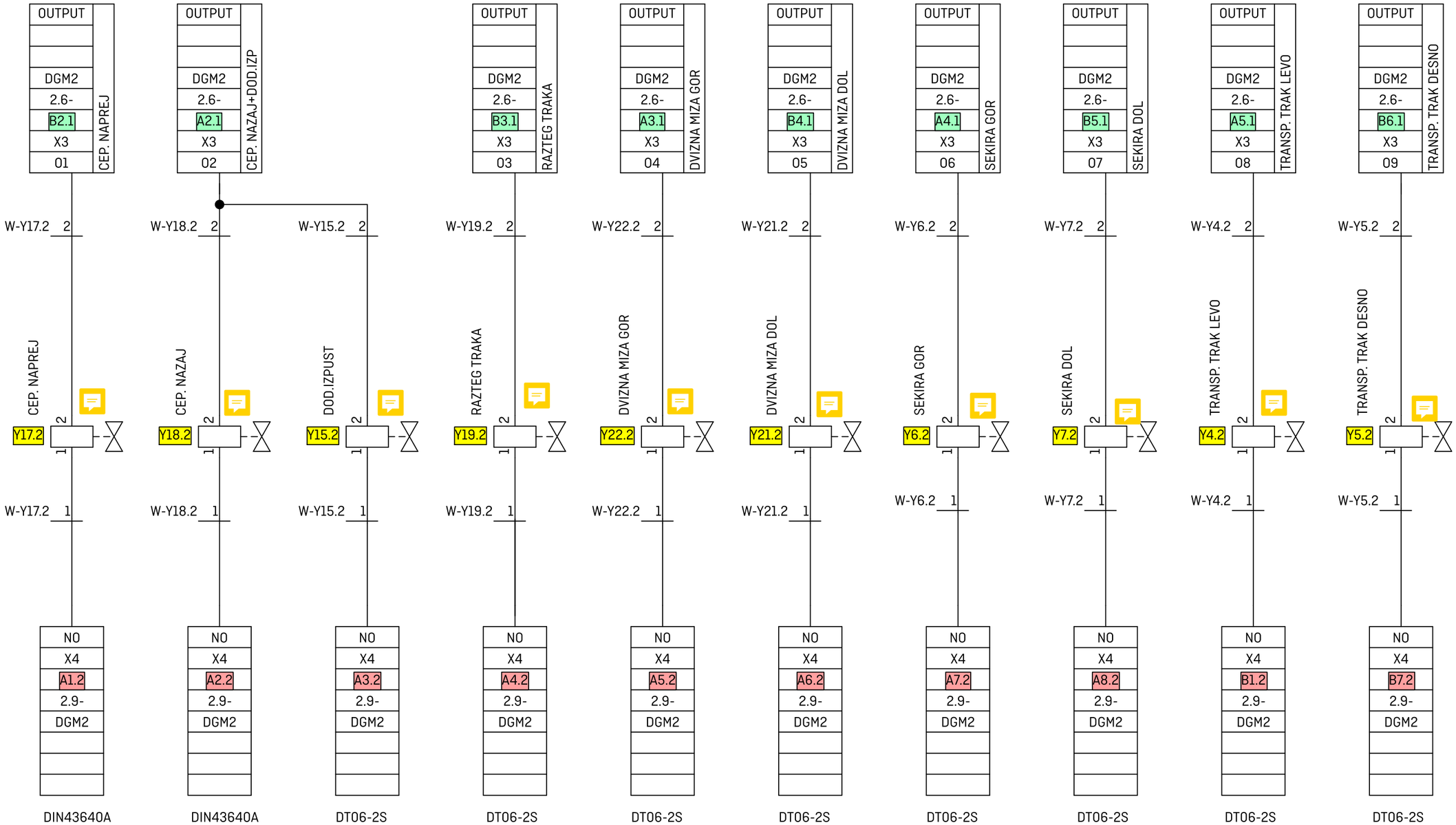

Y17.2
Y18.2

KRPAN®	Project: CS4218PR0.055.001.01 (del.hod) -final (servis) DELJENI HOD				Date: 9. 03. 2022	Wiring diagram	
					Function:	Editor: Andrej B.	
		Other: OUTPUT DGM2			Location:	Auditor: Andrej B.	Page: 8 / 10
	Workspace description:	Page description:	Rev.:	Change	Auth.	Rev. date	File :CS4218PR0.055.001.01 (del.hod) -final (servis) SI