Fault-Tolerant Soft Sensor Modeling Based on a Two-Dimensional Group Distributionally Robust Optimization Framework

Xiangrui Zhang, Chunyue Song, Jun Zhao, and Biao Huang, *Fellow, IEEE*

***Abstract*—In industrial automation and intelligence, fault tolerance mechanisms have always been an attractive topic. To develop soft sensors with fault tolerance for different types of faults and unforeseen new faults, this article proposes a two-dimensional group distributionally robust optimization (2D-GDRO) framework for fault-tolerant soft sensor modeling. We propose to describe the potential distributions of new fault conditions with an uncertainty set and optimize the soft sensor model by minimizing the worst-case risk over the uncertainty set. Considering the restricted representation range of the uncertainty set constructed directly from a mixture distribution of a limited number of existing fault conditions in the training set, a two-dimensional uncertainty set is designed at the group dimension and the sample dimension. To efficiently train a fault-tolerant soft sensor within the 2D-GDRO framework, we introduce a triple-interleaved optimization algorithm. This algorithm integrates mini-batch stochastic gradient descent, exponentiated gradient ascent, and group-wise SoftMax techniques. Finally, the fault tolerance of the 2D-GDRO framework based soft sensor is verified using the Tennessee-Eastman process and the real three-phase flow facility. The experimental results show that 2D-GDRO outperforms other training frameworks in average soft sensing accuracy under new fault conditions.**

***Note to Practitioners*—This article addresses the need for fault-tolerant soft sensors in industrial automation, where systems must continue to function reliably despite various types of faults and unforeseen faults. The solution proposed is a 2D-GDRO framework, which aims to make soft sensors more resilient to such faults by preparing them for worst-case scenarios during the training phase. This framework enhances the fault tolerance of soft sensors by designing an uncertainty set at two dimensions: the group dimension and the sample dimension, which allows soft sensors to better generalize beyond known fault conditions. The 2D-GDRO framework uses an efficient triple-interleaved optimization algorithm. While the 2D-GDRO framework significantly improves fault tolerance, its performance depends on the diversity of fault conditions represented in the training data. In cases where fault scenarios are highly unpredictable, additional refinement may be required. The fault-tolerant soft sensor based on 2D-GDRO can be applied across various industries, such as chemical manufacturing, oil and gas, and energy production, ensuring that the predictive monitoring remain reliable even in the presence of unknown new faults.**

***Index Terms*—Fault tolerance, soft sensor, distributionally robust optimization, 2D uncertainty set.**

Received 6 October 2024; revised 3 January 2025 and 30 March 2025; accepted 12 April 2025. Date of publication 17 April 2025; date of current version 2 May 2025. This article was recommended for publication by Associate Editor Y. Tong and Editor X. Liu upon evaluation of the reviewers' comments. This work was supported in part by the National Natural Science Foundation of China under Grant 62473333 and in part by Zhejiang Provincial Natural Science Foundation of China under Grant LZ23F030007. *(Corresponding authors: Chunyue Song; Biao Huang.)*

Xiangrui Zhang, Chunyue Song, and Jun Zhao are with the State Key Laboratory of Industrial Control Technology, Institute of Industry Intelligence and Systems Engineering, College of Control Science and Engineering, Zhejiang University, Hangzhou 310027, China (e-mail: zhangxiangrui@zju.edu.cn; csong@zju.edu.cn; jzhao@zju.edu.cn).

Biao Huang is with the Department of Chemical and Materials Engineering, University of Alberta, Edmonton, AB T6G 1H9, Canada (e-mail: biao.huang@ualberta.ca).

Digital Object Identifier 10.1109/TASE.2025.3561754

I. Introduction

IN THE era of Industry 4.0, the integration of artificial intelligence and industrial processes has given rise to a paradigm shift in the field of soft sensors [1], [2], [3]. Leveraging the power of deep neural networks and advanced machine learning algorithms, data-driven soft sensors have become the vanguard of predictive analytics in industrial settings [4], [5], [6]. These soft sensors transcend the limitations of traditional sensing techniques by autonomously learning intricate patterns from vast datasets, enabling them to provide accurate and real-time predictions into critical parameters and quality indexes. Commonly employed data-driven soft sensor modeling methods encompass Gaussian process regression (GPR) [7], hidden Markov regression (HMR) [8], slow feature analysis (SFA) [9], stacked autoencoder (SAE) [10], variational autoencoder (VAE) [11], convolutional neural network (CNN) [12], long short-term memory (LSTM) [13], graph neural network (GNN) [14], Transformer [15], mixture of experts (MoE) [16], and etc. With the development of machine learning and deep learning, significant research progresses have been made in soft sensor modeling [17]. Emerging technologies bring new solutions to address challenges in data quality, variable and feature selection, model selection and model construction, and soft sensor maintenance [18], [19]. In addition, the reliability, robustness, adaptability, and interpretability of soft sensors are highly valued [20], [21], [22], [23].

In industrial processes, the occurrence of faults is a common challenge [24], [25]. Given the complex and dynamic nature of industrial processes, faults can arise due to various factors such as equipment malfunction, environmental changes, or operational errors. Faults can swiftly spread within industrial systems, posing a significant challenge to the safety of industrial production [26], [27], [28]. The industry operation is

1558-3783 © 2025 IEEE. All rights reserved, including rights for text and data mining, and training of artificial intelligence and similar technologies. Personal use is permitted, but republication/redistribution requires IEEE permission.
See https://www.ieee.org/publications/rights/index.html for more information.

Authorized licensed use limited to: UNIVERSIDADE FEDERAL DE CAMPINA GRANDE. Downloaded on April 13,2026 at 20:17:22 UTC from IEEE Xplore. Restrictions apply.

TABLE I
COMPARISON AMONG DIFFERENT FAULT-TOLERANT SOFT SENSORS

Method	Model Form	Fault Type			New Faults
		Sensor Fault	Actuator Fault	Process Fault	
MSaS family [30]	Linear state space	✔	✔	✗	✗
DSLAN [32]	Neural network	✔	✗	✗	✗
TL-LSTM [33]	Neural network	✔	✗	✗	✗
GRU-AL [34]	Neural network	✔	✗	✗	✔
2D-GDRO (proposed)	Neural network	✔	✔	✔	✔

safety-critical, where even minor accidents have the potential to trigger devastating disasters. As such, the development of fault tolerance mechanisms emerges as a critical feature in industrial automation and intelligence. However, while there is a wealth of studies on fault-tolerant process control [29], there has been limited research dedicated to fault-tolerant soft sensors. In industrial soft sensing, a fault-tolerant soft sensor is characterized by its ability to withstand and adapt to unexpected faults [30]. As sensing is the foundation for achieving industrial automation and intelligence, designing fault-tolerant soft sensors holds significant benefits for sensing, control, optimization, and diagnosis of industrial processes. On one hand, the primary purpose of soft sensors is to facilitate advanced process control oriented product quality. Thus, the fault tolerance of soft sensors is integral to sustaining the fault tolerance of advanced process control systems. On the other hand, managers and engineers are more concerned about quality-related faults that will lead to changes in the final product quality and yield [31]. The ability of fault-tolerant soft sensors to provide reliable quality predictions even in the presence of unexpected faults can help achieve the quality-related fault diagnosis. In other words, when a fault-tolerant soft sensor identifies a decline in product quality, it serves as an indication that there could be a quality-related fault in the industrial process.

Recently, a few work has explored fault-tolerant soft sensor modeling. Chen and Huang [30] developed three data-driven approaches (MSaS family) for fault-tolerant soft sensor design based on the linear state space model. Zhang et al. [32] proposed a deep subdomain learning adaptation network (DSLAN) based on transfer learning for soft sensor modeling under sensor faults. Liu et al. [33] studied a two-layer LSTM (TL-LSTM) for fault-tolerant soft sensor modeling of uneven batch processes against sensor faults. Ding et al. [34] designed a zero-shot soft sensor model (GRU-AL) that was robust to sensor faults using adversarial learning. However, the existing fault-tolerant soft sensors mentioned above have two significant limitations. First, industrial processes are inherently complex and encompass three different types of faults: sensor faults, actuator faults, and process faults [35]. The MSaS family is a simple linear model valid for sensor and actuator faults, while DSLAN, TL-LSTM, and GRU-AL are only valid for sensor faults, neglecting fault tolerance for other types of faults. Achieving comprehensive fault tolerance necessitates a focus on three types of faults. Although stopping production in rare cases of major actuator and process faults is a routine

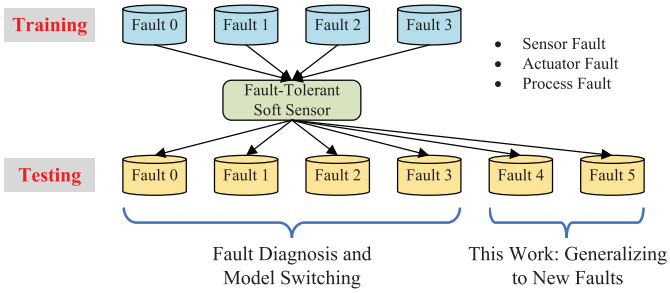

Fig. 1. The schematic diagram of fault-tolerant soft sensor modeling.

measure to ensure safety, there are still a large number of these types of common faults that are only repaired during periodic maintenance, such as valve sticking and reaction drift. The development of fault-tolerant sensors for three types of faults aims to improve the reliability of industrial systems, reduce downtime costs, and provide more guarantees for safety and stable operations. Second, given the challenge of obtaining an ideal training set covering all potential faults [36], evaluating the generalization ability of fault-tolerant models for new faults that is not present in the training set becomes paramount. Unfortunately, only GRU-AL exhibits a certain degree of generalization to new faults, while the MSaS family, DSLAN, and TL-LSTM do not possess this ability. As shown in Fig. 1, existing faults in the training set can be effectively handled through fault diagnosis coupled with model switching fault-tolerant strategies. This article places particular emphasis on the generalization to new faults, highlighting the challenges and considerations associated with fault tolerance for different types of faults and unforeseen new faults [37].

To overcome the limitations of existing work, this article proposes a two-dimensional group distributionally robust optimization (2D-GDRO) framework for fault-tolerant soft sensor modeling with generalization to different types of faults and unforeseen new faults. Table I demonstrates the innovation of the proposed 2D-GDRO framework by comparing it with existing fault-tolerant soft sensors. Due to the fact that a fault can exhibit multiple characteristics, the potential new faults are highly likely to exhibit some common characteristics with existing faults in the training set. Consequently, we propose to describe the distribution of potential new fault conditions using a mixture distribution of existing faults. The set of these distributions is defined as an uncertainty set. By minimizing the worst-case risk over the uncertainty set, the fault tolerance

Authorized licensed use limited to: UNIVERSIDADE FEDERAL DE CAMPINA GRANDE. Downloaded on April 13,2026 at 20:17:22 UTC from IEEE Xplore. Restrictions apply.

of soft sensors for new faults will be enhanced. However, the number of existing faults in the training set is typically limited in industrial practice. Considering the restricted representation range of the uncertainty set constructed directly from the mixture of existing fault conditions to describe new fault conditions, a two-dimensional (2D) uncertainty set is designed in 2D-GDRO. At the group dimension, the potential distribution of new fault conditions in the 2D uncertainty set is characterized by a mixture of group distributions with changeable mixing coefficients. At the sample dimension, each group distribution is represented by an ambiguous distribution derived from the original distribution of the normal condition and existing fault conditions with adaptable sample weights. Compared with traditional uncertainty sets, the designed 2D uncertainty set expands the representation range to describe new fault conditions by adjusting the group distribution through sample reweighting. The worst-case scenario within the uncertainty set characterizes the lower bound of the applicability of a soft sensor to new faults. Minimizing the worst-case risk can enhance the tolerance to potential new fault distributions in the 2D uncertainty set.

Specifically, the contributions of this article are as follows:

1) A 2D-GDRO framework is proposed for fault-tolerant soft sensor modeling, which achieves fault tolerance for three different types of faults and unforeseen new faults.
2) By introducing changeable mixing coefficients and adaptable sample weights, we design a novel 2D uncertainty set for 2D-GDRO, which can overcome the limitation of the number of existing fault conditions in the training set.
3) To efficiently train a fault-tolerant soft sensor with the 2D-GDRO framework, we introduce a triple-interleaved optimization algorithm, which integrates mini-batch stochastic gradient descent (SGD), exponentiated gradient ascent, and group-wise SoftMax techniques.

II. Group Distributionally Robust Optimization

Consider predicting output variables $\mathbf{y}$ using input variables $\mathbf{x}$ by a deep learning model $f_{\boldsymbol{\theta}}(\mathbf{x})$ with $\boldsymbol{\theta}$ as its trainable parameters. The standard training procedure of deep learning is empirical risk minimization (ERM) [38]:

$$\min_{\boldsymbol{\theta}\in\Theta} \mathbb{E}_{(\mathbf{x},\mathbf{y})\sim P}\left[l\left(f_{\boldsymbol{\theta}}(\mathbf{x}),\mathbf{y}\right)\right] \tag{1}$$

where l denotes the loss function and P denotes the distribution of the training data.

When trained to minimize the average loss on the training set using ERM, the deep learning model can achieve high accuracy on an independent and identically distributed (iid) test set. However, these models may encounter significant challenges when dealing with rare, atypical, and non-iid test samples. For instance, a model trained with samples under one fault condition may exhibit substantial errors when applied to another fault condition. In order to mitigate the risk of learning models that incur high losses on specific groups of data, Sagawa et al. proposed group distributionally robust optimization (GDRO) [39], which aims to minimize the worst-case risk over an uncertainty set $\mathcal{Q}_{\text{GDRO}}$ as

$$\min_{\boldsymbol{\theta}\in\Theta}\left\{\mathcal{R}_{\text{GDRO}}(\boldsymbol{\theta}) = \sup_{Q\in\mathcal{Q}_{\text{GDRO}}} \mathbb{E}_{(\mathbf{x},\mathbf{y})\sim Q}\left[l\left(f_{\boldsymbol{\theta}}(\mathbf{x}),\mathbf{y}\right)\right]\right\} \tag{2}$$

The uncertainty set encodes potential distributions Q of test data that we aim for the model to excel in, which is defined by a mixture distribution of a set of pre-defined groups as follows

$$\mathcal{Q}_{\text{GDRO}}(\boldsymbol{\alpha}) := \left\{\sum_{k=1}^{K}\alpha_k P_k : \alpha_k \in \Delta_K\right\} \tag{3}$$

where $\sum_{k=1}^{K}\alpha_k = 1$ belong to a $(K-1)$-dimensional probability simplex Δ_K, and P_k is the distribution of the kth group of training data. Intuitively, GDRO constructs the worst-case scenario by optimizing the mixing coefficients $\boldsymbol{\alpha}$, and then minimizes the worst-case risk by optimizing the model parameters $\boldsymbol{\theta}$.

While GDRO has not been applied to fault-tolerant soft sensor modeling thus far, a possible approach involves considering the uncertainty set as the potential distribution of new fault conditions. The data distributions of existing faults and new faults may differ, but potential new faults are likely to exhibit some common characteristics with existing faults. Therefore, each fault condition could be treated as a group, and the uncertainty set could be constructed using a mixture distribution of existing fault conditions in the training set. By minimizing the worst-case risk over this uncertainty set, we aim to enhance the fault tolerance of soft sensors in the presence of new faults. However, it should be noted that the number of existing fault conditions in the training set K is often limited in industrial practice, which restricts the representation range of the uncertainty set for new fault conditions. In response to this challenge, this article proposes a 2D-GDRO by developing a new 2D uncertainty set.

III. Two-Dimensional Group Distributionally Robust Optimization

Given a training set $\mathcal{D} = \{\mathbf{x}_i, \mathbf{y}_i, g_i\}_{i=1}^{n}$ comprising one normal condition and K fault conditions, each condition is regarded as a group. $g_i = k$ is the group index, with $k = 0$ if $(\mathbf{x}_i, \mathbf{y}_i)$ is from the normal condition and $k \in [1, K]$ if $(\mathbf{x}_i, \mathbf{y}_i)$ is from the kth existing fault condition in the training set. This article proposes a 2D-GDRO framework primarily aimed at establishing a fault-tolerant soft sensor capable of retaining effectiveness in unforeseen new fault conditions beyond the initial K existing faults. The root causes of various types of faults are different, and they cause changes in data distribution of some variable as the faults propagate. The proposed 2D-GDRO framework fundamentally utilizes the assumption that there are some common characteristics among different fault conditions, which is independent of the fault type. Therefore, 2D-GDRO is effective for sensor faults, actuator faults, and process faults universally.

Authorized licensed use limited to: UNIVERSIDADE FEDERAL DE CAMPINA GRANDE. Downloaded on April 13,2026 at 20:17:22 UTC from IEEE Xplore. Restrictions apply.

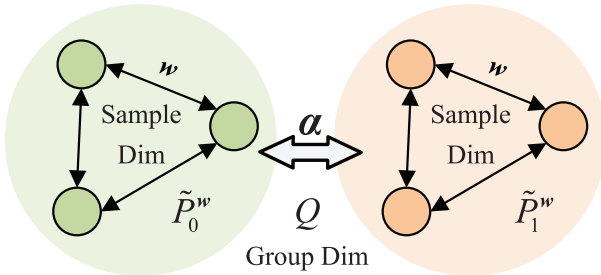

Fig. 2. 2D uncertainty set.

A. 2D-GDRO Framework

Similar to GDRO, the optimization objective of the proposed 2D-GDRO is to minimize the worst-case risk over an uncertainty set as

$$\min_{\boldsymbol{\theta}\in\Theta}\left\{\mathcal{R}_{\text{2D-GDRO}}(\boldsymbol{\theta}) = \sup_{Q\in\mathcal{Q}_{\text{2D-GDRO}}} \mathbb{E}_{(\mathbf{x},\mathbf{y})\sim Q}\left[l\left(f_{\boldsymbol{\theta}}(\mathbf{x}),\mathbf{y}\right)\right]\right\} \quad (4)$$

The uncertainty set encodes potential distributions Q of new fault conditions that we aim to enhance the tolerance of the soft sensor model. Furthermore, the worst-case scenario within the uncertainty set characterizes the lower bound of the applicability of the soft sensor to new faults. By minimizing the worst-case risk over the uncertainty set, the lower bound will be raised so that the tolerance to potential new fault conditions can be enhanced. To expand the representation range for new fault conditions with the limited number of existing faults in the training set, we introduce a 2D uncertainty set $\mathcal{Q}_{\text{2D-GDRO}}$, which is defined by

$$\mathcal{Q}_{\text{2D-GDRO}}(\boldsymbol{\alpha},\mathbf{w}) := \left\{\alpha_0\tilde{P}_0^{\mathbf{w}} + \sum_{k=1}^{K}\alpha_k\tilde{P}_k^{\mathbf{w}} : \alpha_k \in \Delta_{K+1}\right\} \quad (5)$$

where $\boldsymbol{\alpha} = [\alpha_0,\cdots,\alpha_K]^T$ denotes mixing coefficients, while $\mathbf{w} = [w_1,\cdots,w_N]^T$ denotes sample weights. The mixing coefficients $\boldsymbol{\alpha}$ belong to a K-dimensional probability simplex Δ_{K+1}, such that $\sum_{k=0}^{K}\alpha_k = 1$. By changing $\boldsymbol{\alpha}$ and $\mathbf{w}$, we can obtain a set of potential distributions of new fault conditions.

The worst-case scenario within the 2D uncertainty set could be constructed by optimizing the mixing coefficients $\boldsymbol{\alpha}$ and the sample weights $\mathbf{w}$. Then, the model parameters $\boldsymbol{\theta}$ could be optimized by minimizing the worst-case risk. Fig. 2 provides an illustration of the designed 2D uncertainty set. At the group dimension, the potential distribution of a new fault condition Q in the 2D uncertainty set $\mathcal{Q}_{\text{2D-GDRO}}$ is characterized by a mixture of group distributions $\tilde{P}_k^{\mathbf{w}}$ with changeable mixing coefficients $\boldsymbol{\alpha}$. At the sample dimension, each group distribution $\tilde{P}_k^{\mathbf{w}}$ is represented by an ambiguous distribution derived from the original distribution of the normal condition P_0 or the kth existing fault conditions P_k with adaptable sample weights $\mathbf{w}$. For $\tilde{P}_k^{\mathbf{w}}$ to be a valid distribution, we require $\mathbb{E}_{(\mathbf{x},\mathbf{y})\sim P_k}\left[w(\mathbf{x},\mathbf{y})\right] = 1$, where $w(\mathbf{x},\mathbf{y})$ denotes a sample weighting function.

As the optimum of a linear program is achieved at a vertex, the worst-case risk $\mathcal{R}_{\text{2D-GDRO}}(\boldsymbol{\theta})$ is equivalent to the maximum over the expected loss of each group as

$$\begin{aligned}\mathcal{R}_{\text{2D-GDRO}}(\boldsymbol{\theta}) &= \max_k \mathbb{E}_{(\mathbf{x},\mathbf{y})\sim\tilde{P}_k}\left[l\left(f_{\boldsymbol{\theta}}(\mathbf{x}),\mathbf{y}\right)\right] \\ &= \max_{\boldsymbol{\alpha},\mathbf{w}} \sum_{k=0}^{K}\alpha_k\mathbb{E}_{(\mathbf{x},\mathbf{y})\sim P_k} w(\mathbf{x},\mathbf{y})\left[l\left(f_{\boldsymbol{\theta}}(\mathbf{x}),\mathbf{y}\right)\right] \quad (6)\end{aligned}$$

The worst-case scenario within the 2D uncertainty set is constructed by maximizing risk on the sample weights $\mathbf{w}$ and the mixing coefficients $\boldsymbol{\alpha}$. Given data samples in the training set, the empirical worst-case risk is defined as

$$\begin{aligned}\hat{\mathcal{R}}_{\text{2D-GDRO}}(\boldsymbol{\theta}) = \max_{\boldsymbol{\alpha}} \sum_{k=0}^{K}\Bigg\{\alpha_k \max_{\mathbf{w}} \frac{1}{N_k}\sum_{i=1}^{N} w(\mathbf{x}_i,\mathbf{y}_i) \\ \times\left[l\left(f_{\boldsymbol{\theta}}(\mathbf{x}_i),\mathbf{y}_i\right)\right] + \frac{C}{\sqrt{N_k}}\Bigg\} \quad (7)\end{aligned}$$

where N is the total number of samples, N_k is the number of samples in the kth condition, C is a hyperparameter modulating model capacity, and the sample weighting function is defined by

$$w(\mathbf{x}_i,\mathbf{y}_i) = \begin{cases} w_i, & \text{if } g_i = k \\ 0, & \text{if } g_i \neq k \end{cases} \quad (8)$$

where w_i is the adaptable sample weight of the ith sample.

Finally, we learn the model parameters of a fault-tolerant soft sensor within the 2D-GDRO framework by minimizing the empirical worst-case risk

$$\hat{\boldsymbol{\theta}}_{\text{2D-GDRO}} = \arg\min_{\boldsymbol{\theta}\in\Theta} \hat{\mathcal{R}}(\boldsymbol{\theta}) \quad (9)$$

B. Optimization Algorithm

The proposed 2D-GDRO framework is a triple optimization, including the maximization on the sample weights $\mathbf{w}$, the maximization on the mixing coefficients $\boldsymbol{\alpha}$, and the minimization on the model parameters $\boldsymbol{\theta}$. To efficiently train a fault-tolerant soft sensor model with the 2D-GDRO framework, we introduce a triple-interleaved optimization algorithm, progressing from the inside out. To maximize on the sample weights $\mathbf{w}$, we propose a group-wise SoftMax for maximization. This greedy solving strategy can improve optimization efficiency and save storage space. In each iteration, samples with significant errors should be given higher sample weights in each group. Therefore, the group-wise SoftMax of the sample loss $l\left(f_{\boldsymbol{\theta}}(\mathbf{x}_i),\mathbf{y}_i\right)$ is used to update the sample weights as

$$w_i^k = \frac{\exp\left(l\left(f_{\boldsymbol{\theta}}(\mathbf{x}_i),\mathbf{y}_i\right)\right)}{\sum_{g_i=k}\exp\left(l\left(f_{\boldsymbol{\theta}}(\mathbf{x}_i),\mathbf{y}_i\right)\right)} \quad (10)$$

The maximization on the mixing coefficients $\boldsymbol{\alpha}$ is a non-negative constrained linear optimization problem. Instead of directly picking the group with the worst average loss, we employ exponentiated gradient ascent to update α_k using gradients at each iteration, which is crucial

Authorized licensed use limited to: UNIVERSIDADE FEDERAL DE CAMPINA GRANDE. Downloaded on April 13,2026 at 20:17:22 UTC from IEEE Xplore. Restrictions apply.

for ensuring stability and attaining convergence guarantees. In detail, the update equation can be expressed as follows

$$\alpha_k' = \alpha_k \exp\left(\eta \frac{1}{N_k} \sum_{i=1}^{N} w\left(\mathbf{x}_i, \mathbf{y}_i\right)\left[l\left(f_{\boldsymbol{\theta}}\left(\mathbf{x}_i\right), \mathbf{y}_i\right)\right] + \frac{C}{\sqrt{N_k}}\right) \quad (11)$$

where η is the step size.

Algorithm 1 The Triple-Interleaved Optimization Algorithm

Input: Dataset $\mathcal{D} = \{\mathbf{x}_t, \mathbf{y}_t\}_{t=1}^{T}$, epoch N_{train}, learning rate lr, batch number N_{batch}, step size η

Output: Model parameters $\boldsymbol{\theta}$, sample weights $\boldsymbol{w}$, mixing coefficients $\boldsymbol{\alpha}$

```
for epoch =1 to N_train do
    for batch =1 to N_batch do
        Forward propagate
        Update the sample weights with the group-wise SoftMax
        Update the mixing coefficients with the exponentiated gradient ascent
        Back propagate to update the model parameters with the mini-batch SGD
    end for
    if validation loss does not improve then
        Break
    end if
end for
```

Once the sample weights $\mathbf{w}$ and the mixing coefficients $\boldsymbol{\alpha}$ are determined in inner layers, the model parameters $\boldsymbol{\theta}$ can be updated using mini-batch SGD. Overall, the optimization process within the 2D-GDRO framework can be linked to a dynamic game. At each epoch, one player endeavors to maximize risk and construct the worst-case scenario by optimizing the sample weights $\mathbf{w}$ and the mixing coefficients $\boldsymbol{\alpha}$, while the other player aims to minimize risk by optimizing the model parameters $\boldsymbol{\theta}$. This dynamic game between the players drives the continuous refinement of the fault-tolerant soft sensor model, ultimately enhancing its robustness and adaptability to diverse fault conditions. Algorithm 1 gives the detailed optimization algorithm for the proposed 2D-GDRO framework. Together, we can interleave the mini-batch SGD on $\boldsymbol{\theta}$, the exponentiated gradient ascent on $\boldsymbol{\alpha}$, and the group-wise SoftMax on $\mathbf{w}$ to learn a 2D-GDRO-based fault-tolerant soft sensor.

C. Fault-Tolerant Soft Sensor Application

By harnessing the proposed 2D-GDRO framework and its optimization algorithm, it is feasible to establish a fault-tolerant soft sensor model capable of generalizing to new faults. The 2D-GDRO framework does not presuppose specific fault types, making it applicable to sensor faults, actuator faults, and process faults universally. It should be noted that 2D-GDRO is a fault tolerance training framework for deep learning models essentially. Therefore, 2D-GDRO is applicable to various soft sensor models, such as MLP, SAE, LSTM, and Transformer. For practical application, the detailed deployment steps are provided in the following:

Offline training:

Step 1 Determine the input variables $\mathbf{x}$ and output variables $\mathbf{y}$ for a fault-tolerant soft sensor modeling task.

Step 2 Collect data samples from one normal condition and K fault conditions to form the training set and validation set.

Step 3 Apply the Min-Max normalization to training and validation data using data from the normal condition.

Step 4 Determine model structure and set hyperparameters.

Step 5 Train the fault-tolerant soft sensor with Algorithm 1.

Online testing:

Step 1 A new fault condition has been detected.

Step 2 Apply the Min-Max normalization to the new fault data using data from the normal condition.

Step 3 Predict the output with the well-trained fault-tolerant soft sensor under the new fault condition.

The proposed 2D-GDRO framework is essentially a robust modeling method with fault tolerance for unforeseen new faults. However, due to time-varying characteristics, external disturbances, equipment degradation, and other factors, the performance of the soft sensor model may deteriorate. Field engineers can perform manual sampling and assaying at regular intervals to detect errors in time. In the event of significant prediction errors, the model needs to be calibrated using new labeled samples.

IV. Experiments and Discussions

To verify the effectiveness of the proposed 2D-GDRO framework, we utilize the Tennessee-Eastman process (TEP) and a real three-phase flow facility (TPFF) testbed to evaluate the performance of soft sensors under new faults and different types of faults. Considering one normal condition and $(K+1)$ distinct fault conditions, we take the normal condition and K fault conditions as the training set, and the remaining fault condition as the test set. Both faults in the training and test sets involved are not restricted to specific types of faults. The root-mean-squared error (RMSE) and the coefficient of determination (R^2) are commonly used metrics for evaluating soft sensing accuracy. In order to comprehensively evaluate the accuracy of soft sensors under new fault conditions, we introduce $(K+1)$-fold cross-validation, where K is the number of fault conditions in the training set. Specifically, each fault condition is alternately used as the test set, while the normal condition and other fault conditions serve as the training set. Finally, the average accuracy of the $(K+1)$-fold cross-validation are regarded as the evaluation criteria of fault tolerance performance.

The average accuracy of cross-validation results assesses the overall performance among all fault conditions used for test, which is calculated by

$$\text{RMSE} = \frac{1}{K+1} \sum_{i=1}^{K+1} \text{RMSE}_i \quad (12)$$

$$R^2 = \frac{1}{K+1} \sum_{i=1}^{K+1} R_i^2 \quad (13)$$

Authorized licensed use limited to: UNIVERSIDADE FEDERAL DE CAMPINA GRANDE. Downloaded on April 13,2026 at 20:17:22 UTC from IEEE Xplore. Restrictions apply.

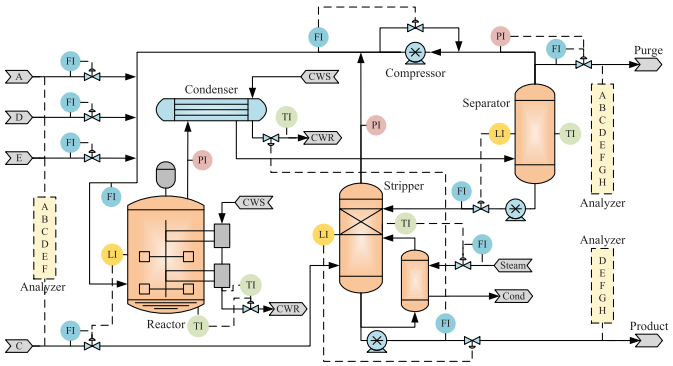

Fig. 3. Process flow diagram of the TEP.

For the average accuracy, a smaller RMSE and a larger R^2 signify better fault tolerance performance. We consider a more realistic fault-tolerant soft sensor modeling scenario, where generalization to different types of faults and unforeseen new faults is required. In this case, the proposed 2D-GDRO needs several faults to build a fault-tolerant soft sensor, but the current fault-tolerant soft sensors cannot utilize these existing faults in the training set. Moreover, the proposed 2D-GDRO is a training framework that can be applied to most deep learning models, rather than a model. For fair comparison, instead of the existing fault-tolerant soft sensors, we chose LSTM as a basic model and compare the following classic and state-of-the-art training frameworks:

- ERM: Empirical risk minimization.
- IRM: Invariant risk minimization.
- GDRO: Group distributionally robust optimization.
- 2D-GDRO: Two-dimensional group distributionally robust optimization (proposed).

These frameworks are also potential solutions for fault-tolerant soft sensor modeling. All experiments are carried out using Python 3.9 language and PyTorch 1.11 package on a laptop with Intel Core i5-11300H and NVIDIA GeForce MX450.

A. Tennessee-Eastman Process

TEP is a well-known public benchmark for evaluating the performance of soft sensors [40]. The process flow diagram of the TEP is shown in Fig. 3, which includes five operating units: reactor, condenser, compressor, separator, and stripper. The gaseous materials A, D, and E enter the reactor to generate liquid products. The products and residual reactants are cooled by the condenser and enter the vapor-liquid separator. The separated gas enters the circulation pipeline through the compressor, mixed with fresh feed, and sent to the reactor for circulation. The separated liquid enters the stripper for refining through pipeline 10, together with the gaseous material C. The stream obtained from the bottom of the stripper mainly includes the products G and H, which are sent to the downstream process. There are 22 continuous process variables, 12 manipulated variables, and 19 component analysis variables. We select both the continuous process variables and the manipulated variables as the input, and component C in purge gas as the output of soft sensors.

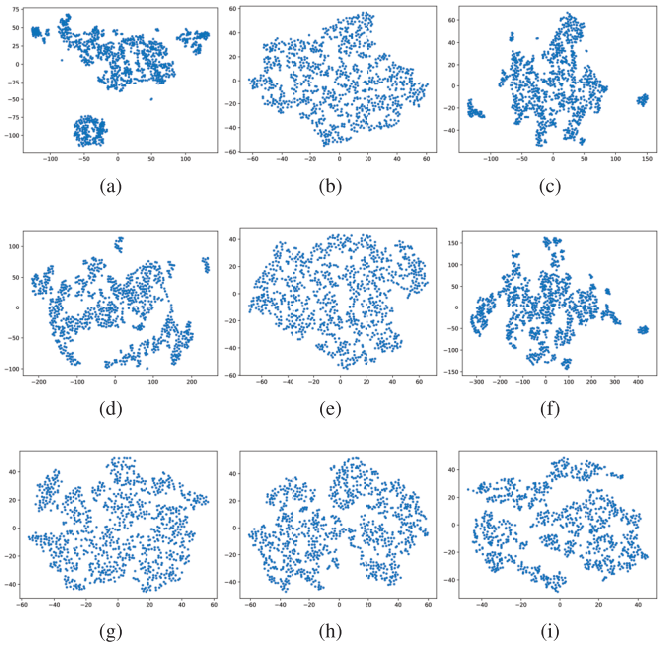

Fig. 4. T-SNE embedding of industrial data in different fault conditions. (a) IDV(1) (b) IDV(3) (c) IDV(5) (d) IDV(8) (e) IDV(9) (f) IDV(12) (g) IDV(14) (h) IDV(15) (i) IDV(21).

TABLE II
FAULT DESCRIPTION OF THE TEP

Fault	Description	Fault Type
IDV(0)	Normal operation	–
IDV(1)	Step in A/C feed ratio in stream 4	Process fault
IDV(3)	Step in D feed temperature	Process fault
IDV(5)	Step in condenser cooling water inlet temperature in stream 3	Process fault
IDV(8)	Random variations in A,B,C compositions in stream 4	Process fault
IDV(9)	Random variations in D feed temperature	Process fault
IDV(12)	Random variations in condenser cooling water inlet temperature	Process fault
IDV(14)	Reactor cooling water valve sticking	Actuator fault
IDV(15)	Condenser cooling water valve sticking	Actuator fault
IDV(21)	Stream 4 valve sticking	Actuator fault

The complete dataset of the TEP can be downloaded from the website,[1] which includes one normal condition denoted as IDV(0) and 21 different fault conditions denoted as IDV(1-21). As shown in Table II, the normal condition and 9 fault conditions are selected for experiments. These fault conditions comprise 6 process faults (3 step variations and 3 random variations) and 3 actuator faults. To evaluate the fault tolerance performance of soft sensors under new fault conditions, we employ 9-fold cross-validation and report the average accuracy. As shown in Fig. 4, industrial data in different fault conditions often exhibit different distributions. We use a new fault for testing, which means that the test data and training data have different distributions. Meanwhile, different fault conditions are likely to exhibit some common characteristics. Each normal or fault condition has 960 samples. The last

[1]TEP: https://ieee-dataport.org/documents/te-process

Authorized licensed use limited to: UNIVERSIDADE FEDERAL DE CAMPINA GRANDE. Downloaded on April 13,2026 at 20:17:22 UTC from IEEE Xplore. Restrictions apply.

TABLE III
SOFT SENSING PERFORMANCE OF DIFFERENT FRAMEWORKS ON THE TEP

	ERM		IRM		GDRO		2D-GDRO	
IDV	RMSE	R^2	RMSE	R^2	RMSE	R^2	RMSE	R^2
(1)	0.719	0.297	0.815	-0.273	0.716	0.375	0.773	0.457
(3)	0.280	0.304	0.328	0.440	0.283	0.321	0.284	0.453
(5)	0.311	0.727	0.449	0.776	0.311	0.763	0.326	0.793
(8)	1.217	-0.077	0.898	0.802	1.170	0.103	0.958	0.643
(9)	0.282	0.225	0.336	0.432	0.297	0.365	0.305	0.358
(12)	0.755	0.715	0.856	0.774	0.709	0.754	0.595	0.870
(14)	0.266	-0.200	0.529	-0.368	0.277	-0.059	0.303	-0.062
(15)	0.279	0.410	0.327	0.517	0.284	0.437	0.319	0.444
(21)	0.491	-0.145	0.694	-0.157	0.490	-0.093	0.593	-0.048
Ave	0.511	0.250	0.581	0.327	0.504	0.329	0.495	0.434

30 samples of each training condition are used to form the validation set. To train the LSTM-based fault-tolerant soft sensor using the proposed 2D-GDRO framework, an LSTM model with a hidden dimension of 15 and a sequence length of 5 is used as the basic model. The Adam optimizer with a learning rate of 5e-4 and a batch size of 64 is chosen for mini-batch SGD. The early stop strategy with a patience of 10 is implemented. The step size of the exponentiated gradient ascent algorithm is set to 0.1. The model hyperparameter C is fixed at 1.

Table III shows the fault tolerance performance of soft sensors on the TEP dataset, and the last column report the average accuracy among all fault conditions as the test sets. Due to distributional discrepancies between training and test faults, ERM performs poorly under new fault conditions, resulting in higher RMSE and lower R^2. IRM improves fault tolerance by learning invariant features across conditions, but its performance is inconsistent, showing large variations across different faults. GDRO, by optimizing for the worst-case risk over an uncertainty set, provides a more robust training solution and achieves reasonable fault tolerance performance. However, its effectiveness is limited by the small number of existing faults in the training set, leading to suboptimal results under some fault conditions. In comparison, the proposed 2D-GDRO outperforms all comparison frameworks by introducing a 2D uncertainty set through sample reweighting. 2D-GDRO achieves the lowest average RMSE and the highest average R^2, demonstrating its superior fault tolerance under new faults. As shown in Fig. 5, 2D-GDRO performes best on challenging fault scenarios like IDV(12), highlighting its robustness in handling complex fault conditions.

Taking IDV(12) as an example, we illustrate the evolution of the sample weights $\mathbf{w}$ at different epochs during training in Fig. 6. To construct the worst-case scenario by optimizing the sample weights, samples exhibiting significant errors are expected to receive higher weights within each group. Consequently, a large number of samples are assigned high weights at the beginning, which reflects the weak performance of the initial model. As training progressed, the weights of all samples tend to become more uniform, resulting in a notable decrease in the number of samples with larger weights. In pursuit of fault tolerance, the 2D-GDRO-based LSTM model consistently prioritizes poor-performing samples during the

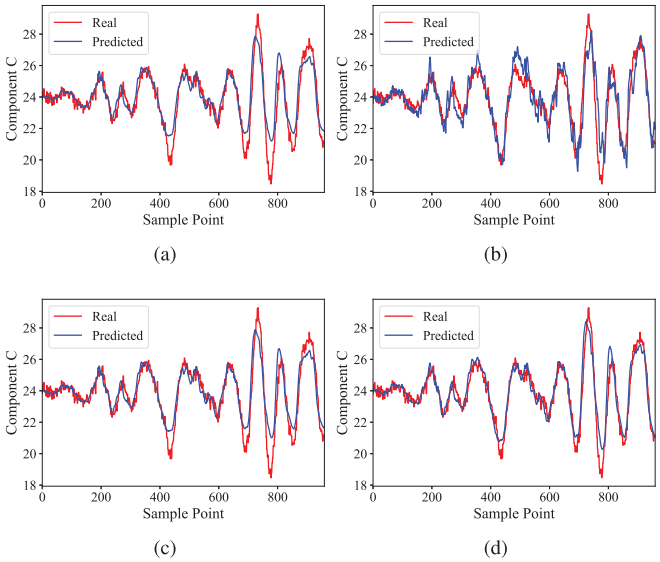

Fig. 5. Prediction results for component C in purge gas under fault IDV(12). (a) ERM (b) IRM (c) GDRO (d) 2D-GDRO.

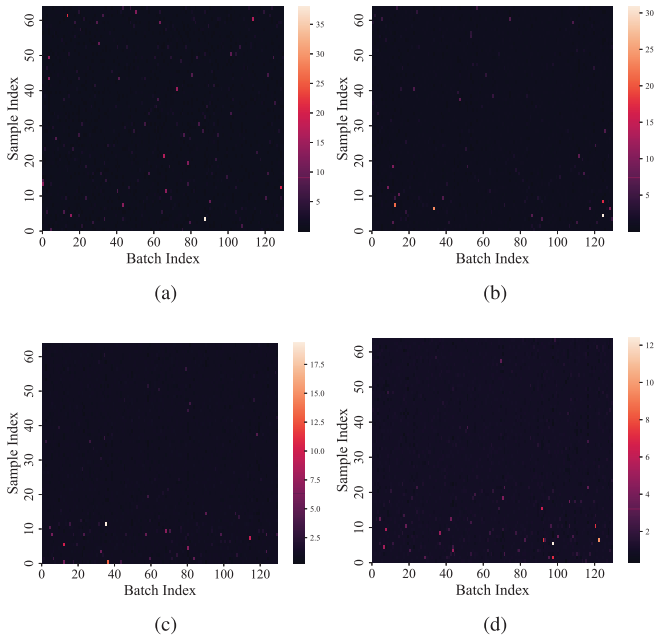

Fig. 6. Sample weights at different epochs during training. (a) Epoch = 0 (b) Epoch = 5 (c) Epoch = 10 (d) Epoch = 40.

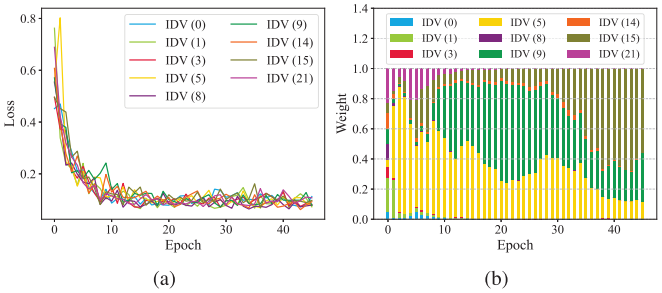

Fig. 7. Loss and mixing coefficients of each condition during training. (a) Group loss (b) Mixing coefficients.

Authorized licensed use limited to: UNIVERSIDADE FEDERAL DE CAMPINA GRANDE. Downloaded on April 13,2026 at 20:17:22 UTC from IEEE Xplore. Restrictions apply.

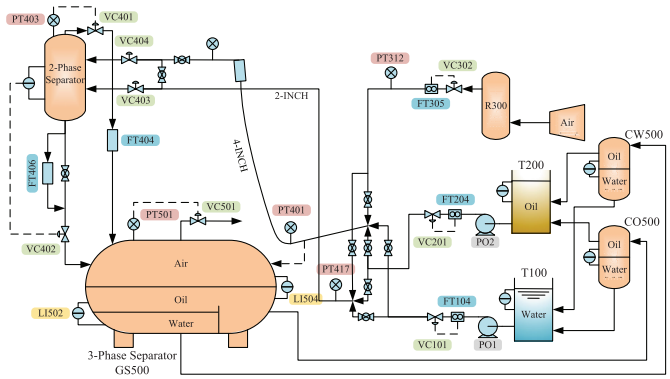

Fig. 8. Process flow diagram of the TPFF.

training process. Importantly, these poor-performing samples are not specific or invariant as the model is constantly evolving and refining. Moreover, we depict the evolution of the group loss and mixing coefficients $\boldsymbol{\alpha}$ of each fault condition during training. As shown in Fig. 7, the mixing coefficients of groups with significant average loss are updated to larger values. This optimization facilitates the construction of the worst-case scenario, contributing to the robustness of the fault-tolerant soft sensor modeling and prediction.

B. Three-Phase Flow Facility

TPFF is a real industrial testbed specifically engineered to deliver a controlled and precisely measured flow rate of water, oil, and air to a pressurized system [41]. Fig. 8 shows the process flow diagram of the TPFF. Following the mixture of water, oil, and air, the fluid proceeds through either a 4" catenary riser or a 2" vertical riser. Both flowlines are linked to a two-phase separator situated atop a 10.5-meter-high platform. However, they remain isolated from each other via manual valve manifolds positioned at each end of the flowlines. Subsequently, the fluid mixtures undergo separation in a three-phase separator located at ground level. Additionally, an alternative 4" bypass line permits direct flow from the mixing point to the three-phase separator, bypassing the riser and two-phase separator. The air is then released into the atmosphere, while the emulsions of oil and water undergo separation in their respective coalescers before being returned to their respective storage tanks. The entire TPFF system is managed by a fieldbus-based supervisory, control, and data acquisition (SCADA) system.

The complete dataset of the TPFF can be downloaded from the website[2]. As listed in Table IV, we select 16 process variables as the input and the pressure in the three-phase separator as the output of soft sensors. In the experiment, besides the normal operation, 6 different fault conditions are generated, including 3 actuator faults and 3 process faults. Detailed fault description is listed in Table V. In order to evaluate the fault tolerance performance under new fault conditions, we employ 6-fold cross-validation and report the average accuracy. The data samples come from the SCADA system. The last 300 samples of each training condition are used to form the validation set, and the remaining samples are used as the training set. To train an LSTM-based fault-tolerant soft sensor with the proposed 2D-GDRO framework, an LSTM with a hidden dimension of 20 and a sequence length of 20 is used as the basic model. The Adam optimizer with a learning rate of 2e-3 and a batch size of 256 is selected for mini-batch SGD. The early stop strategy with a patience of 10 is employed. The step size of the exponentiated gradient ascent algorithm is set to 0.03. The model hyperparameter C is set to 1.

Table VI illustrates the fault tolerance of soft sensors on the TPFF dataset. The ERM-based soft sensor exhibits poor fault

[2]TPFF: https://ieee-dataport.org/documents/three-phase-flow-facility

TABLE IV
VARIABLE DESCRIPTION OF THE TPFF

Variable	Location	Description
x_1	PT312	Air delivery pressure
x_2	PT401	Pressure in the bottom of the riser
x_3	PT408	Pressure in top of the riser
x_4	PT403	Pressure in top separator
x_5	PT408	Differential pressure (PT401-PT408)
x_6	PT403	Differential pressure over VC404
x_7	FT305	Flow rate of input air
x_8	FT104	Flow rate of input water
x_9	LI405	Level of top separator
x_{10}	FT407	Density of top riser
x_{11}	FT104	Density of water input
x_{12}	LI504	Level of three-phase separator
x_{13}	VC501	Position of valve VC501
x_{14}	VC302	Position of valve VC302
x_{15}	VC101	Position of valve VC101
x_{16}	PO1	Water pump current

TABLE V
FAULT DESCRIPTION OF THE TPFF

Fault	Description	Fault Type
f0	Normal operation	–
f1	Air line blockage	Actuator fault
f2	Water line blockage	Actuator fault
f3	Top separator input blockage	Actuator fault
f4	Open direct bypass	Process fault
f5	Slugging conditions	Process fault
f6	Pressurization of the 2" line	Process fault

TABLE VI
SOFT SENSING PERFORMANCE OF DIFFERENT FRAMEWORKS ON THE TPFF

	ERM		IRM		GDRO		2D-GDRO	
Fault	RMSE	R^2	RMSE	R^2	RMSE	R^2	RMSE	R^2
f1	3.88E-03	0.015	1.48E-03	0.422	3.86E-03	0.123	2.10E-03	0.406
f2	6.50E-04	0.586	8.07E-04	0.201	6.05E-04	0.681	6.31E-04	0.747
f3	1.17E-02	-0.391	3.07E-02	-0.177	1.32E-02	-0.318	1.26E-02	-0.337
f4	3.06E-03	-0.047	2.33E-03	-0.401	2.57E-03	0.076	2.29E-03	-0.104
f5	1.83E-03	-0.542	1.67E-03	0.133	1.56E-03	0.307	1.38E-03	0.679
f6	5.92E-04	0.704	8.87E-04	-0.052	5.70E-04	0.809	7.24E-04	0.716
Ave	3.62E-03	0.054	6.31E-03	0.021	3.73E-03	0.280	3.28E-03	0.351

Authorized licensed use limited to: UNIVERSIDADE FEDERAL DE CAMPINA GRANDE. Downloaded on April 13,2026 at 20:17:22 UTC from IEEE Xplore. Restrictions apply.

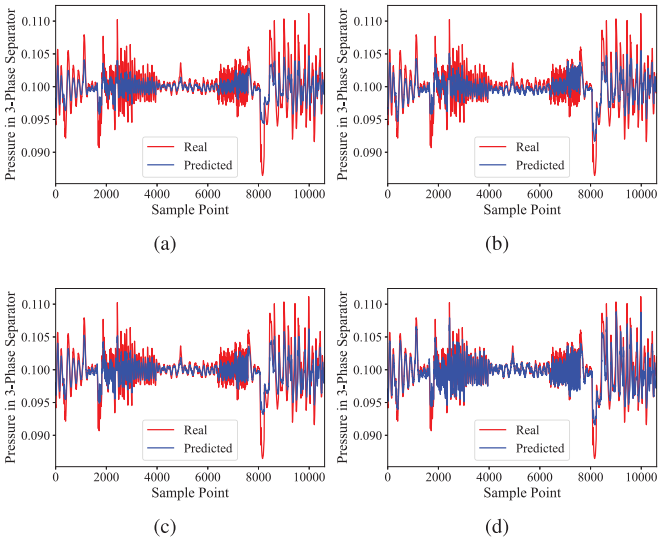

Fig. 9. Prediction results for the pressure in the three-phase separator under fault f5. (a) ERM (b) IRM (c) GDRO (d) 2D-GDRO.

TABLE VII
RESULTS OF ABLATION STUDY AND SENSITIVITY ANALYSIS

Ablation Study			Sensitivity Analysis		
Case	RMSE	R^2	K	RMSE	R^2
w/o f1	1.99E-03	-0.803	1	2.17E-03	-0.728
w/o f2	1.85E-03	-0.040	2	2.01E-03	-0.808
w/o f3	2.11E-03	-1.410	3	1.84E-03	-0.187
w/o f4	2.06E-03	0.190	4	1.62E-03	0.343
w/o f6	1.90E-03	-0.660	6	1.38E-03	0.679

tolerance, especially under faults f3 and f5, due to its inability to adapt to unseen fault distributions. The IRM framework improves soft sensing performance over ERM by learning invariant features, achieving better results in fault scenarios such as fault f1. However, its average R^2 remains low, and its performance varies significantly across different faults. The GDRO framework provides a more robust solution by minimizing the worst-case risk. It shows improvement over IRM, particularly in fault f5, but its overall performance is still limited, with an average RMSE of 3.73E-03 and R^2 of 0.280. In contrast, the proposed 2D-GDRO achieves the best fault tolerance performance, with the lowest average RMSE and the highest average R^2. As shown in Fig. 9, 2D-GDRO outperforms all other frameworks in challenging faults such as fault f5 $R^2 = 0.679$, demonstrating its superior fault tolerance capability under new faults.

An ablation study is conducted using fault f5 as the test set. We evaluate five distinct training cases: 1) w/o f1: Cases excluding f1 from the training set. 2) w/o f2: Cases excluding f2 from the training set. 3) w/o f3: Cases excluding f3 from the training set. 4) w/o f4: Cases excluding f4 from the training set. 5) w/o f6: Cases excluding f6 from the training set. Each training set contains a different number of fault conditions. For instance, the training set for w/o f1 can include four fault conditions, such as {f0, f2, f3, f4, f6}, or two fault conditions,

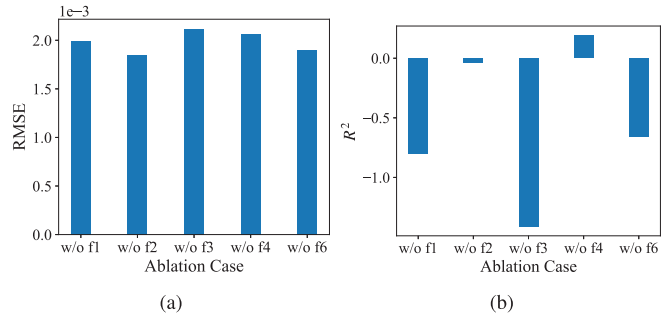

Fig. 10. Ablation study on distinct training cases under fault f5. (a) RMSE (b) R^2.

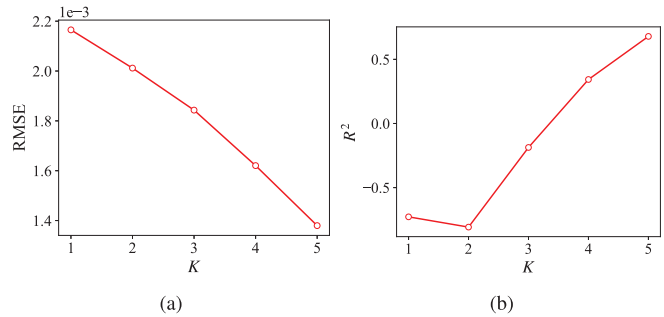

Fig. 11. Sensitivity analysis on the number of fault conditions under fault f5. (a) RMSE (b) R^2.

such as {f0, f2, f6}. The results are presented in Table VII and Fig. 10. The findings show that the fault tolerance on the test set f5 deteriorates significantly when f3 is absent from the training set. Conversely, the inclusion or exclusion of f4 has little impact on the performance of the test set f5. Specifically, the slugging condition (f5) involves a situation where water accumulates at the base of the riser, obstructing airflow. This blockage causes pressure to build up until it is sufficient to flush both the water and the air out of the riser, which is similar to the effect caused by the blockage of the top separator input (f3), but different from the result caused by an open direct bypass (f4) significantly. It is suggested that new faults may share common characteristics with existing faults, thereby ensuring the effectiveness of the proposed 2D-GDRO framework. However, if the characteristics of a new fault differ substantially from those of the existing faults, the effectiveness of 2D-GDRO may be compromised.

Furthermore, we make a sensitivity analysis to assess the impact of the number of fault conditions K on the performance under fault f5. By systematically arranging and combining various fault conditions, we evaluate the soft sensing performance of 2D-GDRO for different numbers of fault conditions in the training set. As shown in Table VII and Fig. 11, as the number of fault conditions increases, the soft sensing accuracy of 2D-GDRO improves. This indicates that the number of fault conditions included in the training set significantly affects the fault tolerance of 2D-GDRO. Specifically, a larger number of fault conditions increases the likelihood of sharing similar characteristics with unseen new faults, thereby enhancing the fault tolerance of the soft sensor model.

Authorized licensed use limited to: UNIVERSIDADE FEDERAL DE CAMPINA GRANDE. Downloaded on April 13,2026 at 20:17:22 UTC from IEEE Xplore. Restrictions apply.

TABLE VIII
WILCOXON SIGNED-RANK TEST WITH $\alpha = 0.05$

2D-GDRO vs.	p-value	$< \alpha$	Hypothesis
ERM	0.000	TRUE	Reject
IRM	0.036	TRUE	Reject
GDRO	0.036	TRUE	Reject

C. Statistical Hypothesis Test

Statistical hypothesis tests enable more reliable claims in model comparison. To this end, we apply the Wilcoxon signed-rank test [42] for pairwise comparisons between the proposed 2D-GDRO and the comparison frameworks, including ERM, IRM, and GDRO, in terms of R^2 across multiple fault conditions. The null hypotheses are separately formulated, asserting that the accuracy of the proposed 2D-GDRO is not superior to that of ERM, IRM, and GDRO. As shown in Table VIII, all p-values are below the significance level α, allowing us to reject the null hypotheses with 95% confidence. This indicates that the accuracy of the proposed 2D-GDRO is significantly higher than that of the comparison frameworks ERM, IRM, and GDRO.

V. CONCLUSION

In this article, a 2D-GDRO framework is proposed for fault-tolerant soft sensor modeling, accompanied by a 2D uncertainty set and triple-interleaved optimization algorithms. The 2D-GDRO framework does not presuppose specific fault types and it is applicable to various soft sensor models based on deep learning. Experimental validation using two industrial processes has demonstrated the superior fault tolerance performance of 2D-GDRO over existing training frameworks, showcasing excellent average accuracy under new fault conditions. These findings highlight our contributions in advancing fault-tolerant soft sensor modeling, with promising implications for enhancing the safety and reliability in industrial operations. Fault tolerance is one aspect of reliability of soft sensors. In future work, other aspects of reliability, such as interpretability, can be explored.

REFERENCES

[1] I. Ahmed, G. Jeon, and F. Piccialli, "From artificial intelligence to explainable artificial intelligence in industry 4.0: A survey on what, how, and where," *IEEE Trans. Ind. Informat.*, vol. 18, no. 8, pp. 5031–5042, Aug. 2022.

[2] P. Zhou, S.-W. Lu, and T. Chai, "Data-driven soft-sensor modeling for product quality estimation using case-based reasoning and fuzzy-similarity rough sets," *IEEE Trans. Autom. Sci. Eng.*, vol. 11, no. 4, pp. 992–1003, Oct. 2014.

[3] J. Zhu, M. Jia, Y. Zhang, W. Zhou, H. Deng, and Y. Liu, "Domain adaptation graph convolution network for quality inferring of batch processes," *Chemometric Intell. Lab. Syst.*, vol. 243, Dec. 2023, Art. no. 105028.

[4] C. Liu, Y. Wang, C. Yang, H. Leung, and X. Yin, "Adaptive attention-driven manifold regularization for deep learning networks: Industrial predictive modeling applications and beyond," *IEEE Trans. Ind. Electron.*, vol. 71, no. 10, pp. 13439–13449, Oct. 2024.

[5] X. Zhang, C. Song, J. Zhao, Z. Xu, and X. Deng, "Spatial–temporal causality modeling for industrial processes with a knowledge-data guided reinforcement learning," *IEEE Trans. Ind. Informat.*, vol. 20, no. 4, pp. 5634–5646, Apr. 2024.

[6] Y. Zhao, X. Deng, J. Zhang, and P. Wang, "Spatio-temporal regularized stochastic configuration network for supervised and semi-supervised soft sensor development," *IEEE Trans. Autom. Sci. Eng.*, vol. 22, pp. 10960–10972, 2025.

[7] W. Xiong, Y. Li, Y. Zhao, and B. Huang, "Adaptive soft sensor based on time difference Gaussian process regression with local time-delay reconstruction," *Chem. Eng. Res. Design*, vol. 117, pp. 670–680, Jan. 2017.

[8] W. Shao, W. Han, C. Xiao, L. Chen, M.-Q. Yu, and J. Chen, "Semi-supervised robust hidden Markov regression for large-scale time-series industrial data analytics and its applications to soft sensing," *IEEE Trans. Autom. Sci. Eng.*, vol. 22, pp. 5143–5157, 2025.

[9] C. Shang, B. Huang, F. Yang, and D. Huang, "Probabilistic slow feature analysis-based representation learning from massive process data for soft sensor modeling," *AIChE J.*, vol. 61, no. 12, pp. 4126–4139, 2015.

[10] X. Yuan, B. Huang, Y. Wang, C. Yang, and W. Gui, "Deep learning-based feature representation and its application for soft sensor modeling with variable-wise weighted SAE," *IEEE Trans. Ind. Informat.*, vol. 14, no. 7, pp. 3235–3243, Jul. 2018.

[11] L. Chen, Y. Xu, Q.-X. Zhu, and Y.-L. He, "Adaptive multi-head self-attention based supervised VAE for industrial soft sensing with missing data," *IEEE Trans. Autom. Sci. Eng.*, vol. 21, no. 3, pp. 3564–3575, Mar. 2024.

[12] X. Jiang and Z. Ge, "Augmented multidimensional convolutional neural network for industrial soft sensing," *IEEE Trans. Instrum. Meas.*, vol. 70, pp. 1–10, 2021.

[13] X.-F. Yuan, L. Li, Y. Shardt, Y.-L. Wang, and C.-H. Yang, "Deep learning with spatiotemporal attention-based LSTM for industrial soft sensor model development," *IEEE Trans. Ind. Electron.*, vol. 68, no. 5, pp. 4404–4414, May 2020.

[14] M. Jia, D. Xu, T. Yang, Y. Liu, and Y. Yao, "Graph convolutional network soft sensor for process quality prediction," *J. Process Control*, vol. 123, pp. 12–25, Mar. 2023.

[15] Z. Geng, Z. Chen, Q. Meng, and Y. Han, "Novel transformer based on gated convolutional neural network for dynamic soft sensor modeling of industrial processes," *IEEE Trans. Ind. Informat.*, vol. 18, no. 3, pp. 1521–1529, Mar. 2022.

[16] L. Pan et al., "TMoE-P: Toward the Pareto optimum for multivariate soft sensors," *IEEE Trans. Autom. Sci. Eng.*, vol. 22, pp. 9315–9326, 2025.

[17] X. Shi, Q. Kang, H. Bao, W. Huang, and J. An, "Principal component-based semi-supervised extreme learning machine for soft sensing," *IEEE Trans. Autom. Sci. Eng.*, vol. 21, no. 3, pp. 3966–3976, Mar. 2024.

[18] Y. Jiang, S. Yin, J. Dong, and O. Kaynak, "A review on soft sensors for monitoring, control, and optimization of industrial processes," *IEEE Sensors J.*, vol. 21, no. 11, pp. 12868–12881, Jun. 2021.

[19] Y. S. Perera, D. A. A. C. Ratnaweera, C. H. Dasanayaka, and C. Abeykoon, "The role of artificial intelligence-driven soft sensors in advanced sustainable process industries: A critical review," *Eng. Appl. Artif. Intell.*, vol. 121, May 2023, Art. no. 105988.

[20] R. Zhai, J. Zheng, Z. Song, and Z. Ge, "Reliable soft sensors with an inherent process graph constraint," *IEEE Trans. Ind. Informat.*, vol. 20, no. 6, pp. 8798–8806, Jun. 2024.

[21] X. Zhang, C. Song, J. Zhao, and X. Deng, "Domain adaptation mixture of Gaussian processes for online soft sensor modeling of multimode processes when sensor degradation occurs," *IEEE Trans. Ind. Informat.*, vol. 18, no. 7, pp. 4654–4664, Jul. 2022.

[22] X. Zhang, C. Song, B. Huang, and J. Zhao, "Bayesian-based causal structure inference with a domain knowledge prior for stable and interpretable soft sensing," *IEEE Trans. Cybern.*, vol. 54, no. 10, pp. 6081–6094, Oct. 2024.

[23] H. Kay et al., "Constructing a symbolic regression-based interpretable soft sensor for industrial data analytics and product quality control," *Ind. Eng. Chem. Res.*, vol. 63, no. 9, pp. 4083–4092, Mar. 2024.

[24] M. Jia, J. Hu, Y. Liu, Z. Gao, and Y. Yao, "Topology-guided graph learning for process fault diagnosis," *Ind. Eng. Chem. Res.*, vol. 62, no. 7, pp. 3238–3248, 2023.

[25] H. Chen, H. Luo, B. Huang, B. Jiang, and O. Kaynak, "Transfer learning-motivated intelligent fault diagnosis designs: A survey, insights, and perspectives," *IEEE Trans. Neural Netw. Learn. Syst.*, vol. 35, no. 3, pp. 2969–2983, Mar. 2024.

[26] Q.-X. Zhu, Y.-S. Qian, N. Zhang, Y.-L. He, and Y. Xu, "Multi-scale transformer-CNN domain adaptation network for complex processes fault diagnosis," *J. Process Control*, vol. 130, Oct. 2023, Art. no. 103069.

Authorized licensed use limited to: UNIVERSIDADE FEDERAL DE CAMPINA GRANDE. Downloaded on April 13,2026 at 20:17:22 UTC from IEEE Xplore. Restrictions apply.

[27] M. Jia, D. Xu, T. Yang, Y. Yao, and Y. Liu, "Graph-guided masked autoencoder for process anomaly detection," *Process Saf. Environ. Protection*, vol. 186, pp. 1345–1357, Jun. 2024.
[28] Z. Zhang, J. Zhu, S. Zhang, and F. Gao, "Process monitoring using recurrent Kalman variational auto-encoder for general complex dynamic processes," *Eng. Appl. Artif. Intell.*, vol. 123, Aug. 2023, Art. no. 106424.
[29] Z. Gao, S. X. Ding, and C. Cecati, "Real-time fault diagnosis and fault-tolerant control," *IEEE Trans. Ind. Electron.*, vol. 62, no. 6, pp. 3752–3756, Jun. 2015.
[30] H. Chen and B. Huang, "Fault-tolerant soft sensors for dynamic systems," *IEEE Trans. Control Syst. Technol.*, vol. 31, no. 6, pp. 2805–2818, Nov. 2023.
[31] L. Ma, J. Dong, C. Hu, and K. Peng, "A novel decentralized detection framework for quality-related faults in manufacturing industrial processes," *Neurocomputing*, vol. 428, pp. 30–41, Mar. 2021.
[32] X. Zhang, C. Song, J. Zhao, Z. Xu, and X. Deng, "Deep subdomain learning adaptation network: A sensor fault-tolerant soft sensor for industrial processes," *IEEE Trans. Neural Netw. Learn. Syst.*, vol. 35, no. 7, pp. 9226–9237, Jul. 2024.
[33] Y. Liu, D. Ni, and Z. Wang, "A fault-tolerant soft sensor algorithm based on long short-term memory network for uneven batch process," *Processes*, vol. 12, no. 3, p. 495, Feb. 2024.
[34] Z. Y. Ding, J. Y. Loo, S. G. Nurzaman, C. P. Tan, and V. M. Baskaran, "A zero-shot soft sensor modeling approach using adversarial learning for robustness against sensor fault," *IEEE Trans. Ind. Informat.*, vol. 19, no. 4, pp. 5891–5901, Apr. 2023.
[35] P. Kesavan and J. H. Lee, "Diagnostic tools for multivariable model-based control systems," *Ind. Eng. Chem. Res.*, vol. 36, no. 7, pp. 2725–2738, Jul. 1997.
[36] C. Zhao and W. Shen, "Adaptive open set domain generalization network: Learning to diagnose unknown faults under unknown working conditions," *Rel. Eng. Syst. Saf.*, vol. 226, Oct. 2022, Art. no. 108672.
[37] X. Chen, B. Zhang, C. Zhao, J. Ding, and W. Wang, "From coarse to fine: Hierarchical zero-shot fault diagnosis with multigrained attributes," *IEEE Trans. Fuzzy Syst.*, vol. 32, no. 5, pp. 2837–2849, May 2024.
[38] K. Chaudhuri, C. Monteleoni, and A. D. Sarwate, "Differentially private empirical risk minimization," *J. Mach. Learn. Res.*, vol. 12, no. 3, pp. 1069–1109, 2011.
[39] S. Sagawa, P. W. Koh, T. B. Hashimoto, and P. Liang, "Distributionally robust neural networks for group shifts: On the importance of regularization for worst-case generalization," 2019, *arXiv:1911.08731*.
[40] J. J. Downs and E. F. Vogel, "A plant-wide industrial process control problem," *Comput. Chem. Eng.*, vol. 17, no. 3, pp. 245–255, Mar. 1993.
[41] C. Ruiz-Cárcel, Y. Cao, D. Mba, L. Lao, and R. T. Samuel, "Statistical process monitoring of a multiphase flow facility," *Control Eng. Pract.*, vol. 42, pp. 74–88, Sep. 2015.
[42] S. M. Taheri and G. Hesamian, "A generalization of the Wilcoxon signed-rank test and its applications," *Statist. Papers*, vol. 54, no. 2, pp. 457–470, May 2013.

Xiangrui Zhang received the B.Eng. degree in automation from the College of Control Science and Engineering, China University of Petroleum (East China), Qingdao, China, in 2020. He is currently pursuing the Ph.D. degree in control science and engineering with Zhejiang University, Hangzhou, China.

From September 2024 to February 2025, he was a Visiting Ph.D. Student with the Department of Chemical and Biological Engineering, The Hong Kong University of Science and Technology. His research interests include process data analysis, industrial artificial intelligence, process modeling and monitoring, soft sensor, and fault diagnosis.

Chunyue Song received the B.Eng. degree in automation of chemical engineering and the Ph.D. degree in control science and engineering from Zhejiang University, Hangzhou, China, in 1994 and 2003, respectively.

From 2003 to 2005, he was a Post-Doctoral Fellow with the College of Computer Science, Zhejiang University. From 2006 to 2008, he was a Visiting Researcher with the Institute for Systems Research, University of Maryland, College Park, USA. Since 2005, he has been with Zhejiang University and currently a Professor of Control Science and Engineering with the College of Control Science and Engineering. His research interests include intelligent decision making, optimal control of nonlinear systems, data analysis, and stochastic control.

Jun Zhao received the B.Eng. and M.Eng. degrees from the Department of Chemical Engineering, Zhejiang University, Hangzhou, China, in 1993 and 1996, respectively, and the Ph.D. degree from the College of Control Science and Engineering, Zhejiang University, in 2000.

He is currently an Associate Professor with the College of Control Science and Engineering, Zhejiang University. His research interests include model predictive control, distributed system control, and data-driven modeling for dynamic systems.

Biao Huang (Fellow, IEEE) received the B.Sc. and M.Sc. degrees in automatic control from Beijing University of Aeronautics and Astronautics, Beijing, China, in 1983 and 1986, respectively, and the Ph.D. degree in process control from the University of Alberta, Edmonton, AB, Canada, in 1997.

He joined the University of Alberta as an Assistant Professor with the Department of Chemical and Materials Engineering in 1997 and is currently a Professor. He was the Natural Sciences and Engineering Research Council of Canada's Industrial Research Chair in Control of Oil Sands Processes and also Alberta Innovates Technology Futures Industry Chair in Process Control. He has applied his expertise extensively in industrial practice. His research interests include process control, system identification, control performance assessment, Bayesian methods, and state estimation.

Dr. Huang is a fellow of Canadian Academy of Engineering and the Chemical Institute of Canada. He was a recipient of Germany's Alexander von Humboldt Research Fellowship, Canadian Chemical Engineer Society's Syncrude Canada Innovation and D. G. Fisher Awards, APEGA Summit Research Excellence Award, University of Alberta McCalla and Killam Professorship Awards, Petro-Canada Young Innovator Award, and the Best Paper Award from the *Journal of Process Control*.

Authorized licensed use limited to: UNIVERSIDADE FEDERAL DE CAMPINA GRANDE. Downloaded on April 13,2026 at 20:17:22 UTC from IEEE Xplore. Restrictions apply.