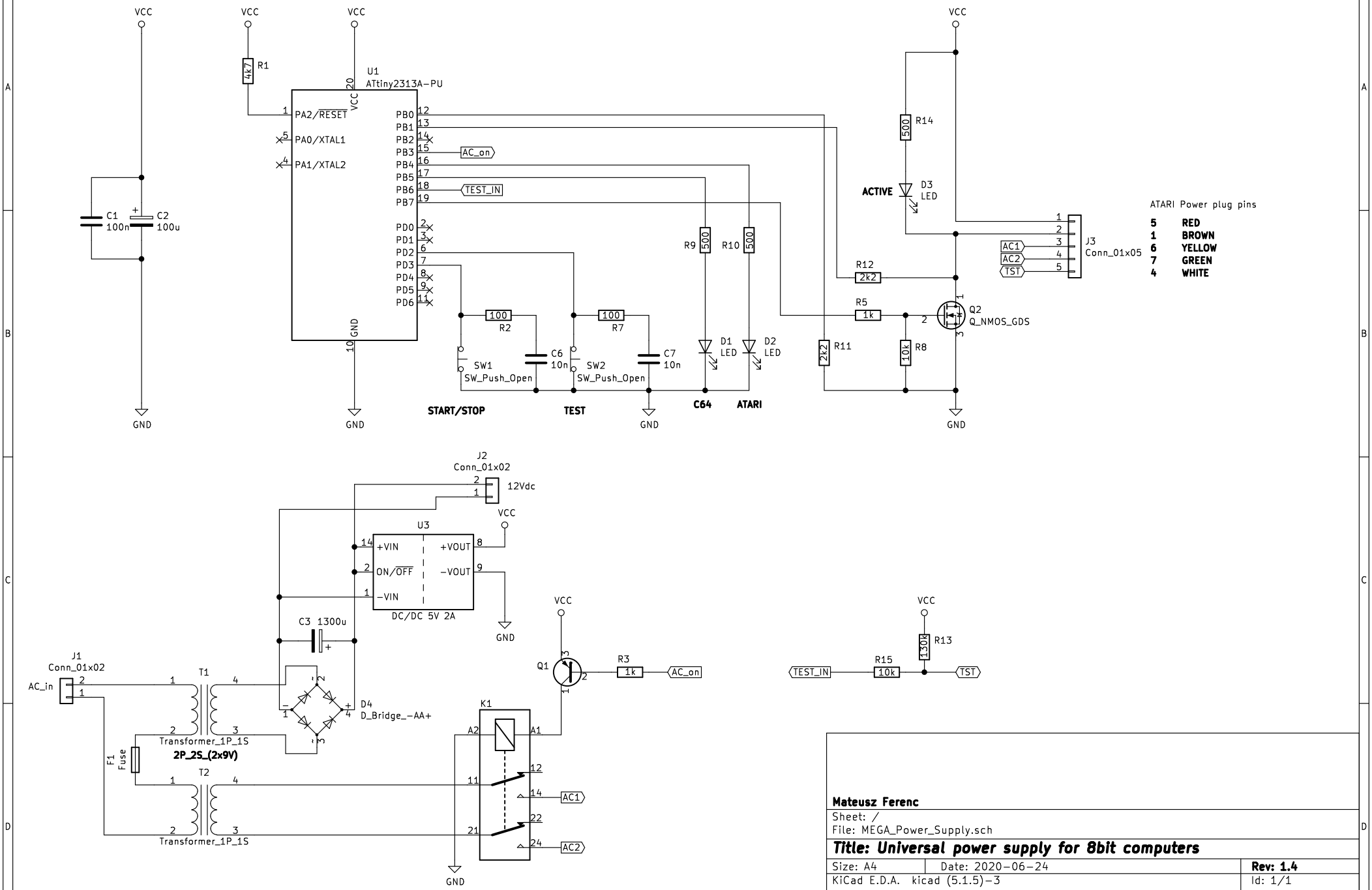

Mateusz Ferenc

Sheet: /

File: MEGA_Power_Supply.sch

Title: Universal power supply for 8bit computers

Size: A4	Date: 2020-06-24	**Rev: 1.4**
KiCad E.D.A. kicad (5.1.5)-3		Id: 1/1