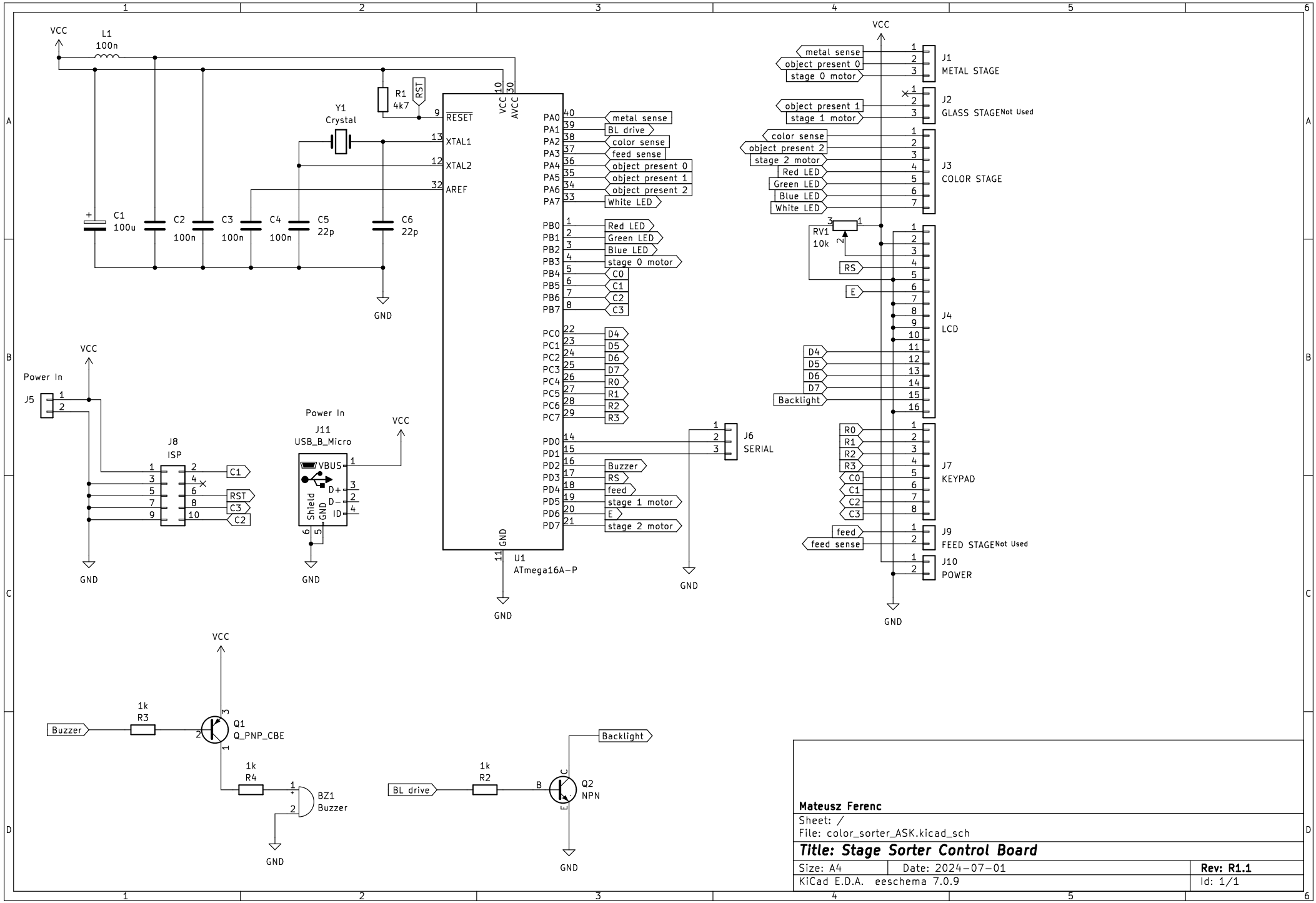

Mateusz Ferenc

Sheet: /

File: color_sorter_ASK.kicad_sch

Title: Stage Sorter Control Board

Size: A4	Date: 2024-07-01	**Rev: R1.1**
KiCad E.D.A. eeschema 7.0.9		Id: 1/1