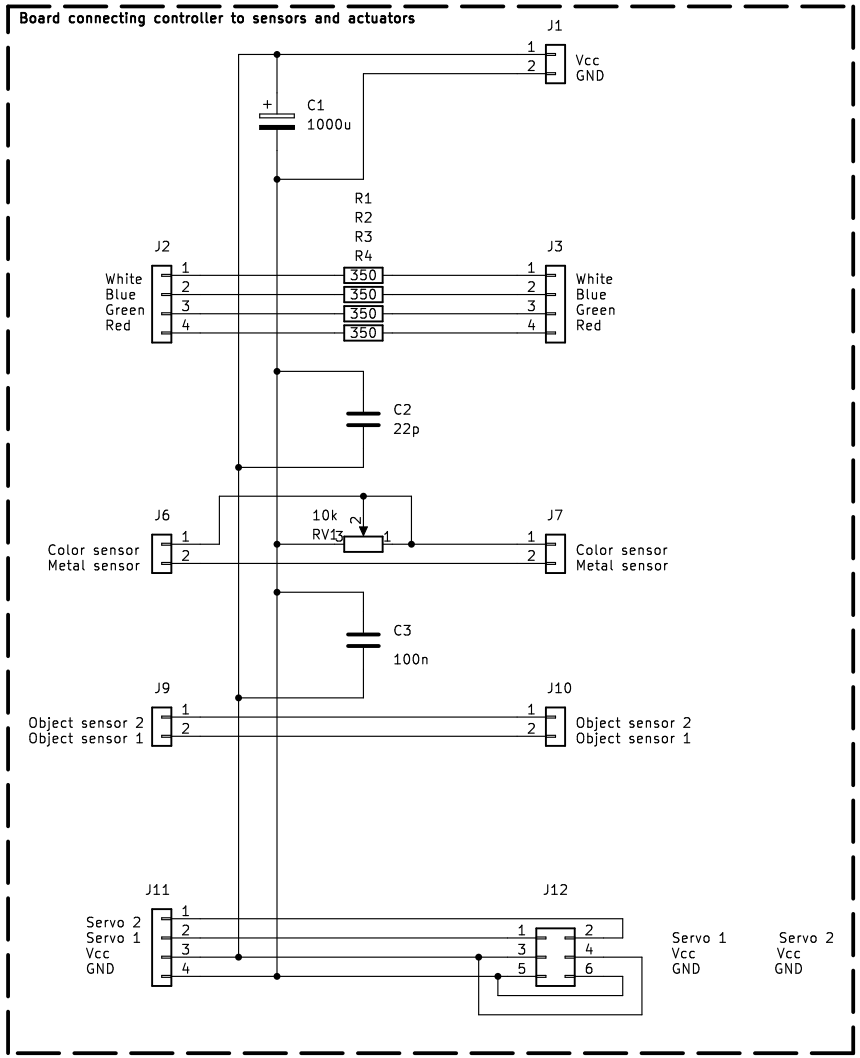

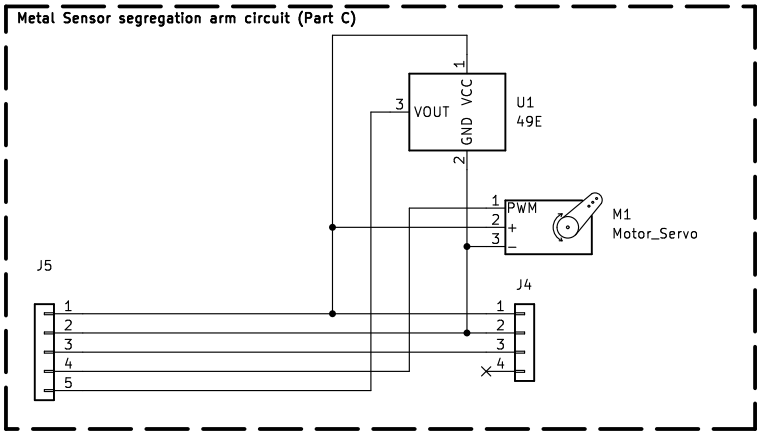

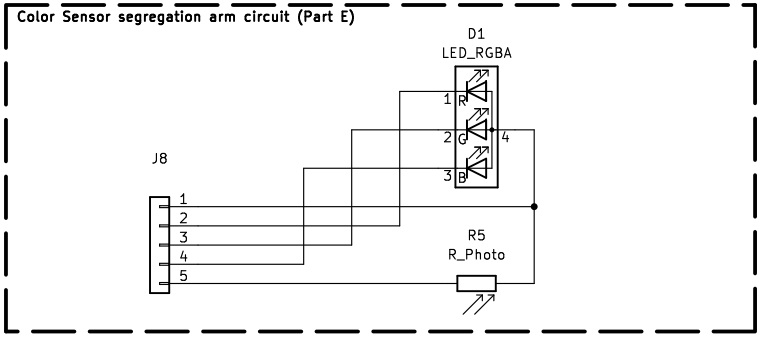

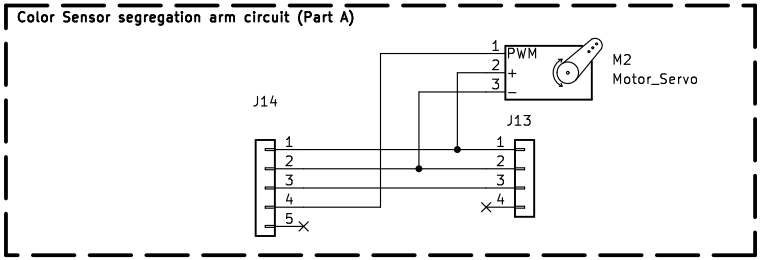

Mateusz Ferenc

Sheet: /
File: sorter_sensor_board.kicad_sch

Title: Stage Sorter sensing board

Size: A4	Date: 2024-07-01	**Rev: R1.2**
KiCad E.D.A. kicad 7.0.9		Id: 1/1