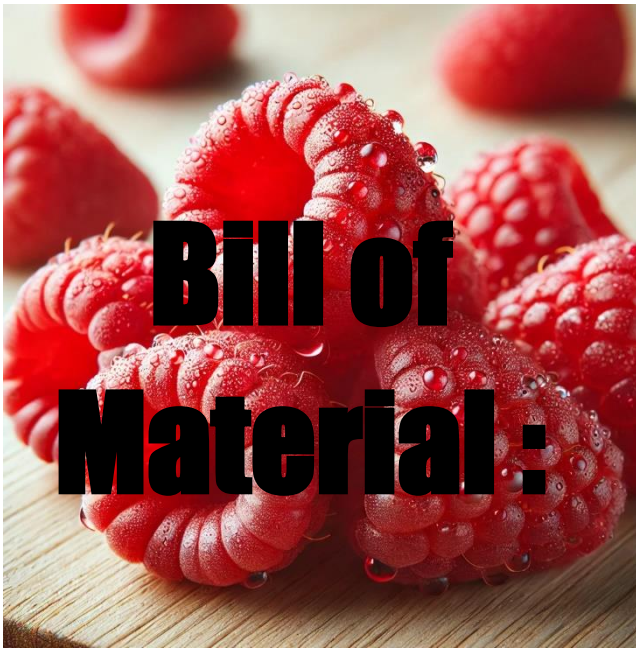

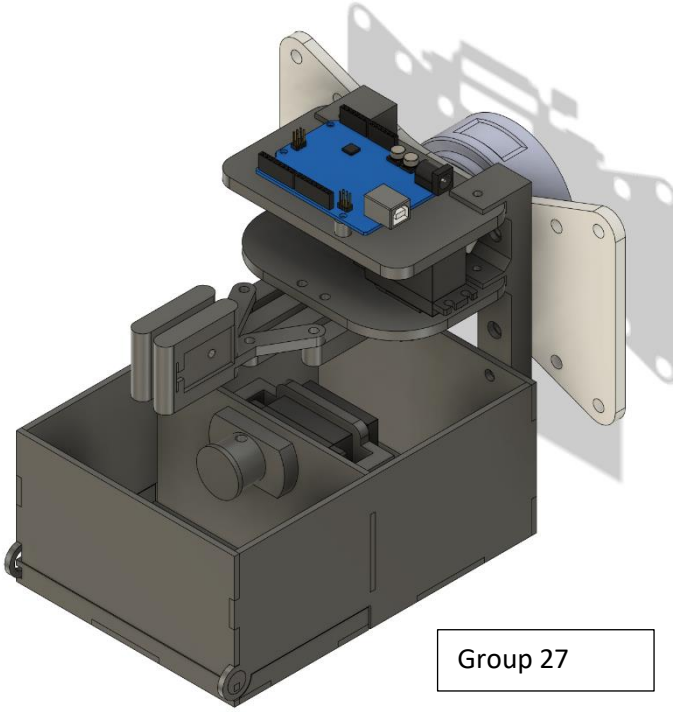

Group 27

No	Part Name	Part Number	Description	Material	Part Type	Acquisition	Qty
1	Robot Support	RS-001	Gripper support on the robot for fixing it	3D print	Attachment	Produced	2
2	Motor gear	MG-002	Gear directly on the servo motor that drives the mechanisms	3D print	Mechanical	Produced	1
3	Interlocked gear	IG-003	Gear connected to the other gear and the second jaw	3D print	Mechanical	Produced	1
4	Arduino Board	AB-004	Board arduino that is the brain of the electrical part	-	Electrical	Supplied	1
5	Breadboard	BB-005	Board used to create circuits without the need to solder the components	-	Electrical	Supplied	1
6	Servomotor	SM-006	These motors are used to close the jaws and open the reservoir.	-	Electrical	Supplied	2
7	Cables	C-007	All these cables manage the entire electronic network for the motors, the sensors.	-	Electrical	Buy	22
8	Résistor	R-008	To prevent damaging the LEDs	-	Electrical	Supplied	4
9	Power supply	P-009	To power the circuit and especially the two servos	-	Electrical	Supplied	1
10	LED	L-010	To indicate the status of the motors and the conductivity status	-	Electrical	Supplied	4
11	Pressure Sensor	PS-011	To measure the pressure between the jaws	-	Electrical	Supplied	1
12	Wire spool	WS-012	For the conductivity sensor	-	Electrical	Recycled	1
13	Sandpaper	SP-013	On each gripper finger to handle the raspberry.	-	Mechanical	Recycled	2

14	Top plate for Arduino	TP-014	Plate to support the claw servo and the Arduino	MDF	Mechanical	Produced	1
15	Bottom plate for the claw servo	BP-015	Plate to mount the gripper motor and the gripper	3D print	Mechanical	Produced	1
16	Clamp	CL-016	Gripper fingers for picking raspberries, supporting the pressure sensor and the conductivity sensor.	3D print	Mechanical	Produced	2
17	Articulated arms	AA-017	arms that connect the grippers or tools to the fixed base and allow for their movement	3D print	Mechanical	Produced	2
18	Tank	T-018	This reservoir is assembled from several recycled MDF panels, cut and glued together to store cable management and raspberries	MDF	Storage	Produced	1
19	Attach of the reservoir's servo	AR-019	Fixing the servo of the reservoir to the assembly mechanism	3D print	Storage	Produced	1
20	Cable winder	CW-020	Reel for the string of the reservoir to open and close the reservoir opening	3D print	Storage	Produced	1
21	String	S-021	Opening of the reservoir	-	Storage	Recycled	1
22	3D inserts	I-022	To directly fix the machine in the robot with 4 screws	-	Attachment	Buy	4
23	Screws	SC-023	To fix all the different parts	-	Mechanical	Supplied	21
24	Nuts	N-024	To fix all the different parts	-	Mechanical	Supplied	19
25	washer	W-025	-	-	Mechanical	Supplied	19