Ecole Polytechnique
Fédérale de Lausanne

Project ME-320

Final Report

Groupe 27:
Cyran Kühni
André Cruz
Laura Cheng
Gaël Vignau
Mathelyo Favre-reguillon

Professor:
Josie hughes

March 31, 2026

Contents

1 Choice of mechanism 2

2 Choice of Sensor 2

3 Choice of material 2

4 Reflection on the design 3

5 Sustainability & Scalability 3

6 Literature/Patent Search 3

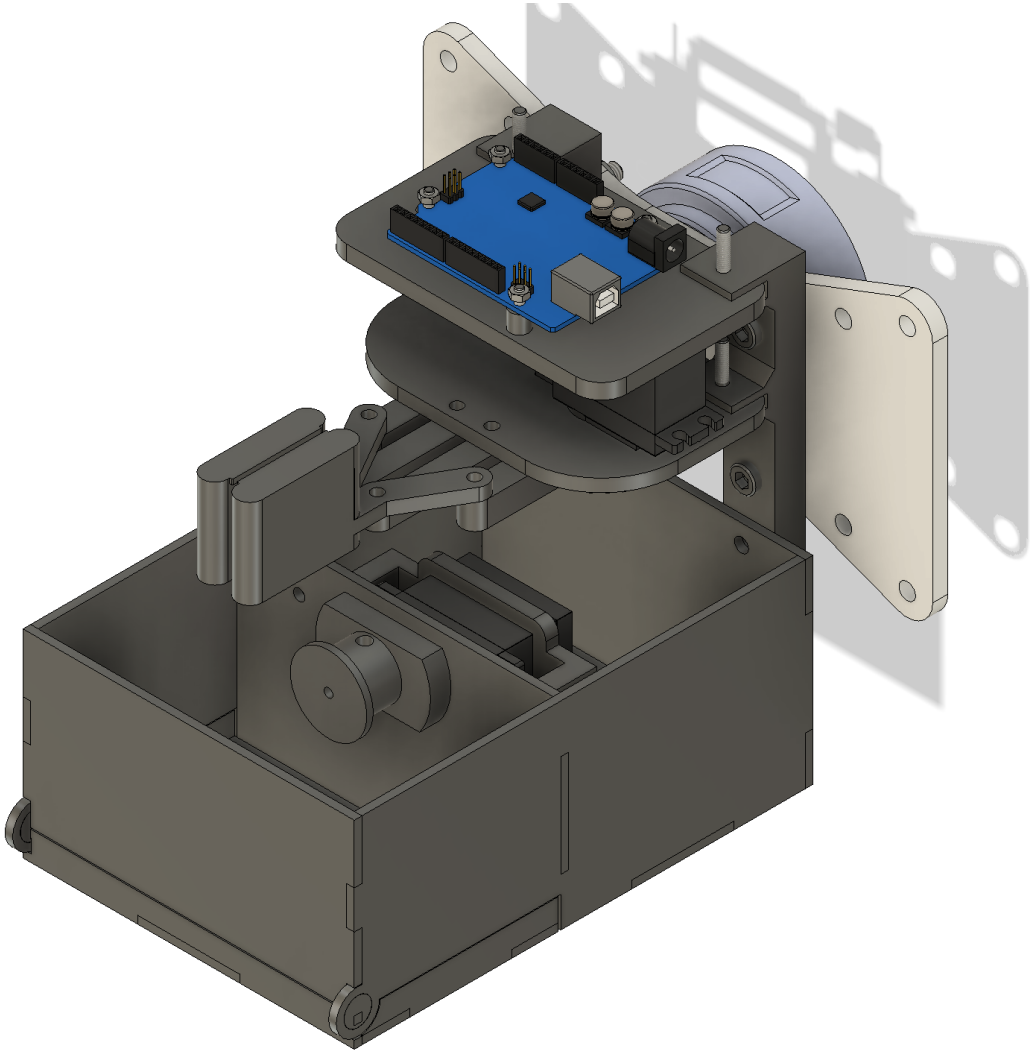

Figure 1: General mechanism and final project

1 Choice of mechanism

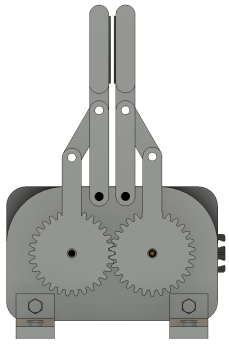

Figure 2: Mechanism

The gripper uses a parallel jaw mechanism powered by a compact servo motor. The servo motor actuates two gears, and the rotation of the gears is then converted into translational motion to the pliers via a linkage system. The chosen mechanism offers various benefits such as control, adaptability, ease of use, and is efficient in grasping raspberries of different sizes and shapes. Our system was designed to grip the raspberries from the side, as it is a common practice from a human perspective. As we are interested in picking up as many raspberries as possible in a given amount of time, the side grip feature seems to be more intuitive in terms of placement of the robot arm to pick up the berries during competition day. The following two sensors are then fixed onto the two pincers to collect the important data.

During our design process, we also chose to implement a storage box, as this would enable us to focus primarily on the gripping of the raspberries without having to worry about the back-and-forth motion to drop the berries in the indicated placement. The implementation of the storage box was synonymous with a huge gain of time and performance boost.
Finally, once gripped and detected ripe, the berries are picked by moving the robot arm downwards.

2 Choice of Sensor

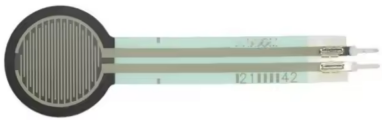

Figure 3: Pressure Sensor

For this project, we chose two sensors that are simple, functional, and sustainable. Initially, we used the FSR402 pressure sensor but later switched to a larger force-sensitive resistor with a bigger contact surface. This improved pressure distribution and accuracy, while still fitting seamlessly into the pincers. The sensor is highly sensitive, reliable, and easy to connect to the Arduino.

For the conductivity sensor, we first used 3D-printed plastic pincers with a thin copper layer. However, the pressure sensor didn't work well under the copper, and the pincers lacked grip. We switched to plastic pincers wrapped in stripped tin wires from old cables, improving sustainability and reliability. Thin sandpaper was added under the pincers to improve grip without affecting the pressure sensor. This cost-effective solution was simple and effective. Initially, we used mechanical switches to limit servo movement, but later, improved Arduino code allowed full software control, simplifying the system.

During testing, the pressure sensor worked flawlessly, handling raspberries gently without damage. The conductivity sensor, though reliable, took more time as it required closing the pincers to detect ripeness. In conclusion, our conductivity sensor was simple, sustainable, and reliable but not the fastest in a competitive setting.

3 Choice of material

Material selection for the project was based on four key criteria: resistance, cost, conductivity, and grip. To adhere to the project's budget cap, 3D printing technology was chosen as it offers a cost-effective manufacturing process. However, as the pliers were made from PETG, their contact surface was too smooth, causing issues with gripping the raspberry, which tended to slip in the vicinity of the pliers. To ensure adequate grip, sandpaper was adhered to the pliers. Additionally, to further minimize costs, some non-critical and 2d shaped components of the gripper were fabricated using laser-cut MDF wood plates. For the conductivity test, conductive filament was extracted from old cables, providing an economical solution.

4 Reflection on the design

The design of our gripper is intentionally simple, yet this simplicity does not compromise its performance. The chosen mechanism, featuring only two spur gears connected to the "hand" of the gripper, functioned perfectly. Initially, we encountered some challenges in grasping the fruit due to the hand's lack of grip. This issue was easily resolved by adding a small platform on top to assist in pressing the fruit downward and applying sandpaper to enhance grip.

The electrical system performed reliably. However, ensuring proper conductivity was challenging. If we were to redesign this aspect, we would consider integrating a color sensor, which could improve efficiency during the grasping process.

The tank design proved highly efficient and offered the advantage of reusability. If redesigned, we would modify the bottom of the tank to prevent fruit from becoming stuck due to their position after being picked. The tank was also designed with additional storage space for potential electrical components.

Overall, the gripper was compact and efficient. Nonetheless, as mentioned above, a few improvements could further enhance its speed and functionality.

5 Sustainability & Scalability

The primary sustainability challenges of the gripper are from the testing and material usage phases. A significant amount of material was wasted due to repeated 3D printing of parts that were either structurally inadequate or failed under fatigue. Therefore, using FEM simulations during the design would have reduced material wastage by predicting failure points. Additionally, redesigning parts to minimize material usage through topology optimization could result in smaller, lighter components, further enhancing sustainability. Another issue is the use of non-recyclable glue for assembling the reservoir. Substituting this with an eco-friendly adhesive or eliminating glue by improving laser-cut tolerances could allow for secure assembly through friction fits or mechanical fasteners, reducing ecological impact.

When scaling up production, changes would focus on improving manufacturing efficiency without compromising sustainability. While laser cutting for 2D components remains optimal due to its speed and precision, 3D printing, is not optimal due to its slower production rate. Transitioning to injection molding for plastic components would significantly increase production speed. However, thermoplastics, rather than thermosets, should enable recycling at the end of the product's lifecycle. This adjustment would balance speed and sustainability. Automation in the assembly process could be explored to improve efficiency further and reduce environmental impact.

6 Literature/Patent Search

In this research, we expanded our focus to include grippers designed for various fruit harvesting, not just raspberries, with an emphasis on gripper design and functionality, excluding robot mobility or navigation.

1) "A raspberry picked by a robot opens the door to harvesting automation" (Le Monde, 2019). This article describes a four-pincer gripper that distributes pressure evenly to minimize fruit damage. In contrast, our gripper uses two automated pincers with a pressure sensor, achieving similar delicacy while optimizing cable management.

Figure 4: Gripper design.

2) "Robotic Gripper's Soft Touch Promises Gentler Blackberry Harvest Automation" (ASME, 2020) This gripper relies on soft materials for gentle handling, while ours actively adjusts force through a pressure sensor and uses a conductivity sensor for ripeness detection. Our approach ensures adaptability and precision, surpassing their material-driven softness.

3) "Strawberry-picking robot could harvest enough fruit for Wimbledon" (The Engineer, 2018) Their multi-arm gripper system enables high-speed harvesting, whereas our two-pincer design, though less compact, is efficient with servo motors and optimized cable management. Additionally, we incorporate a practical fruit reservoir, absent in their system.
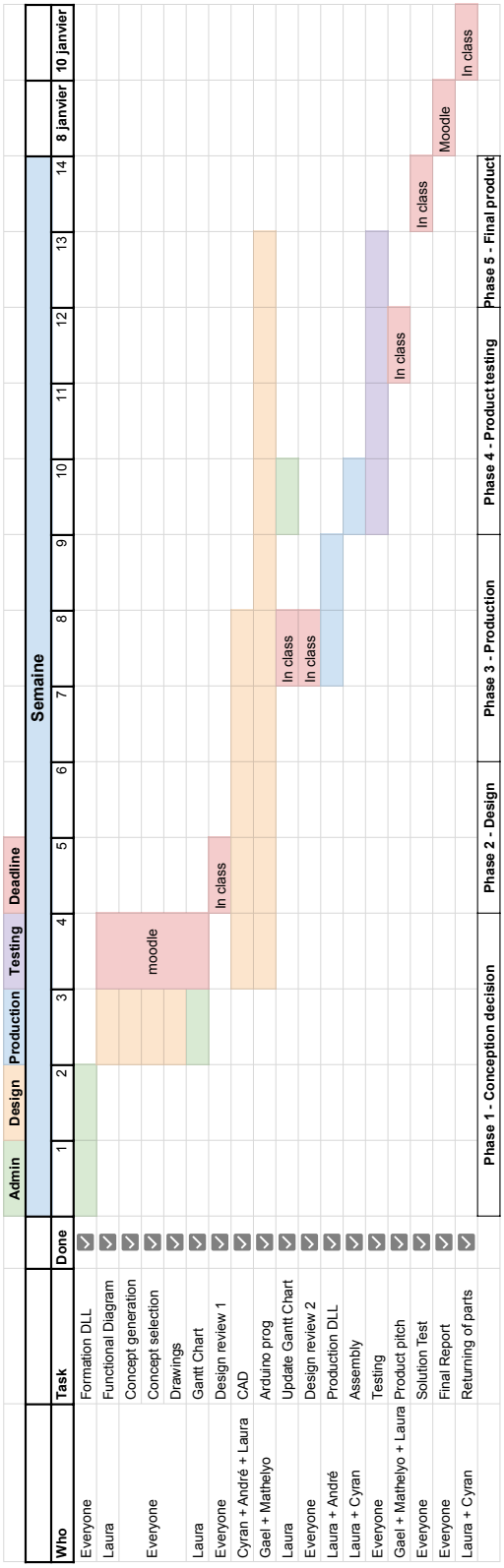
Annex 1 - Gantt Chart