Ecole Polytechnique
Fédérale de Lausanne

Project ME-320

# Assessment 1: Functionality diagram, concept selection and Gantt chart

Groupe 27:
Cyran Kühni
André Cruz
Laura Cheng
Gaël Vignau
Mathelyo Favre-reguillon

Professor:
Josie hughes

March 31, 2026

# Contents


**1 Reference Gripper** **1**

**2 Functionality diagram** **2**

**3 Concept design** **3**
- 3.1 Design A . . . 3
- 3.2 Design B . . . 4
- 3.3 Design C . . . 5
- 3.4 Design D . . . 6
- 3.5 Design E . . . 7

**4 Concept selection** **8**
- 4.1 Concept Screening . . . 8
- 4.2 Concept Scoring . . . 9

**5 Gantt chart** **10**


# 1 Reference Gripper

The images below showcases our reference gripper, which is widely used in the industry due to its simple and efficient design, often regarded as an industry standard. This type of design has proven to be effective across numerous industrial applications, offering a balance of ease of use, durability, and efficiency. To respond to all following criteria, we choose to consider that this reference has a colour sensor in front, far from the fruit to recognize if it is ripe or unripe. From now on, we should consider whether it is possible to develop a gripper that surpasses this model in terms of performance, functionality, or adaptability. If a complete redesign is not achievable, we can focus on making targeted improvements to optimize the current tool, such as enhancing its materials, mechanics, or ergonomics. This approach then paves the way for innovation and ongoing progress in the tools used within industrial environments.

(a) Open gripper configuration (b) Closed gripper configuration

Figure 1: Reference Gripper Design

## 2 Functionality diagram

The functionality diagram provides an overview of the system we are working with. It highlights the primary objectives, which are broken down into a series of smaller, interconnected tasks.

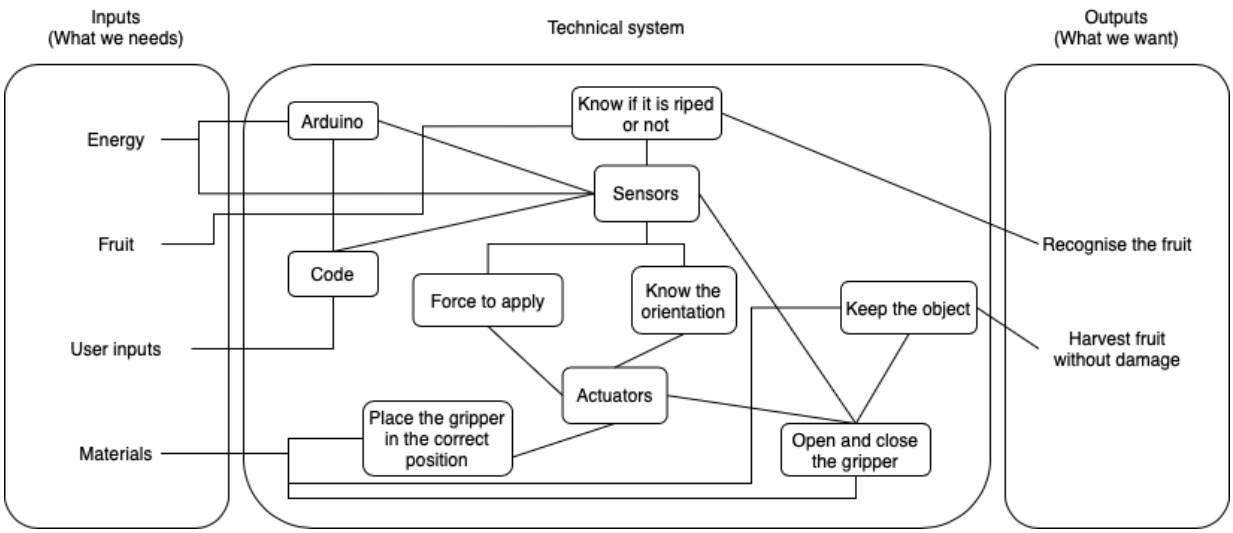


- **Arduino**: The controller of the system, managing the sensors, actuators, and executing the code logic.
- **Code**: Provides the logic that governs how the system should respond to inputs. It determines:
  - **Force to apply**: Ensures appropriate pressure is applied during harvesting to avoid damaging the fruit.
  - **Placing the gripper in the correct position**: Aligns the gripper accurately based on sensor inputs.
- **Sensors**: These collect data from the environment and the fruit, such as:
  - **Know if it is ripe or not**: Determines whether the fruit is ready for harvest.
  - **Know the orientation**: Helps identify the position of the fruit for proper gripping.
- **Actuators**: Responsible for executing physical actions in the system, including:
  - **Force to apply**: Ensures the right amount of force is applied to grip the fruit without causing damage.
  - **Open and close the gripper**: Controls the gripping mechanism to securely hold and release the fruit.
  - **Keep the object**: Ensures the fruit remains securely gripped.

The functional flows are

- **Energy Flow**: Powers the system components (sensors, actuators, Arduino).
- **Information Flow**: Includes signals from sensors (such as ripeness and orientation) and user inputs (commands).
- **Material Flow**: Refers to the physical interaction with the fruit (gripping, moving, and harvesting it).

By combining these flows and operations, the system transforms the inputs (energy, commands, materials, and fruit) into the desired output (fruit harvested without damage).

# 3 Concept design

## 3.1 Design A

This design concept for a raspberry-picking gripper is based on a mechanism resembling tendons, with four pincers connected by strings that transmit force. The goal of this was to be close to the hand movement of a human, which regroups all the selection criteria. The pincers are tightened two by two using gears that pull on the strings, enabling a gentle grip on the fruit. One of the pincers is equipped with a color sensor to detect the ripeness of the raspberry and determine if it's ready for harvesting. However, this design faces a significant challenge: the precision of the force applied to the raspberry. Due to the fruit's delicate nature, improper control of the force transmitted through the strings to the pincers could easily damage or crush the raspberry. Ensuring precise force regulation, balancing firmness with delicacy, is a critical issue that must be addressed to make the device effective without compromising the fruit's integrity.

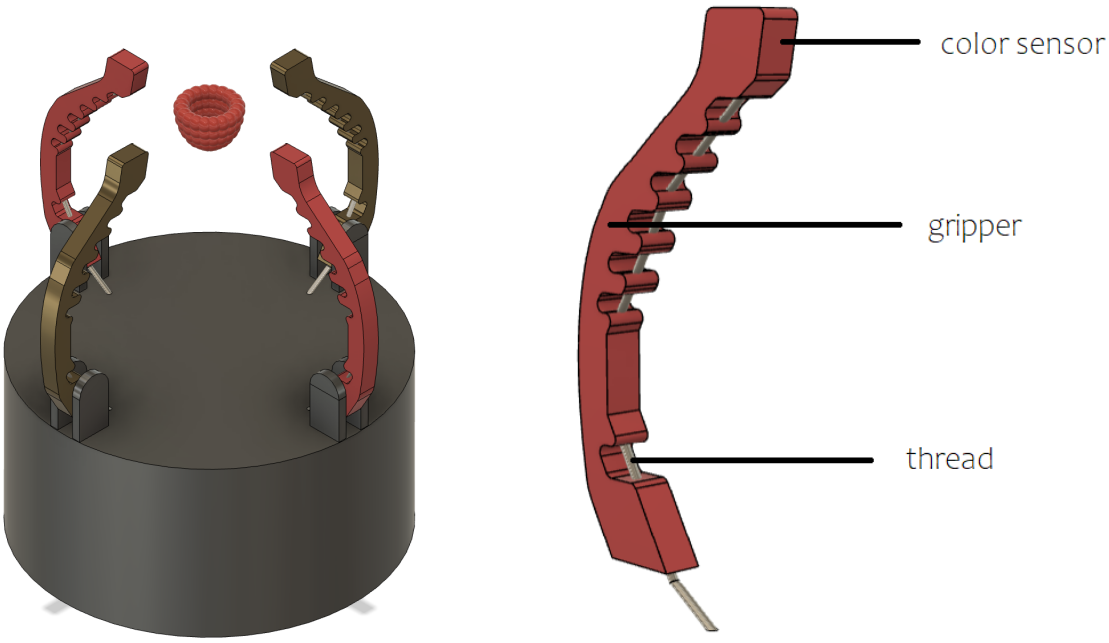


(a) Isometric view

(b) Focus on the gripper

Figure 2: Design A (FAVRE-REGUILLON Mathélyo)

In this design, the precise control of the pressure applied to the raspberries remains a significant challenge. The mobility of the "fingers" and the dynamics of the tendons introduce variables that are difficult to manage. Even with the integration of a pressure sensor to adjust the force in real time, the complexity of coordinating the tension in the strings with the movement of the pincers makes regulating the pressure tricky. Any imbalance in this interaction could result in either excessive or insufficient force on the fruit. Maximizing control during the gripping process, without compromising the delicate touch required to handle raspberries, will be a critical point to refine for ensuring the device's reliability.

## 3.2 Design B

This design concept for a raspberry-picking gripper is based on a rack and pinion system. The goal of this concept is to pick up the raspberry by rotating the pinion which will lead to both racks moving. The rack is rigidly fixed to the arm of the gripper. To be sure that one arm isn't too heavy for the system, we've decided to implement four (two on each side) supports that will support the arm during the translation movement. The two racks are fixed with four M4 screws, allowing the rack to move freely, thanks to an oblong hole, in one direction.

At the center of the main structure we have the color sensor (in blue) that will detect if the fruit is ripe or not. This position is strategically adequate because of the small distance between the sensor and the fruit, which will help the sensor for a better detection. Because of the fragility of the raspberry, a force detection sensor will be implemented at the tip the arms to ensure the good shape of the fruit after picking it up.

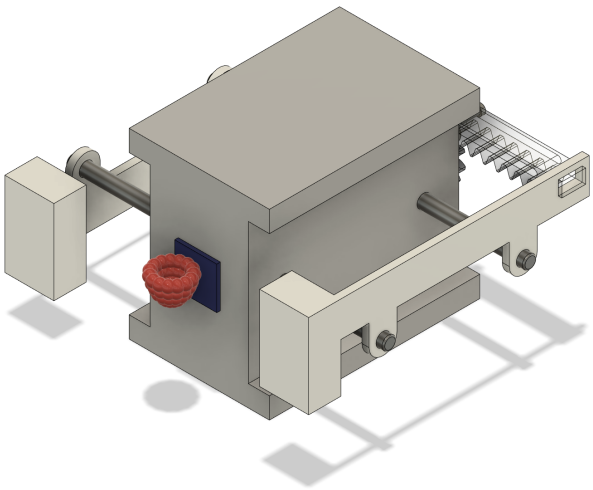

(a) Isometric view

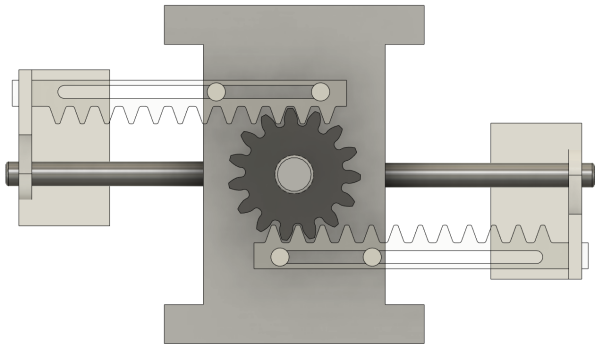

(b) Back view

Figure 3: Design B (KUHNI Cyran)

It is important to precise that the position and the way to fix the actuator and the Arduino still need to be discuss to find the more efficient way of packaging our system. To conclude, implementing a storage system for the fruits could be beneficial, as it would save time during the harvesting process.

### 3.3 Design C

The images below show a conceptual design of a raspberry-picking gripper. This concept of the gripper is based on a gear-driven mechanism that transforms the rotational motion of the actuators into the translation motion of the gripper fingers. The gripper consists of two fingers mounted onto a casing that bears the mentioned mechanism.

The gripper fingers are actuated by a set of interlocking gears. On each gear, you can find a pin. These pins as well as the sliding pins further forward will be responsible for the opening and closing motion of the fingers. The rotating pin and the sliding pin are constrained to move within the oblong hole of the finger gripper ensuring the opening and closing motion of both. To ensure the ability to pick up all the possible shapes of raspberry, we will design the gripper to have its most closed position in order to pick up the smallest possible raspberry. To ensure that we do not apply too much pressure on the raspberry, we will implement pressure sensors on both gripping surfaces. To enable detection of ripe and unripe raspberries, a color sensor we be implemented in the center of the casing device.

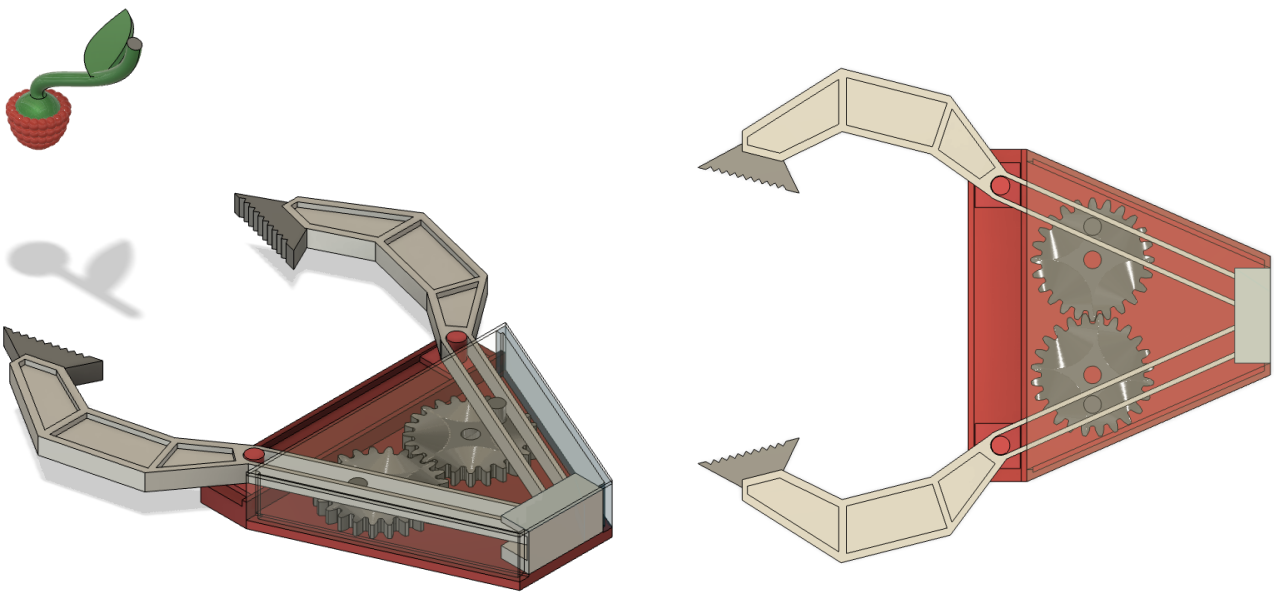

(a) Isometric view (b) Top view

Figure 4: Design C (CRUZ FARIA André)

However, we will have to consider that while closing, the gripper tips will also have a motion towards the raspberry. To avoid that the gripper misses the raspberry, some calculations will have to be done to ensure a good gripping rate. Furthermore, we will have to reflect on where to implement the actuator and the Arduino if this concept is chosen for further development.

## 3.4 Design D

This fourth design of the raspberry gripper is designed with three fingers. This ensures stability and precision when the fruit is held in the middle.

Each of the three fingers is equipped with a pressure sensor at its tip, which allows the system to detect and regulate the amount of force applied to the fruit. The gripper also features a color sensor positioned centrally between the three fingers. This sensor determines the ripeness of the fruit.

Each finger of the gripper is controlled by its own actuator, resulting in a total of three actuators, one per finger. These actuators provide the necessary movement to open and close the fingers with the help of a worm gear system, as well as to adjust the grip force based on the feedback from the pressure sensors. The actuators work in coordination with the sensory data to precisely control the gripper's interactions with the raspberry, ensuring minimal damage and optimal handling.

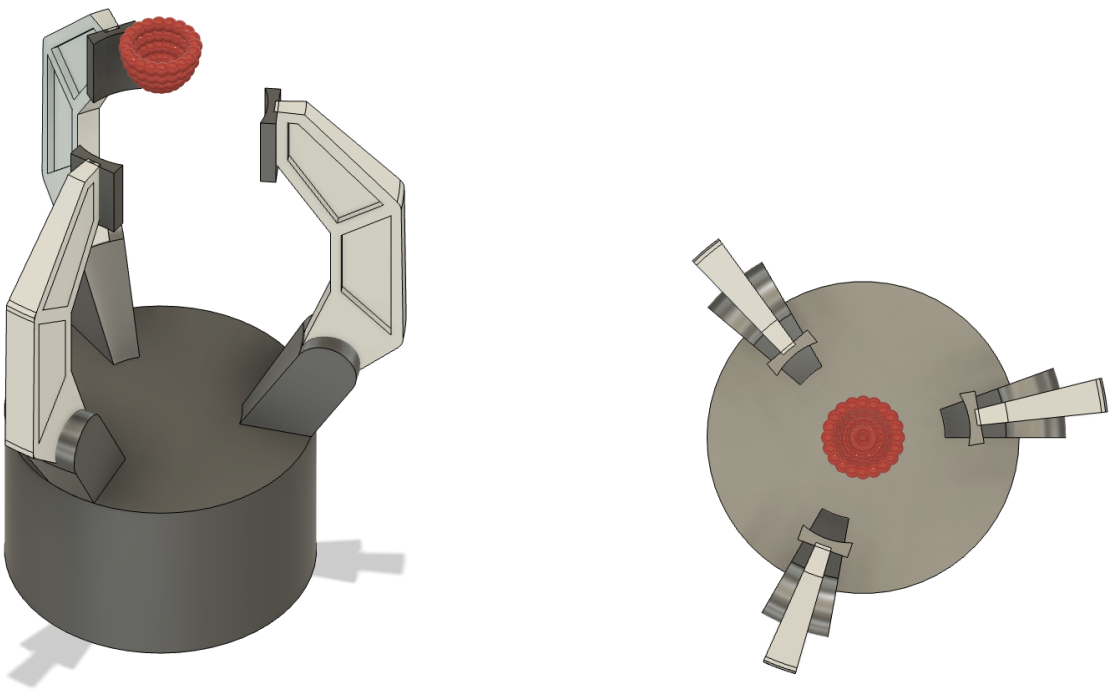

(a) Isometric view (b) Top view

Figure 5: Design D (CHENG Laura)

### 3.5 Design E

This last design of the raspberry gripper present a two fingers solution. While ensuring an overall good control and precision, the little tank situated just underneath the fingers allow the mechanism to pick and store all the raspberry, avoiding multiples back and forth motion to drop the fruits one by one.

The tips of the two fingers are equipped with pressure sensors, allowing the system to monitor and control the force exerted on the fruit. In addition, a color sensor is placed on the red ring and orientated to evaluate the fruit's ripeness.

The gripper uses a separate actuator to control the two fingers, with one actuator dedicated to each finger. These actuators are responsible for the opening and closing of the fingers, using a rack and pinion system to move them along a rail, and for regulating the grip force based on real-time feedback from the pressure sensors. By working in unison with the sensor data, the actuators ensure careful manipulation of the raspberry, reducing the risk of damage and improving handling precision. Finally, the trapdoor located at the bottom of the tank is controlled by its own actuator in order to discharged the fruits when wanted, and resulting in a 3 actuator mechanism.

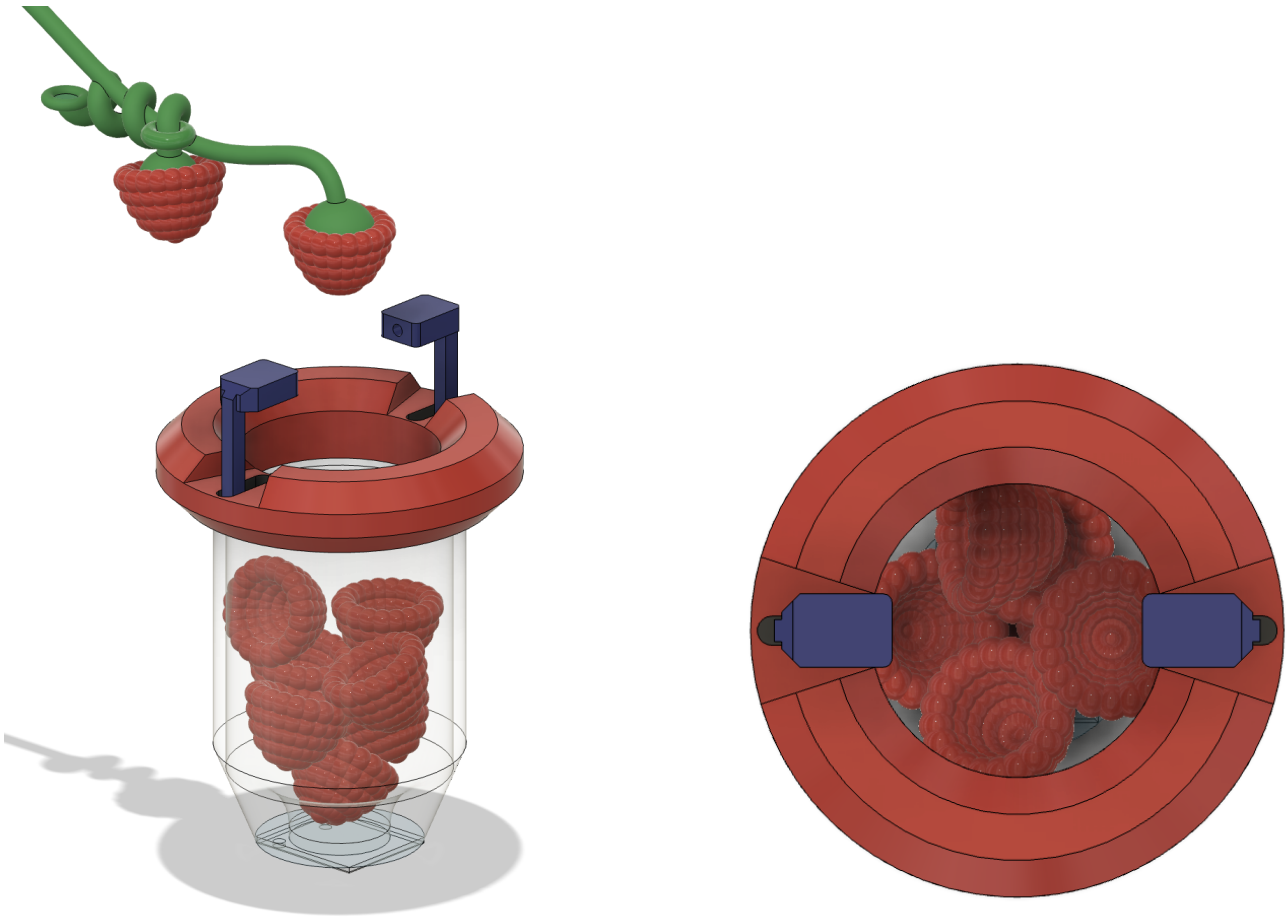

(a) Isometric view (b) Top view

Figure 6: Design E (VIGNAU Gaël)

# 4 Concept selection

The design selection criteria for a robotic gripper system aimed at harvesting raspberries must account for several factors specific to handling delicate fruits such as:

| Criteria | Metric or Value | Associated Technology |
|---|---|---|
| - Gripper grip | None | Material with grip |
| - Reliable identification of the fruit | Ripe/unripe | Conductivity sensors |
| - Size of fruit | 10 mm $<$ Size $<$ 30 mm | Adjustable gripper |
| - Controlled and adjustable force | No damage | Pressure sensor |
| - Simple fruit clamping mechanism | $\leq$ 2 degrees of freedom | Few degrees of freedom |
| - Compact size of the gripper | Max 20cm x 20cm x 20cm | Lightweight design |
| - Quick mounting on a UR robot | 1 minute max | Simple mounting interface |
| - Speed and precision in harvesting | 5 min for maximum of fruits | Synchronized control |
| - Fruit storage capacity | Capacity for 10 fruits | Reservoir |

Table 1: Design criteria, metrics, and associated technologies for robotic gripper system

With these criteria, five different design concepts were conceptualized, each offering a unique approach to addressing these challenges. The designs vary in terms of gripping mechanisms, materials, degrees of freedom, and overall structure, aiming to balance efficiency, precision, and ease of integration into existing robotic systems.

## 4.1 Concept Screening

To move forward in the design process, we now turn to a selection matrix. This matrix systematically compares each of the five design concepts against the established criteria, evaluating their strengths and weaknesses. By scoring each design according to how well it meets the required specifications, we can determine the most suitable option for further refinement and potential prototyping. The table below summarizes this selection process.

Each design is assessed based on whether it matches, lacks, or exceeds the characteristics found in the reference model, in the introduction. If a particular characteristic is present in both the design and the reference model, it is marked with a "0". If the design lacks a characteristic that is present in the reference model, it is marked with a "-". Conversely, if a characteristic is found in the design but not in the reference model, it is marked with a "+".

| | DESIGN VARIANTS | | | | | |
|---|---|---|---|---|---|---|
| **Selection criteria** | **A** | **B** | **C** | **D** | **E** | **REF** |
| Detection precision | 0 | + | - | 0 | 0 | 0 |
| Gentleness in Handling | - | - | + | + | 0 | 0 |
| System compactness | - | + | + | - | - | 0 |
| Ease of Assembly and Mounting | + | 0 | + | 0 | - | 0 |
| Operational Efficiency | - | + | 0 | - | + | 0 |
| Adhesion to fruit | 0 | - | + | + | 0 | 0 |
| Adaptability to fruit's size | + | + | + | + | + | 0 |
| Simple clamping mechanism | - | + | + | 0 | 0 | 0 |
| Fruit storage | 0 | 0 | - | - | + | 0 |
| PLUS | 2 | 5 | 6 | 3 | 3 | |
| SAMES | 3 | 2 | 1 | 3 | 4 | |
| MINUSES | 4 | 2 | 2 | 3 | 2 | |
| **NET** | -2 | 3 | 4 | 0 | 1 | |
| **RANK** | 5 | 2 | 1 | 4 | 3 | |
| **CONTINUE?** | NO | YES | YES | YES | YES | |

Table 2: Design selection

## 4.2 Concept Scoring

The concept scoring evaluates the remaining design based on the criteria that were assigned specific weights according to their importance in the final model. For each design, a rating is given compared to reference (1: much worse, 2: worse, 3: same, 4: better, 5: much better). These ratings are then multiplied by the corresponding weight of each criterion to calculate the relative score.

| | | CONCEPTS | | | | | | | |
|---|---|---|---|---|---|---|---|---|---|
| | | **B** | | **C** | | D | | E | |
| Selection criteria | Weight | Rate | Score | Rate | Score | Rate | Score | Rate | Score |
| Detection precision | 10% | 4 | 0.3 | 2 | 0.2 | 3 | 0.3 | 3 | 0.3 |
| Gentleness in Handling | 15% | 2 | 0.3 | 3 | 0.45 | 4 | 0.6 | 3 | 0.45 |
| System compactness | 10% | 4 | 0.4 | 5 | 0.5 | 1 | 0.1 | 2 | 0.2 |
| Ease of Assembly | 10% | 3 | 0.3 | 4 | 0.4 | 3 | 0.3 | 2 | 0.2 |
| Operational Efficiency | 20% | 4 | 0.8 | 3 | 0.6 | 2 | 0.4 | 4 | 0.8 |
| Adhesion to fruit | 10% | 2 | 0.2 | 4 | 0.4 | 4 | 0.4 | 3 | 0.3 |
| Adaptable to fruit's size | 10% | 4 | 0.4 | 4 | 0.4 | 4 | 0.4 | 4 | 0.4 |
| Clamping mechanism | 10% | 4 | 0.4 | 4 | 0.4 | 3 | 0.3 | 3 | 0.3 |
| Fruit storage | 5% | 3 | 0.15 | 1 | 0.05 | 2 | 0.1 | 5 | 0.25 |
| TOTAL SCORE | | 3.25 | | 3.4 | | 2.9 | | 3.2 | |
| RANK | | 2 | | 1 | | 4 | | 3 | |
| **CONTINUE?** | | overall | | grip | | NO | | tank | |

Table 3: Design scoring

The total score for each design is determined by summing up all the relative scores across the criteria. This final total score allows for a clear ranking of the designs, highlighting which concept best meets the desired specifications. **IMPORTANT:** from the scoring, we can conclude that our design will combine **B** (overall design), **C** (grip material), and **E** (tank) concept regarding few criteria.

# 5 Gantt chart

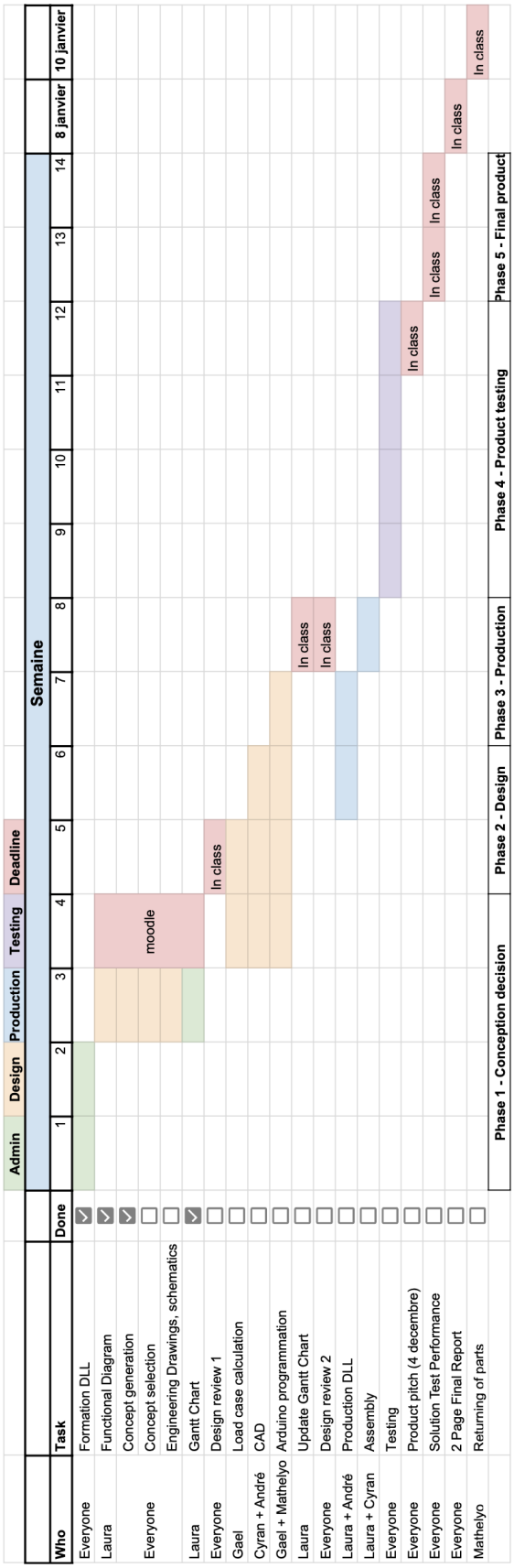


Figure 7: Gantt chart