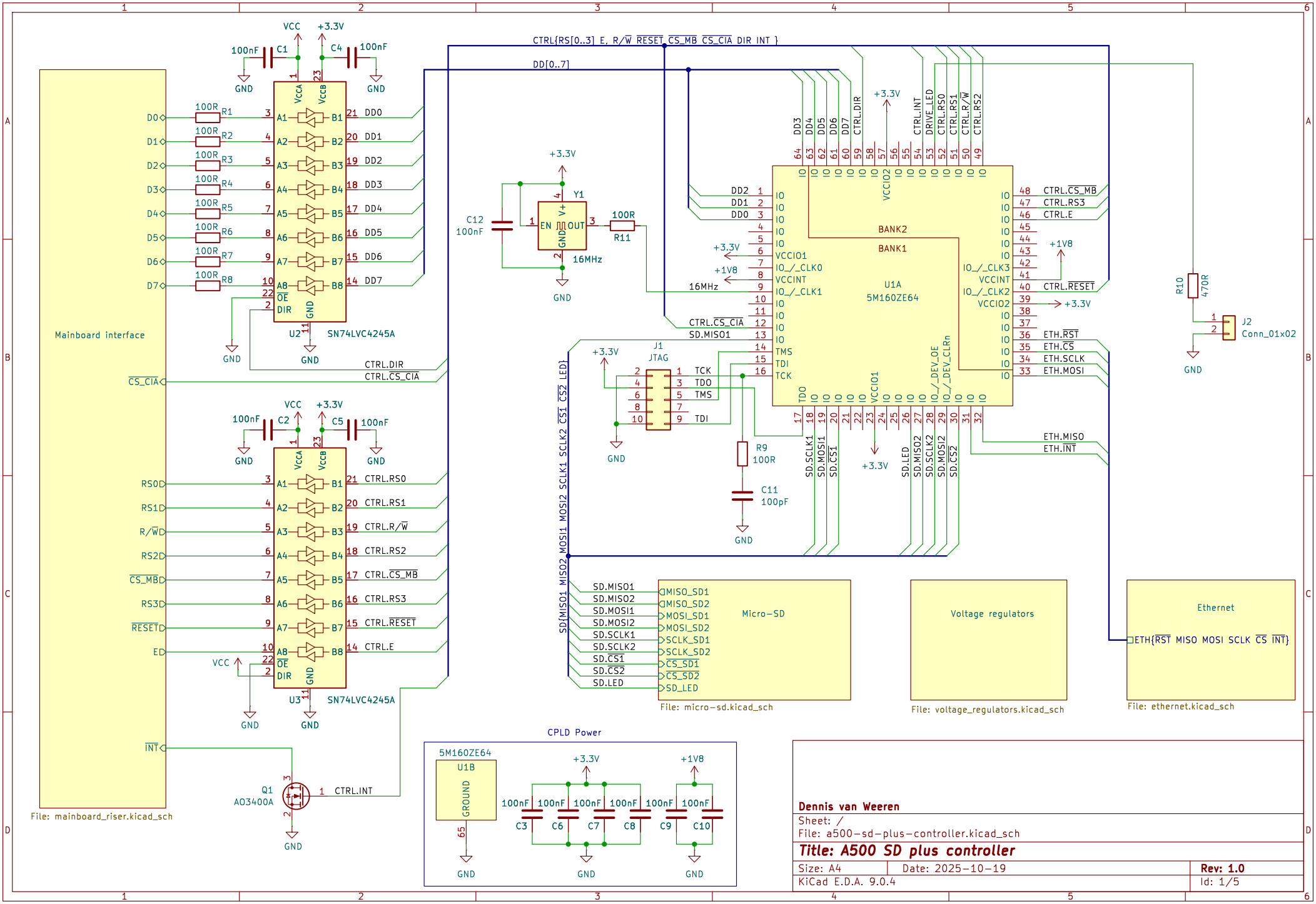

Mainboard interface
File: mainboard_riser.kicad_sch
SN74LVC4245A
U2
U3
Q1
AO3400A
CTRL{RS[0..3] E, R/W RESET CS_MB CS_CIA DIR INT }
DD[0..7]
Y1
16MHz
U1A
5M160ZE64
BANK1
BANK2
J1
JTAG
J2
Conn_01x02
Micro-SD
File: micro-sd.kicad_sch
Voltage regulators
File: voltage_regulators.kicad_sch
Ethernet
File: ethernet.kicad_sch
CPLD Power
5M160ZE64
U1B
GROUND
Dennis van Weeren
Sheet: /
File: a500-sd-plus-controller.kicad_sch
Title: A500 SD plus controller
Size: A4
Date: 2025-10-19
Rev: 1.0
KiCad E.D.A. 9.0.4
Id: 1/5

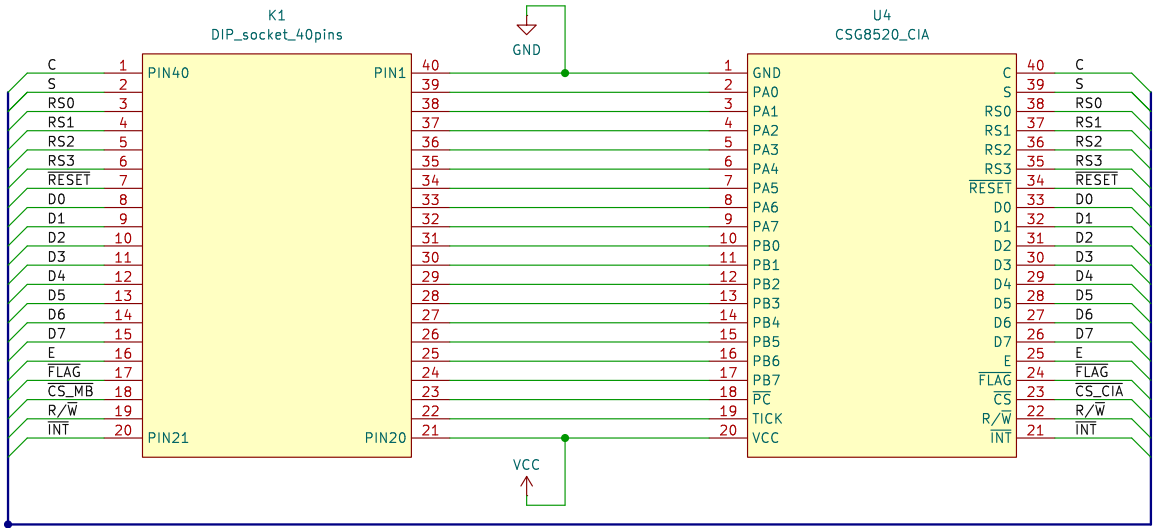

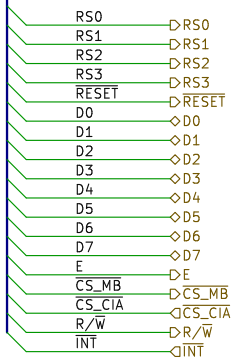

Dennis van Weeren

Sheet: /Mainboard interface/

File: mainboard_riser.kicad_sch

Title: A500 SD plus controller

Size: A4	Date: 2025-10-19	**Rev: 1.0**
KiCad E.D.A. 9.0.4		Id: 2/5

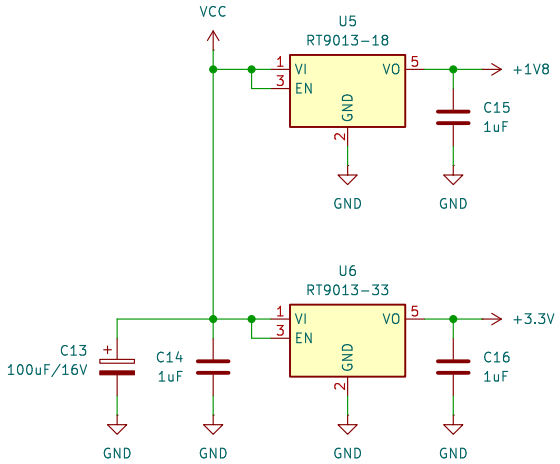

Dennis van Weeren		
Sheet: /Voltage regulators/ File: voltage_regulators.kicad_sch		
Title: A500 SD plus controller		
Size: A4	Date: 2025-10-19	**Rev: 1.0**
KiCad E.D.A. 9.0.4		Id: 3/5

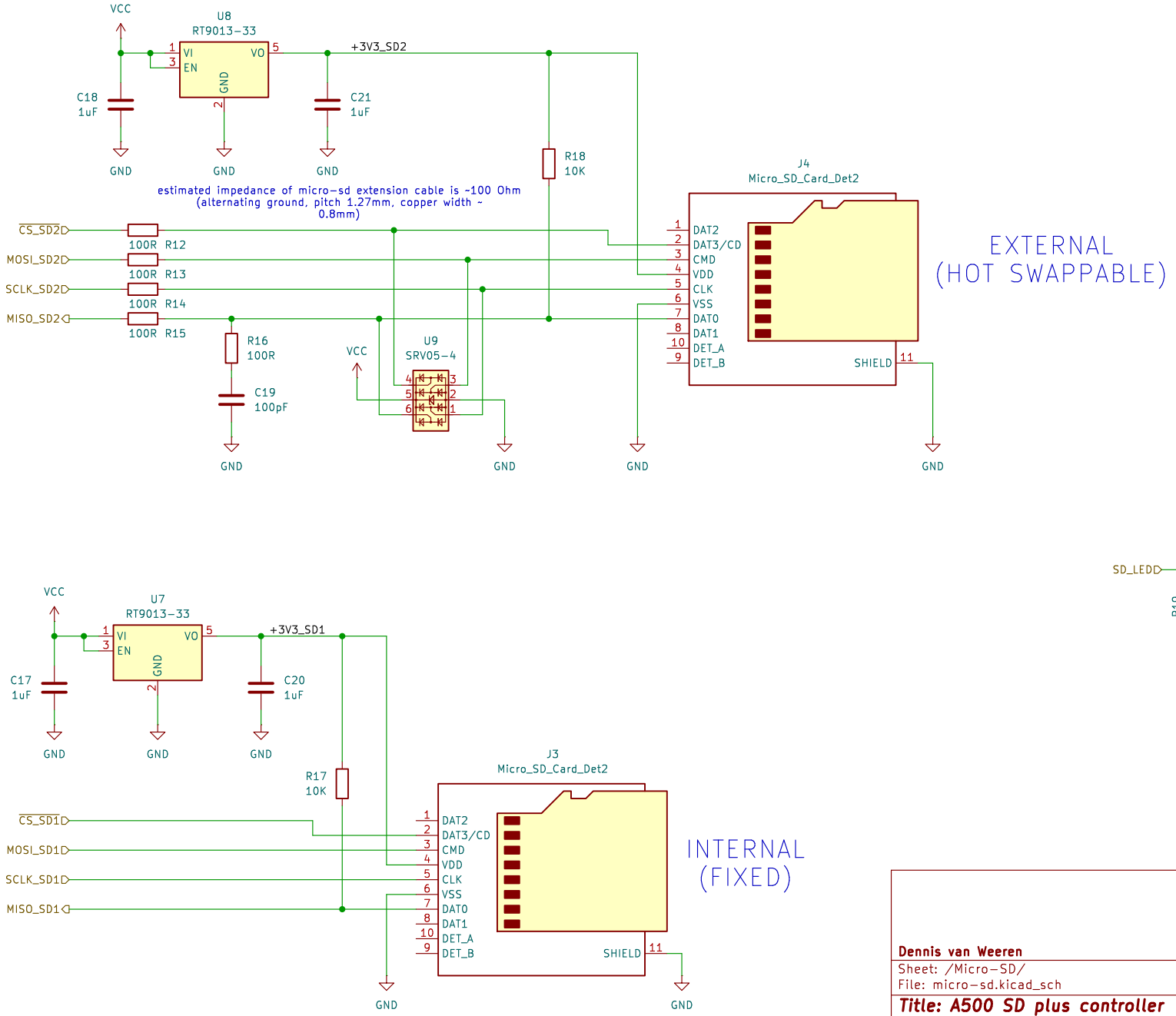

Dennis van Weeren		
Sheet: /Micro-SD/		
File: micro-sd.kicad_sch		
Title: A500 SD plus controller		
Size: A4	Date: 2025-10-19	**Rev: 1.0**
KiCad E.D.A. 9.0.4		Id: 4/5

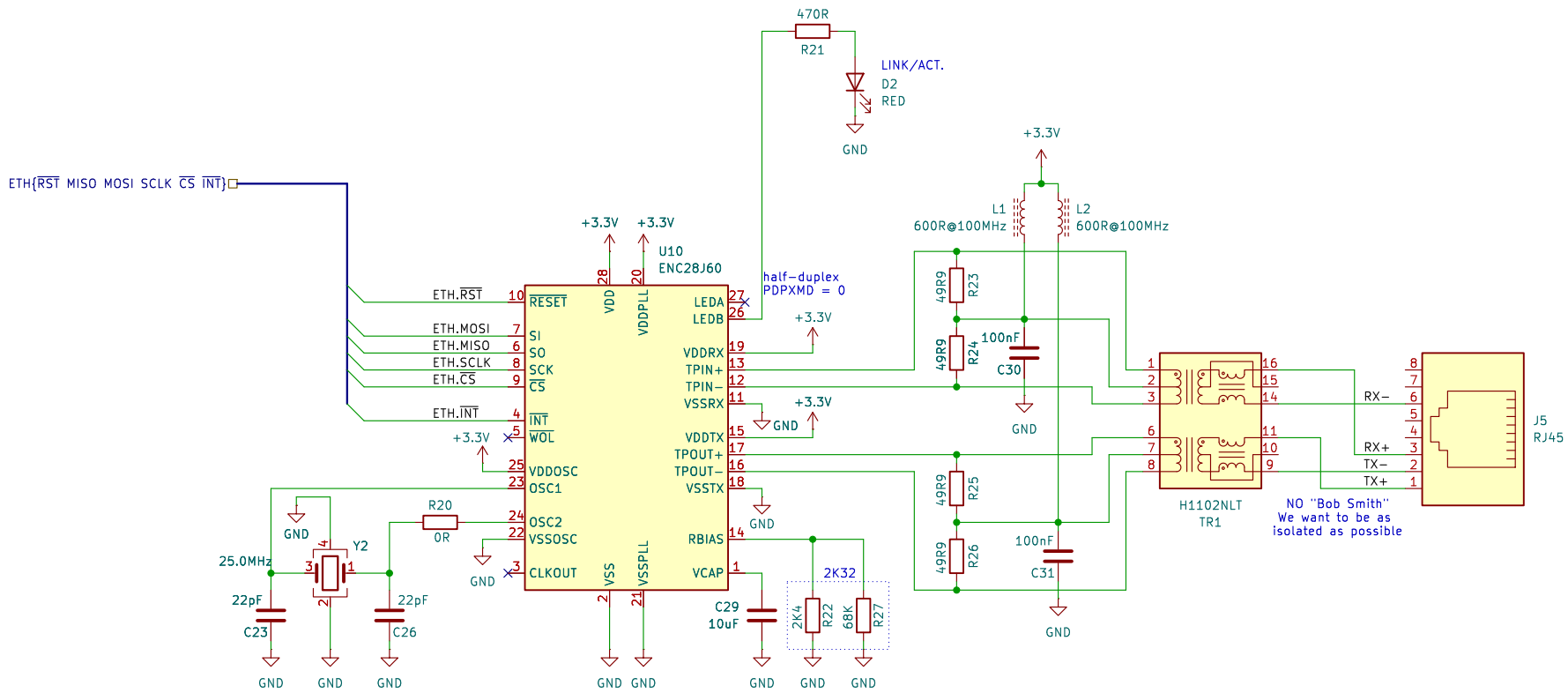

Dennis van Weeren		
Sheet: /Ethernet/		
File: ethernet.kicad_sch		
Title: A500 SD plus controller		
Size: A4	Date: 2025-10-19	**Rev: 1.0**
KiCad E.D.A. 9.0.4		Id: 5/5