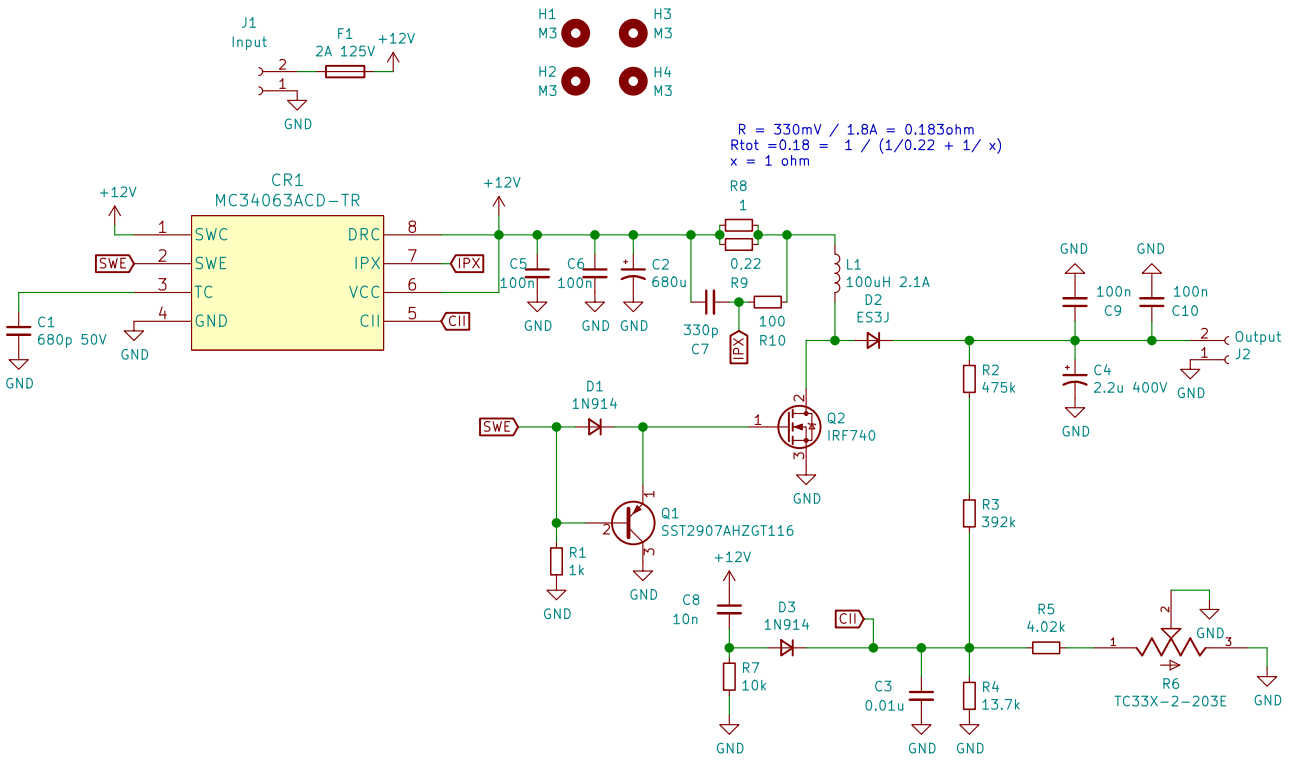

https://github.com/MathieuBahin/HVPowerSupply

Mathieu BAHIN

Sheet: /

File: HVPowerSupply.sch

Title: HV Power Supply MC34063

Size: A4	Date: 2022-04-01	**Rev: 0**
KiCad E.D.A. kicad (5.1.8)-1		Id: 1/1