1

FLUIDS AND THEIR PROPERTIES

Course Contents

1.1 Introduction

1.2 Properties of fluid

1.3 Viscosity and Newton's law of viscosity

1.4 Variation of viscosity with temperature

1.5 Types of fluid

1.6 Surface tension

1.7 Capillarity

1.8 Vapor pressure and cavitation

1.9 Compressibility and Bulk modulus

1.10 Hypothesis of continuum

1.11 List of formulas

1.12 Solved Numericals

1.1 Introduction

- Fluid mechanics is a branch of engineering science which deals with the behavior of fluids (liquid or gases) at rest as well as in motion.

1.2 Properties of Fluids

- **Density or Mass Density**

- Density or mass density of fluid is defined as the ratio of the mass of the fluid to its volume.
- Mass per unit volume of a fluid is called density.
- It is denoted by the symbol **'ρ' (rho).**
- The unit of mass density is kg per cubic meter i.e. kg/m^3.
- Mathematically,

$$\rho = \frac{\text{Mass of fluid}}{\text{Volume of fluid}}$$

- The value of density of water is 1000 kg/m^3.

- **Specific Weight or Weight Density**

- Specific weight or weight density of a fluid is defined as the ratio of weight of a fluid to its volume.
- Thus weight per unit volume of a fluid is called weight density.
- It is denoted by the symbol 'w'.
- Mathematically,

$$w = \frac{\text{Weight of fluid}}{\text{Volume of fluid}}$$

$$= \frac{(\text{Mass of fluid}) \times (\text{Acceleration due to gravity})}{\text{Volume of fluid}}$$

$$= \frac{(\text{Mass of fluid}) \times g}{\text{Volume of fluid}}$$

$$= \rho \times g$$

$$\boxed{w = \rho g}$$

- The value of specific weight of water is 9.81 X 1000 N/m^3 in SI unit.

- **Specific Volume**

- Specific volume of a fluid is defined as the volume of a fluid occupied by a unit mass of fluid.
- Thus specific volume is volume per unit mass of fluid.
- It is expressed as m^3/kg.

– Mathematically,

$$\text{Specific volume} = \frac{\text{Volume of fluid}}{\text{Mass of fluid}}$$

$$= \frac{1}{\dfrac{\text{Mass of fluid}}{\text{Volume of fluid}}}$$

$$= \frac{1}{\rho}$$

– Thus specific volume is the reciprocal of mass density.

- **Specific Gravity or Relative Density**

– Specific gravity is define as the ratio of the density (or weight density) of a fluid to the density (or weight density) of a standard fluid.
– For liquids, standard fluid is taken water and for gases, standard fluid is taken air.
– Specific gravity is also called relative density.
– It is dimensionless quantity and is denoted by symbol S.
– Mathematically,

$$S(\text{for liquid}) = \frac{\text{Weight density (Density) of liquid}}{\text{Weight density (Density) of water}}$$

$$S(\text{for gases}) = \frac{\text{Weight density (Density) of gas}}{\text{Weight density (Density) of air}}$$

– Specific gravity of mercury is 13.6.

1.3 Viscosity

– Viscosity is defined as the property of fluid which offers resistance to the movement of one layer of fluid over another adjacent layer of fluid.
– When two layers of a fluid distance 'dy' apart, move one over the another at different velocities, say u and u + du as shown in fig., the viscosity together with relative velocity causes a shear stress acting between the fluid layers.

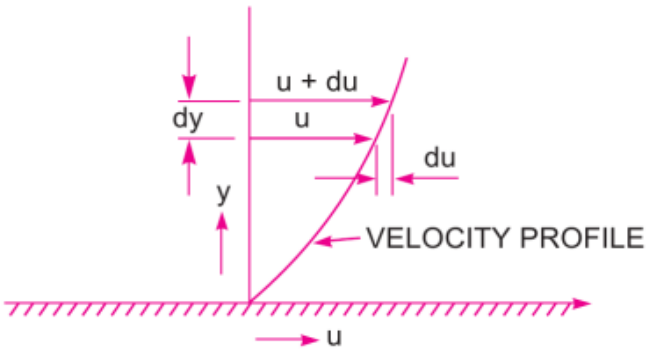

Fig.1.1 Velocity variation near a solid boundary

- The top layer causes a shear stress on the adjacent lower layer while the lower layer causes shear stress on the adjacent top layer.
- This shear stress is proportional to the rate of change of velocity with respect to y.
- It is denoted by symbol τ (Tau).

$$\tau \propto \frac{du}{dy}$$

$$\therefore \tau = \mu \frac{du}{dy}$$

- Where μ (called mu) is the constant of proportionality and is known as the co-efficient of dynamic viscosity or only viscosity.
- $\frac{du}{dy}$ represents the rate of shear strain or rate of shear deformation or velocity gradient.

$$\mu = \frac{\tau}{\left(\frac{du}{dy}\right)}$$

- Viscosity is also defined as the shear stress required to produce unit rate of shear strain.

Unit:

$$\therefore \ \mu = \frac{\text{Shear stress}}{\frac{\text{Change of velocity}}{\text{Change of distance}}}$$

$$= \frac{\text{Force}/\text{Area}}{\frac{\text{Length}}{\text{Time}} \times \frac{1}{\text{Length}}}$$

$$= \frac{\text{Force} \times \text{Time}}{(\text{Length})^2}$$

- **In SI system,** Unit of viscosity is $\frac{N \bullet s}{m^2} = pa \bullet s$
- **In MKS system,** Unit of viscosity is $\frac{kgf \bullet sec}{m^2}$
- **In CGS system,** Unit of viscosity is $\frac{dyne \bullet sec}{cm^2}$ (or Poise)

Note: $\boxed{1 \text{ Poise } = \frac{1}{10} \frac{N \bullet s}{m^2}}$

- **Newton's Law of Viscosity**

– Its states that the shear stress (τ) on a fluid element layer is directly proportional to the rate of shear strain.
– The constant of proportionality is called the co-efficient of viscosity.
– Mathematically,

$$\boxed{\tau = \mu \frac{du}{dy}}$$

1.4 Variation of Viscosity with Temperature

– The viscosity of fluid is due to two contributing factors, namely

1) Cohesion between the fluid molecules
2) Transfer of momentum between the molecules

– In the case of gases the interspace between the molecules is larger and so the intermolecular cohesion is negligible. However in the case of liquids the molecules are very close to each other and accordingly a large cohesion exists. Hence in liquids, the viscosity is mainly due to molecular momentum transfer.
– The intermolecular cohesive force decreases with rise of temperature and hence with the increase in temperature the viscosity of a liquid decreases.
– Poiseuille gave the following formula, showing interdependence of the viscosity of a liquid on temperature.

For Liquid

$$\mu = \mu_0 \left(\frac{1}{1 + \alpha t + \beta t^2} \right)$$

where μ = viscosity of the liquid at t°C in poise

μ_0= viscosity of the liquid at 4°C in poise

α and β are constant characteristics of the liquid

For water,

μ_0= 0.01776 poise α = 0.03368 β = 0.000221

For gas

– In this case of gases, viscosity depends mainly on transfer of molecular momentum in a direction at right angles to the direction of motion. As the temperature increases, the molecular agitation increases i.e. there will be large momentum transfer and hence the viscosity increases.

$$\mu = \mu_0 + \alpha t - \beta t^2$$

1.5 Classification of fluid

- The fluid may be classified into the following five types:
  1. Ideal fluid
  2. Real fluid
  3. Newtonian fluid
  4. Non-Newtonian fluid
  5. Ideal plastic fluid.

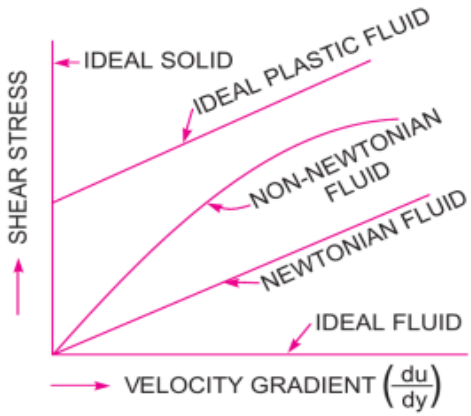

Fig.1.2 Types of fluid

1. Ideal Fluid

- A fluid, which is incompressible and is having no viscosity, is known as ideal fluid.
- Ideal fluid is only an imaginary fluid because all the fluids, which exit, have some viscosity.

2. Real Fluid

- A fluid which possesses viscosity is known as real fluid.
- All the fluids in practice are real fluids.

3. Newtonian fluid

- A real fluid, in which the shear stress is directly proportional to the rate of shear strain (or velocity gradient), is known as the Newtonian fluid.
- Example : Water, Air, Thin motor oil

4. Non-Newtonian Fluid

- A real fluid, in which the shear stress is not proportional to the rate of shear strain (or velocity gradient), is known as the non-Newtonian fluid.
- Example : Tooth Paste

5. Ideal-Plastic Fluid

- A fluid, in which shear stress is more than the yield value and shear stress is proportional to the rate of shear strain(or velocity gradient), is known as ideal plastic fluid.
- Example : Sewage sludge

1.6 Surface tension

- **Surface tension** is defined as the tensile force acting on the surface of a liquid in contact with a gas or on the surface between two immiscible liquid such that the contact surface behaves like a membrane under tension.

- It is denoted by Greek letter σ (sigma).
- **SI unit** of surface tension is **N/m**, and MKS unit is kgf/m.

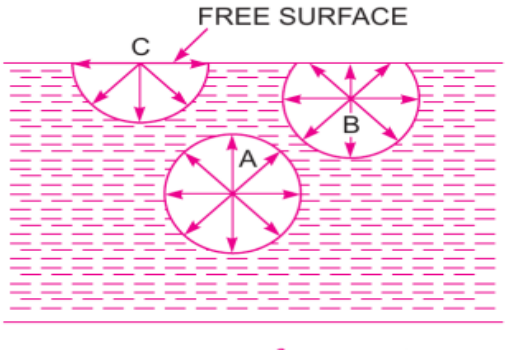

Fig.1.3 Surface tension

- Consider three molecules A,B,C of a liquid in a mass of liquid.
- The molecule A is attracted in all directions equally by the surrounding molecules of the liquid. Thus resultant force acting on molecule A is zero.
- But molecule B, which is situated near the free surface, is acted upon by upward and downward forces which are unbalanced. Thus a net resultant force on molecule B is acting in the downward direction.
- The molecule C, Situated on the free surface of liquid, does experience resultant downward force.
- All the molecules on the free surface of the liquid act like a very thin film under tension of the surface of the liquid act as through it is an elastic membrane under tension.

• Surface Tension on Liquid Droplet

- Consider a small spherical droplet of a liquid of radius 'r'. On the entire surface of the droplet, the tensile force due to surface tension will be acting.
- Let σ = Surface tension of the liquid

  p = Pressure intensity inside the droplet (in excess of the outside pressure)

  d = Dia. of droplet

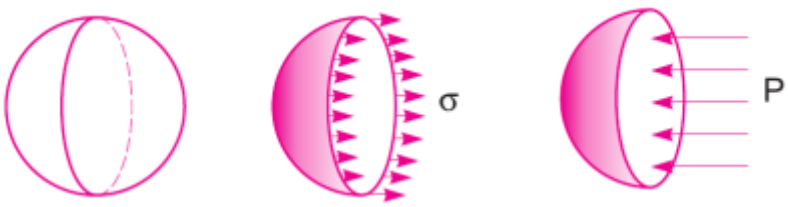

(a) Droplet *(b) Surface Tension* *(c) Pressure Force*

Fig.1.4 Force on droplet

- Let droplet is cut into two halves.
- The forces acing on one half (say left half) will be….

I. tensile force due to surface tension acting around the circumference of the cut portion as shown in fig 1.4 and is equal to

$$= \sigma \times \text{Circumference}$$

$$= \sigma \times \pi d$$

II. Pressure force on the area

$$= p \times \frac{\pi}{4} d^2$$

- These two forces will be equal and opposite under equilibrium condition i.e.,

$$p \times \frac{\pi}{4} d^2 = \sigma \times \pi d$$

$$\therefore p = \frac{\sigma \times \pi d}{\frac{\pi}{4} d^2}$$

$$\boxed{\therefore p = \frac{4\sigma}{d}}$$

- Equation shows that with increase of diameter of the droplet, pressure intensity inside the droplet decreases.

• Surface Tension on a Hollow Bubble

- A hollow bubble like a soap bubble in air has two surfaces in contact with air, one inside and other outside.
- Thus two surfaces are subjected to surface tension.

$$p \times \frac{\pi}{4} d^2 = 2(\sigma \times \pi d)$$

$$\therefore p = \frac{2\sigma \times \pi d}{\frac{\pi}{4} d^2}$$

$$\boxed{\therefore p = \frac{8\sigma}{d}}$$

• Surface Tension on a Liquid Jet

- Consider a liquid jet of diameter ‘d’ and length ‘L’ as shown in fig 1.5.

Let σ = Surface tension of the liquid

p = Pressure intensity inside the liquid jet above the outside pressure

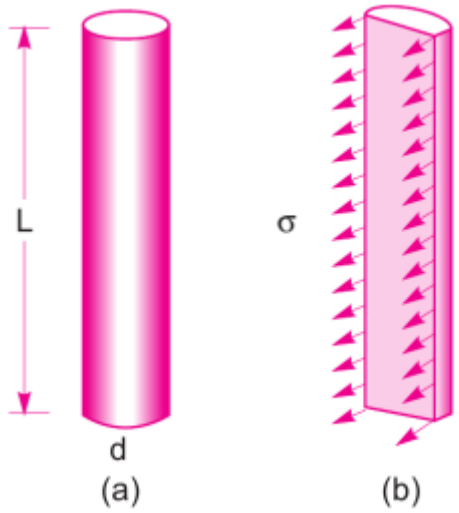

Fig.1.5 Forces on liquid jet

– The equilibrium of the semi jet, we have

$$\text{Force due to pressure} = p \times \text{area of semi jet}$$
$$= p \times L \times d$$
$$\text{Force due to surface tension} = \sigma \times 2L$$

– Equating the forces we have

$$\therefore p \times L \times d = \sigma \times 2L$$
$$\boxed{\therefore p = \frac{2\sigma}{d}}$$

1.7 Capillarity or Meniscus Effect

– **Capillarity** is defined as a phenomenon of rise or fall of s liquid surface in a small tube relative to the adjacent general level of liquid when tube is held vertically in the liquid.
– The rise of the liquid surface is known as *capillarity rise* while the fall of liquid surface is known as *capillarity depression or fall*.
– It is expressed in terms of cm or mm of liquid.
– Its value depends upon the specific weight of the liquid, diameter of the tube and surface tension of the liquid.

- **Expression for Capillarity Rise**

– Consider a glass tube of small diameter 'd' opened at the both ends and is inserted in a liquid, say water. The liquid will rise in the tube above the level of liquid.

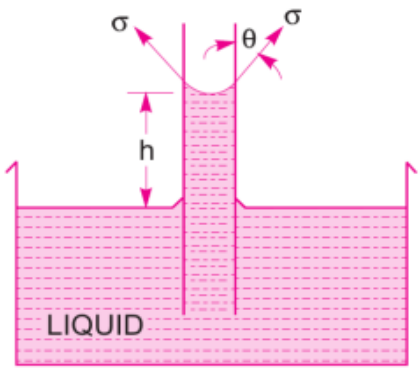

Fig.1.6 Capillarity rise

- Let h=height of liquid in the tube.
- Under a state of equilibrium, weight of liquid of height h is balanced by the force at the surface of the liquid in the tube. But the force at the surface of the liquid in the tube is due to the surface tension.
- Let σ = Surface tension of liquid
  θ = Angle of contact between liquid and glass tube.

$$\text{Weight of liquid of height h in the tube} = (\text{Area of tube} \times h) \times \rho \times g$$

$$= \frac{\pi}{4} d^2 \times h \times \rho \times g \qquad \cdots\cdots\cdots(1)$$

where ρ = density of liquid

$$\text{Vertical component of the surface tensile force} = (\sigma \times \text{Circumference}) \times \cos\theta$$

$$= \sigma \times \pi d \times \cos\theta \qquad \cdots\cdots\cdots(2)$$

For equilibrium, equating (1) and (2)

$$\frac{\pi}{4} d^2 \times h \times \rho \times g = \sigma \times \pi d \times \cos\theta$$

$$\therefore h = \frac{\sigma \times \pi d \times \cos\theta}{\frac{\pi}{4} d^2 \times \rho \times g}$$

$$\boxed{\therefore h = \frac{4\sigma\cos\theta}{\rho g d}}$$

- The value of θ between water and clean glass tube is approximately equal to zero and hence $\cos\theta$ is equal to unity.
- Then rise of water is given by

$$h = \frac{4\sigma}{\rho g d}$$

- **Expression for Capillarity Fall**

– If the glass tube is dipped in mercury, the level of mercury in the tube will be lower than general level of the outside liquid as shown in fig 1.7.

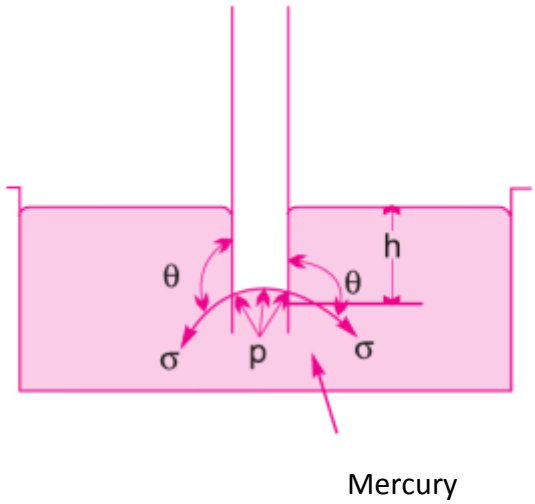

Fig.1.7 capillarity fall

– Let h = height of depression in tube

– Then in equilibrium, two forces are acting on the mercury inside the tube. First one is due to surface tension acting in the downward direction and is equal to

$$= \sigma \times \pi d \times \cos\theta \qquad \cdots\cdots\cdots(1)$$

– Second force is due to hydrostatic force acting upward and is equal to intensity of the pressure at the depth 'h' X Area

$$= p \times \frac{\pi}{4} d^2$$

$$= \rho g h \times \frac{\pi}{4} d^2 \qquad \cdots\cdots\cdots(2)$$

– Equating the two forces

$$\sigma \times \pi d \times \cos\theta = \rho g h \times \frac{\pi}{4} d^2$$

$$\boxed{\therefore h = \frac{4\sigma\cos\theta}{\rho g d}}$$

– Value of θ for mercury and glass tube is 128°.

1.8 Vapor Pressure and Cavitation

– A change from a liquid state to gaseous state is known as **vaporization**.

– Vaporization (which is depend upon the prevailing pressure and temperature condition) occure because of continuous escaping of the molecules through the free liquid surface.

- Consider a liquid (say water) which is confined in a closed vessel.
- Let the temperature of liquid is 20°C and pressure is atmospheric. This liquid is vaporize at 100°C.
- When vaporization takes place, the molecules escapes from the free surface of the liquid. These vapor molecules get accumulated in the space between the free liquid surface and top of the vessel.
- These accumulated vapors exert pressure on the liquid surface. This pressure is known as **vapor pressure** of the liquid or this is the pressure at which the liquid is converted into vapors.
- Again consider the same liquid at 20°C at the atmospheric pressure in the closed vessel. If the pressure above the liquid surface is reduced by some means, the boiling temperature will also reduce.
- If the pressure is reduced to such an extent that it become equal to or less than vapor pressure, the boiling of liquid will start, though the temperature of liquid is 20°C.
- Thus a liquid may boil even at ordinary temperature, if the pressure above the liquid surface is reduced so as to be equal or less than the vapor pressure of the liquid at that temperature.
- Now consider a flowing liquid in a system. If the pressure at any point in this flowing liquid becomes equal to or less than the vapor pressure, the vaporization of the liquid starts.
- The bubbles of these vapors are carried by the flowing fluid into the region of the high pressure where they collapse, giving rise to high impact pressure.
- The pressure developed by the collapsing bubbles is so high that the material from adjoining boundaries gets eroded and cavities are formed on them. This phenomenon is known as **cavitation**.
- Hence the **cavitation is the phenomenon of formation of vapor bubbles of a flowing liquid in a region where the pressure of the liquid falls below the vapor pressure and sudden collapsing of these vapor bubbles in a region of higher pressure**.
- When vapor bubbles collapse, a very high pressure is created. The metallic surface, above which the liquid is flowing, is subjected to these high pressures, which cause pitting action on the surface. Thus cavities are formed on the metallic surface and hence the name is cavitation.

1.9 Compressibility and bulk modulus

- Bulk modulus is defined as the ratio of compressive stress (increase in pressure) to volumetric strain.
- Consider a cylinder fitted with a piston as shown in fig.
- Let the pressure is increase to $p + dp$, the volume of gas decrease from V to $V - dV$.

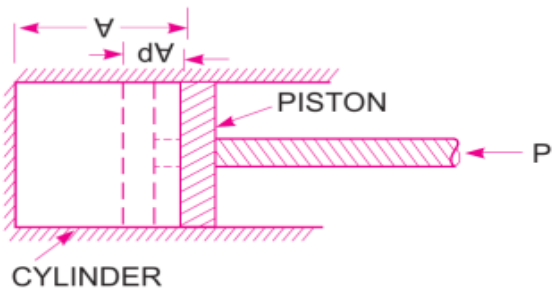

Fig 1.8

Then increase in pressure $= dp \text{ kgf}/m^2$

Decrease in volume $= dV \ m^3$

$$\therefore \text{Volumetric strain} = -\frac{dV}{V}$$

(-ve sign means the volume decreases with increase of pressure)

$$\therefore \text{Bulk mobulus} \quad K = \frac{\text{Increase of pressure}}{\text{Volumetric strain}}$$

$$= \frac{dp}{-\frac{dV}{V}}$$

$$= \frac{-dp}{dV} V$$

$$\text{Compressibility} = \frac{1}{K}$$

- **Kinematic viscosity**

– It is define as the ratio between the dynamic viscosity and density of fluid.

– It is denoted by the Greek symbol ν(called 'nu').

– Thus mathematically,

$$\upsilon = \frac{\text{Viscosity}}{\text{Density}}$$

$$\boxed{\therefore \upsilon = \frac{\mu}{\rho}}$$

<u>Unit</u>

$$\upsilon = \frac{\text{Unit of } \mu}{\text{Unit of } \rho} = \frac{\text{Force} \times \text{Time}}{(\text{Length})^2 \times \frac{\text{Mass}}{(\text{Length})^3}}$$

$$= \frac{\text{Force} \times \text{Time}}{\frac{\text{Mass}}{\text{Length}}}$$

$$= \frac{\text{Mass} \times \frac{\text{Length}}{(\text{Time})^2} \times \text{Time}}{\frac{\text{Mass}}{\text{Length}}} = \boxed{\frac{(\text{Length})^2}{\text{Time}}}$$

- In **MKS** system and **SI** the unit of kinematic viscosity is **m^2/s**.
- In CGS system it is **cm^2/s.**

NOTE :

$$1 \text{ stoke} = 1 \text{ cm}^2/\text{s} = \left(\frac{1}{100}\right)^2 \text{ m}^2/\text{s} \quad \boxed{\Rightarrow \textbf{1 stoke} = \textbf{10}^{-4}\textbf{m}^2/\textbf{s}}$$

1.10 Hypothesis of continuum

- Fluids are aggregation of molecules, widely spaced for a gas, closely spaced for a liquid.
- The distance between molecules is very large compared with the molecules diameter.
- Molecules are not fixed in a lattice but move about freely relative to each other. Thus fluid density, or mass per unit volume, has no precise meaning because the number of molecules occupying a given volume continuously changes.
- To illustrate consider a large container filed with a very small mass of gas such that only a few molecules are present. Due to the lesser number of molecules the force exerted per unit area on the tank wall due to boundary off the molecules, will depends on probability of molecules bouncing of a particular wall at a time.
- The pressure will vary in discontinuous fashion. Therefore distribution of matter is not continuous i.e. continuum does not exits.
- Similarly, in case of very small of volumes of a dense gas which contains very few molecules, the continuum will not exit.
- It is necessary to consider that the actual molecular structure is replaced by hypothetical continuous medium, called the continuum.
- Without the concept of continuum one would have to take into account the action of each molecule or group of molecules in a flow.

1.11 LIST OF FORMULA

(1) $\rho = \frac{m}{V}$ (For water $\rho = 1000\ kg/m^3$)

(2) $w = \frac{W}{V} = \rho \times g$

(3) Specific volume $= \frac{V}{m} = \frac{1}{\rho}$

(4) $S_{liquid} = \frac{\rho_{liquid}}{\rho_{water}}$ (For mercury $S = 13.6$)

(5) $\tau = \mu \frac{du}{dy}$

(6) Bulk mobulus $K = \frac{dp}{-\frac{dV}{V}}$

(7) Compressibility $= \frac{1}{K}$

(8) Kinematic viscosity $\upsilon = \frac{\mu}{\rho}$

(9) Capillarity rise or fall $h = \frac{4\sigma\cos\theta}{\rho g d}$

(10) Surface tension

For Water droplet $p = \frac{4\sigma}{d}$

For soap bubble $p = \frac{8\sigma}{d}$

For liquid jet $p = \frac{2\sigma}{d}$

1.12 Solved Numericals

Example 1: A 50 mm diameter shaft rotates with 500 mm rpm in a 80mm long Journal bearing with 51 mm internal diameter. The annular space between the shaft and bearing is filled with lubricating oil of dynamic viscosity 1 poise. Determine the torque required and power absorbed to overcome friction.

Solution:

Given data:

$d = 50\,mm = 0.050\,m$ $\quad N = 500\,rpm$

$L = 80\,mm = 0.08\,m$ $\quad \mu = 1\,poise = 0.1\,N \cdot s/m^2$

$D = 51\,mm = 0.051\,m$

Find:

$T = ?$

$P = ?$

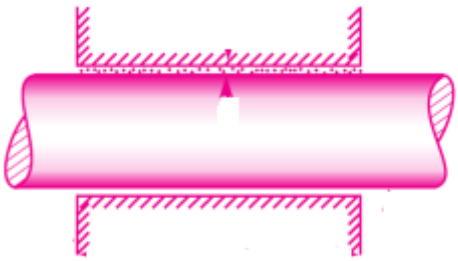

Fig. 1.9 Journal bearing

$\rightarrow$ Power $P = \dfrac{2\pi NT}{60}$ $\quad \cdots\cdots\cdots(1)$

$\rightarrow$ Torque $T = F \times \dfrac{d}{2}$ $\quad \cdots\cdots\cdots(2)$

$\rightarrow$ Shear Stress

$$\tau = \mu \frac{du}{dy}$$

$$\therefore \frac{F}{A} = \mu \frac{du}{dy}$$

$$\therefore F = A\mu \frac{u-0}{dy}$$

$$\therefore F = \pi dL \times \mu \times \frac{u-0}{dy}$$

$$\therefore F = \pi \times 0.05 \times 0.08 \times 0.1 \times \frac{1.309 - 0}{0.5 \times 10^{-3}} \quad \left\{ \begin{array}{l} \because u = \frac{\pi dN}{60} = \frac{\pi \times 0.05 \times 500}{60} = 1.309\,m/s \\ dy = \frac{D-d}{2} = \frac{(51-50) \times 10^{-3}}{2} = 0.5 \times 10^{-3} m \end{array} \right\}$$

$$\therefore F = 3.2898\,N$$

→ Putting this value in equation (2)

$$\therefore \text{ Torque } T = 3.2898 \times \frac{0.05}{2}$$

$$\boxed{T = 0.0822\,N \bullet m}$$

→ From equation (1)

$$\text{Power } P = \frac{2\pi NT}{60} = \frac{2\pi \times 500 \times 0.0822}{60}$$

$$\boxed{\therefore P = 4.304\,W}$$

Example 2: A plate, 0.03 mm distant from a fixed plate, moves at 70 cm/s and requires a force of 3N/m^2 to maintain this speed. Calculate the Fluid viscosity between the plates.

Solution:

Given data:

$$dy = 0.03\,mm = 0.03 \times 10^{-3} m$$
$$F = 3\,N/m^2$$
$$u = 70\,cm/s = 0.7\,m/s$$

Find:

$$\mu = ?$$

→ Here force F is given in N/m^2 which is the shear stress τ

$$\tau = \mu \frac{du}{dy}$$
$$= \mu \frac{u-0}{dy}$$
$$\therefore 3 = \mu \frac{0.7-0}{0.03 \times 10^{-3}}$$

$$\boxed{\begin{array}{l} \therefore \mu = 1.28 \times 10^{-4}\ N \cdot s/m^2 \\ \therefore \mu = 1.28 \times 10^{-3}\ \text{poise} \end{array}}$$

Example 3: The pressure outside the droplet of water of diameter 0.04 mm is 10.21 N/cm^2 (at atmospheric pressure). Calculate pressure within the droplet if surface tension is given as 0.075 N/m of water.

Solution:

Given data:

Diameter of droplet $d = 0.04\ \text{mm} = 0.04 \times 10^{-3}\ \text{m}$

Pressure outside the droplet $= 10.32\ \text{N/cm}^2 = 10.32 \times 10^4\ \text{N/m}^2$

Surface tension $\sigma = 0.075\ \text{N/m}$

Find:

pressure within the droplet = ?

→ The pressure inside the droplet, in excess of outside pressure is given by equation

$$p = \frac{4\sigma}{d} = \frac{4 \times 0.075}{0.04 \times 10^{-3}} = 7250\ \text{N/m}^2 = \frac{7250\ \text{N}}{10^4\ \text{cm}^2} = 0.725\ \text{N/cm}^2$$

$\therefore$ Pressure inside the droplet = p + pressure outside the droplet

$= 0.725 + 10.31$

$$\boxed{= 11.045\ \text{N/cm}^2}$$

2

PRESSURE AND HEAD

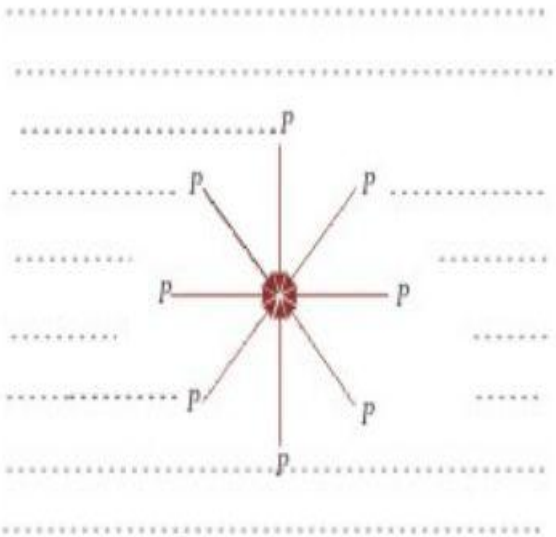

Course Contents

2.1 Introduction

2.2 Types of pressure

2.3 Pascal's law

2.4 Pressure variation in fluid at rest (Hydrostatic law)

2.5 Measurement of Pressure

2.6 Simple Manometers

2.7 Differential Manometers

2.8 Pressure Gauges

2.9 Solved Numerical

2.1 Pressure

- When a certain mass of fluids is held in static equilibrium by confining it within solid boundaries, it exerts force along direction perpendicular to the boundary in contact. This force is called fluid pressure. (Fig. 2.1)
- "It is defined as a normal force exerted by a fluid per unit area." Unit: 1 Pa = 1 N/m^2

  1 bar = 10^5 N/m^2

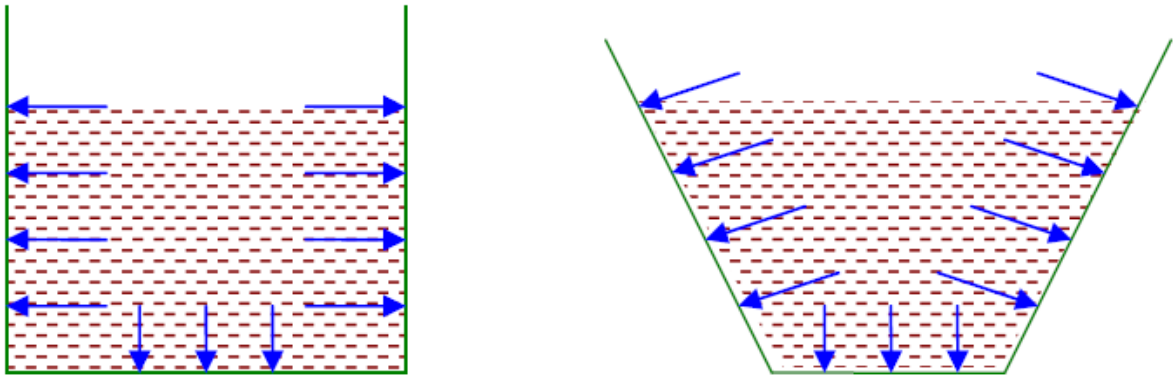

Fig. 2.1 Normal force exerted by a fluid to the boundary of surface

2.2 Types of Pressures

2.2.1 Atmospheric Pressure

- Air above the surface of liquids exerts pressure on the exposed surface of the liquid and normal to the surface. This pressure exerted by the atmosphere is called atmospheric pressure.
- Atmospheric pressure at a place depends on the elevation of the place and the temperature.
- Atmospheric pressure is measured using an instrument called 'Barometer' and hence atmospheric pressure is also called Barometric pressure.

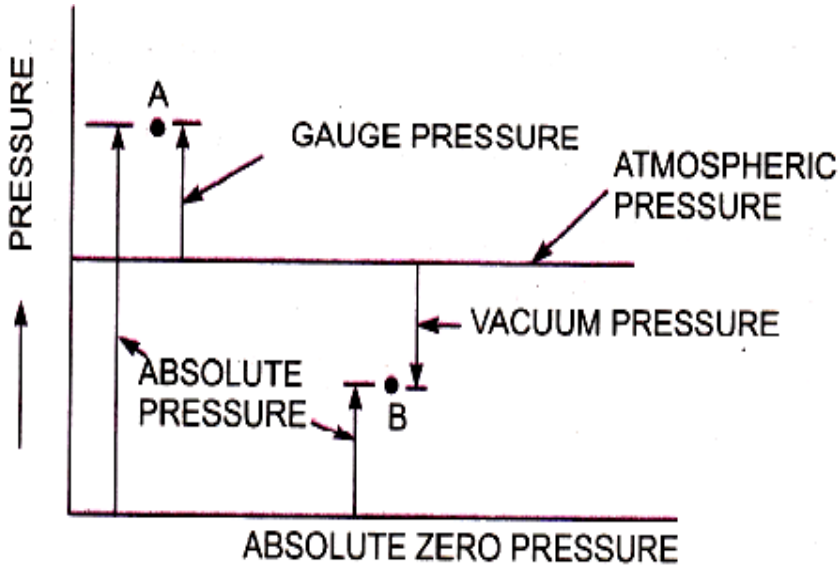

Fig. 2.2 Relationship between pressures

2.2.2 Absolute Pressure

- It is defined as the pressure which is measured with reference to absolute zero pressure. It is given by $p_{abs} = p_{gauge} + p_{atm}$ (Fig. 2.2)
- Absolute pressure at a point can never be negative since there can be no pressure less than absolute zero pressure.

2.2.3 Gauge Pressure

- It is defined as the pressure which is measured above the atmospheric pressure.
- It can be measured by pressure measuring instrument in which atmospheric pressure is taken as datum and it marked as zero.

2.2.4 Vacuum Pressure (Negative Gauge Pressure)

- It is defined as the pressure below the atmospheric pressure. It is given by $p_{vac} = p_{atm} - p_{abs}$.

2.3 Pascal's Law

Pascal's law: "Pressure or Intensity of pressure at a point in a static mass of fluid is equal in all directions."

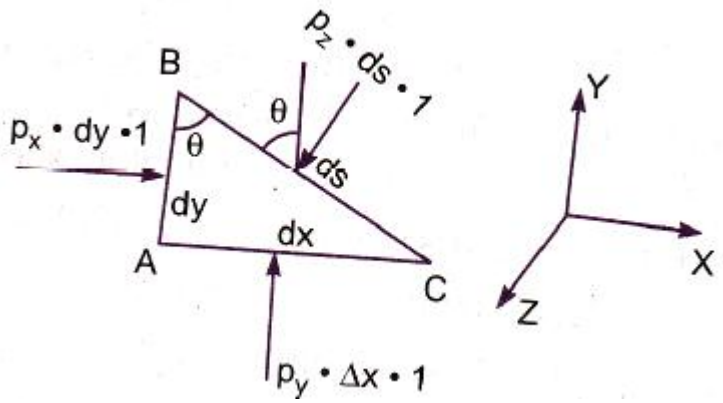

Fig. 2.3 Forces on a fluid element

Proof:

- Let us consider an arbitrary fluid element of wedge shape $(\angle ABC = \theta)$ in fluid mass at rest with three planes around a point shown in Fig. 2.3. Let p_x, p_y and p_z are the intensity of pressure acting on the face in different directions with width of element perpendicular to the plane of paper is unity $(dz = 1)$. The system of forces should be in equilibrium.

The forces acting on the elements are:

1. Pressure forces normal to the surfaces and,
2. Weight of the fluid element in the vertical direction.

Pressure force on the face AB $= p_x \times$ Area of face AB $= p_x \times dy \times dz$

Pressure force on the face BC $= p_z \times$ Area of face BC $= p_z \times ds \times dz$

Pressure force on the face AC $= p_y \times$ Area of face AC $= p_y \times dx \times dz$

Weight of element $= (\text{Mass of element}) \times g = (\text{Volume } \times \rho) \times g = \left(\frac{dx \times dy}{2} \times dz \times \rho \right) \times g$

Resolving the forces in x direction, $\sum F_x = 0$ thus we have,

$$p_x \times dy \times dz - p_z \times (ds \times dz) \sin(90 - \theta) = 0$$

$$p_x \times dy \times 1 - p_z \times (ds \times 1) \cos\theta = 0 \qquad (\because ds \cos\theta = dy)$$

$$p_x = p_z \quad \text{..... (2.1)}$$

Resolving the forces in y direction, $\sum F_y = 0$ thus we have,

$$p_y \times dx \times dz - p_z \times (ds \times dz) \cos(90 - \theta) - \frac{dx \times dy}{2} \times dz \times \rho \times g = 0$$

$$p_y \times dx \times 1 - p_z \times (ds \times 1) \sin\theta - \frac{dx \times dy}{2} \times 1 \times \rho \times g = 0 \qquad (\because ds \sin\theta = dx)$$

Neglect the weight of very small element,

$$p_y = p_z \quad \text{..... (2.2)}$$

From equation (2.1) and (2.2) we have,

$$p_x = p_y = p_z \quad \text{..... (2.3)}$$

The above equation shows that intensity of pressure at a point in a static mass of fluid is equal in all directions.

2.4 Pressure Variation in Fluid at Rest (Hydrostatic Law)

Hydrostatic law: "Rate of increase of pressure in vertically downward direction must be equal to the weight density of the fluid at that point".

Proof:

Consider the small cylindrical fluid element as shown in Fig. 2.4.

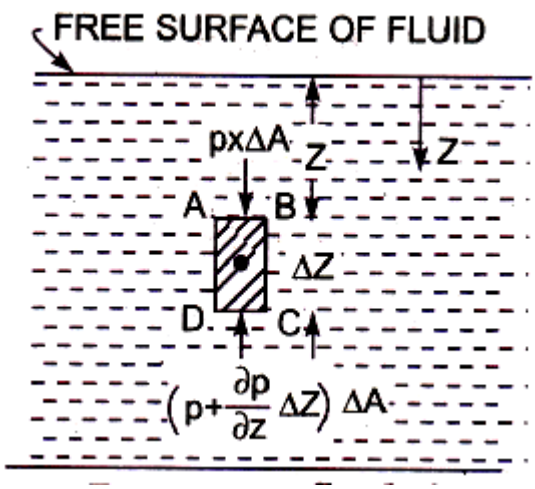

Fig. 2.4 Forces on a fluid element

Let, $\Delta A =$ Cross sectional area of element

$\Delta Z =$ Height of fluid element

$p =$ Pressure on face AB

$Z =$ Distance of fluid element from free surface

The forces acting on the elements are:

1. Pressure force on face AB $= p \times \Delta A$ and acting $\perp$ to face AB in the vertical $\downarrow$ direction.
2. Pressure force on face CD $= \left(p + \frac{\partial p}{\partial z} \Delta Z \right) \times \Delta A$ and acting $\perp$ to face CD in the vertical $\uparrow$ direction.
3. Weight of fluid element $= \text{Density} \times \text{g} \times \text{Volume} = \rho \times g \times (\Delta A \times \Delta Z)$
4. Pressure forces on surface BC and AD are equal and opposite.

For equilibrium of fluid element, we have

$$p\Delta A - \left(p + \frac{\partial p}{\partial z} \Delta Z \right) \times \Delta A + \rho \times g \times (\Delta A \times \Delta Z) = 0$$

$$p\Delta A - p\Delta A - \frac{\partial p}{\partial z} \Delta Z \Delta A + \rho \times g \times \Delta A \times \Delta Z = 0$$

$$-\frac{\partial p}{\partial z} \Delta Z \Delta A + \rho \times g \times \Delta A \times \Delta Z = 0$$

$$\frac{\partial p}{\partial z} = \rho \times g = \text{Weight density of fluid} \quad \text{..... (2.4)}$$

Above equation states that rate of increase of pressure in vertically downward direction must be equal to the weight density of the fluid at that point. This is known as *hydrostatic law*.

By integrating above equation (2.4),

$$\int dp = \int \rho g dz$$

$p = \rho g z$ And $z = \frac{p}{\rho g}$ where z is called pressure head

[Note: 1 bar = 10.33 m of water OR 760 mm of mercury.]

2.5 Measurement of Pressure

Various devices used to measure fluid pressure can be classified into,

1. Manometers 2. Mechanical gauges

2.5.1 Manometers

- Manometers are the pressure measuring devices which are based on the principal of balancing the column of the liquids whose pressure is to be measured by the same liquid or another liquid.

Classification of Manometers

Manometers are broadly classified into:

A. Simple Manometers
B. Differential Manometers

2.5.2 Mechanical Gauges

- Mechanical gauges consist of an elastic element which deflects under the action of applied pressure and this movement will operate a pointer on a graduated scale.

The mechanical pressure gauges are:

1. Diaphragm pressure gauge
2. Bourdon tube pressure gauge
3. Dead weight pressure gauge
4. Below pressure gauge

2.6. Simple Manometers

Simple monometers consists of glass tube having one of its end connected to a point where pressure is to be measured and other end is open to atmosphere.

Types of Simple manometers are:

1. Piezometer
2. U-tube manometer
3. Single column manometer
4. Inclined column manometer

2.6.1 Piezometer

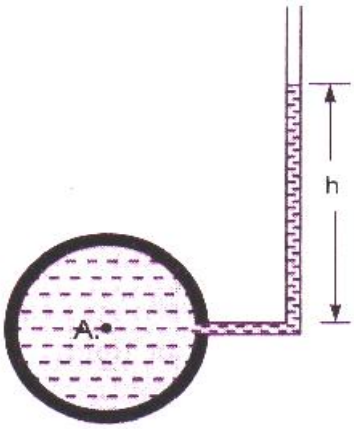

Fig. 2.5 Piezometer

- It consists of a glass tube inserted in the wall of the vessel or pipe at the level of point at which the intensity of pressure is to be measured as shown in Fig. 2.5. The other end of the piezometer is exposed to air. The height of the liquid in the piezometer gives the pressure head from which the intensity of pressure can be calculated.
- If at a point A, the height of liquid say water h in piezometer tube, then pressure at point A is given by ρgh according to the Hydrostatic law. So, In equilibrium condition, $p_A = \rho gh$
- To minimize capillary rise effects the diameters of the tube is kept more than 12mm.

Merits

1. Simple in construction
2. Economical

Demerits

1. Not suitable for high pressure intensity.
2. Pressure of gases cannot be measured.

2.6.2 U-tube Manometer

- A U-tube manometer consists of a glass tube bent in U-Shape, one end of which is connected to the point at which pressure is to be measured and the other end is exposed to atmosphere. U-tube consists of a liquid of specific of gravity is greater than the specific gravity of the liquid whose pressure intensity is to be measured.

(A) For Gauge Pressure

- Let B is the point at which pressure is to be measured, whose value is p . The datum line is $A-A$ as shown in Fig. 2.6 (a).

Let $h_1 =$ Height of the light liquid above the datum line

$h_2 =$ Height of the heavy liquid above the datum line

$S_1 =$ Specific gravity of light liquid and ρ_1 is density of light liquid

$S_2 =$ Specific gravity of heavy liquid and ρ_2 is density of heavy liquid

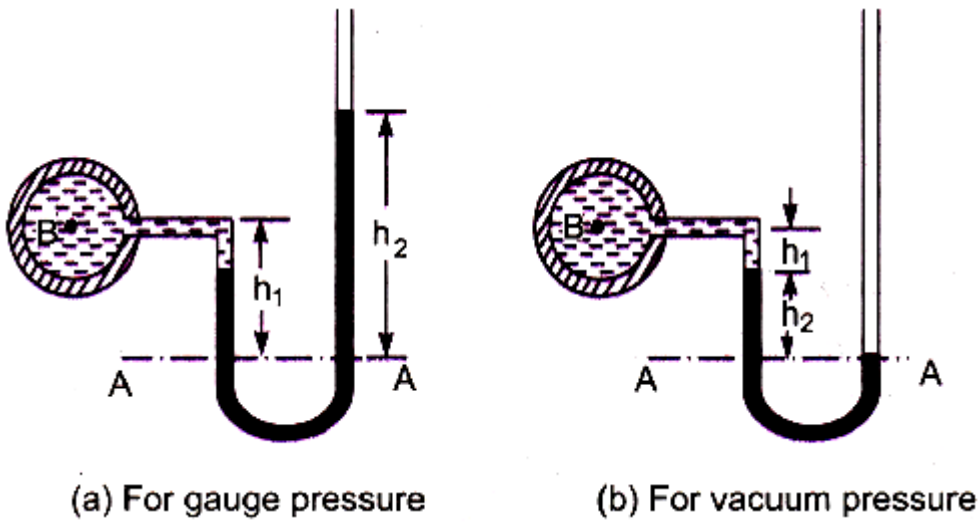

Fig. 2.6 U-tube manometer

- As the pressure is the same for the horizontal surface. Hence pressure above the horizontal datum line $A-A$ in the left column and in the right column of U-tube manometer should be same.

Pressure above datum line above $A-A$ in the left column $= p + \rho_1 g h_1$

Pressure above datum line above $A-A$ in the right column $= \rho_2 g h_2$

Hence equating the two pressures $p + \rho_1 g h_1 = \rho_2 g h_2$

$$p = \rho_2 g h_2 - \rho_1 g h_1$$

(B) For Vacuum Pressure

- For measuring vacuum pressure, the level of the heavy liquid in the manometer will be as shown in Fig. 2.6 (b).

Pressure above datum line above $A-A$ in the left column $= \rho_2 g h_2 + \rho_1 g h_1 + p$

Pressure above datum line above $A-A$ in the right column $= 0$

Hence equating the two pressures $\rho_2 g h_2 + \rho_1 g h_1 + p = 0$

$$p = -\left(\rho_2 g h_2 + \rho_1 g h_1\right)$$

2.6.3. Single Column Manometer

- A single column manometer is a modified form of U-tube manometer in which reservoir having large cross sectional area (100 times) as compared to cross sectional area of U – tube connected to it as shown in Fig. 2.7.
- For any change in pressure, change in the level of manometeric liquid in the reservoir is small and change in level of manometric liquid in the U- tube is large. The other limb may be vertical or inclined. Thus there are two type of single column manometer as:
  1. Vertical single column manometer
  2. Inclined single column manometer

1. Vertical Single Column Manometer

- Fig. 2.7 shows the vertical single column manometer. Let $X-X$ be the datum line in the reservoir and in the right limb of the manometer, when it is not connected to the pipe. When the manometer is connected to the pipe, due to high pressure at A, the heavy liquid in the reservoir will be pushed downwards and will rise in the right limb.

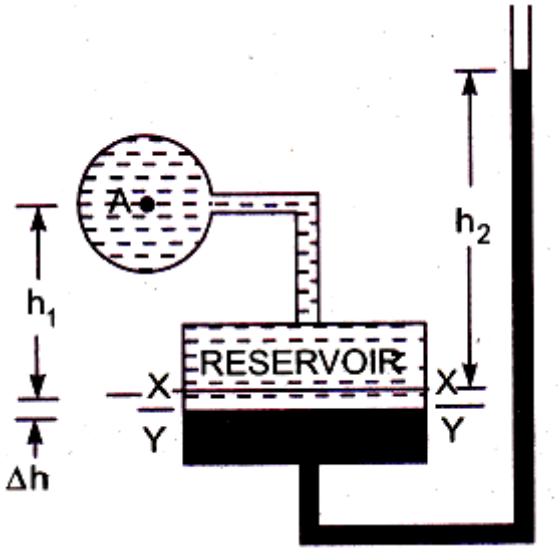

Fig. 2.7 Vertical single column manometer

Let $\Delta h =$ Fall of the heavy liquid in reservoir

$h_2 =$ Rise of heavy liquid in right limb

$h_1 =$ Height of centre of pipe above $X-X$

$p_A =$ Pressure at A, which is to be measured

$A =$ Cross section area of the reservoir

$a =$ Cross section area of the right limb

$S_1 =$ Specific gravity of liquid in pipe and ρ_1 is density of liquid in pipe

$S_2 =$ Specific gravity of heavy liquid in reservoir and right limb and ρ_2 is density of liquid in reservoir

Fall of heavy liquid in reservoir will cause a rise of heavy liquid level in the right limb.

$$A \times \Delta h = a \times h_2$$

$$\Delta h = \frac{a \times h_2}{A} \quad \text{.....(2.5)}$$

Now consider the datum line $Y-Y$. Then pressure in the right limb above $Y-Y$

$$= \rho_2 \times g \times (\Delta h + h_2)$$

Then pressure in the left limb above $Y-Y$

$$= \rho_1 \times g \times (\Delta h + h_1) + p_A$$

Equating the pressures we have,

$$\rho_2 g \times (\Delta h + h_2) = \rho_1 g \times (\Delta h + h_1) + p_A$$

$$p_A = \Delta h[\rho_2 g - \rho_1 g] + \rho_2 g h_2 - \rho_1 g h_1$$

Substituting the $\Delta h = \frac{a \times h_2}{A}$ in above equation, we get

$$p_A = \frac{a \times h_2}{A}[\rho_2 g - \rho_1 g] + \rho_2 g h_2 - \rho_1 g h_1$$

As the area A is very large compared to a, hence $\frac{a}{A}$ becomes very small and can be neglected. Then

$$p_A = \rho_2 g h_2 - \rho_1 g h_1 \quad \text{.....(2.6)}$$

2. Inclined Single Column Manometer

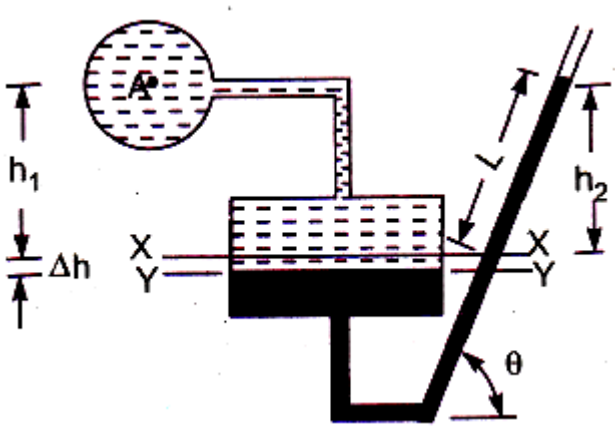

Fig. 2.8 Inclined single column manometer

– Fig. 2.8 shows the inclined single column manometer. This manometer is more sensitive. Due to inclination the distance moved by the heavy liquid in the right limb will be more.

Let $L =$ length of heavy liquid moved in right limb form $X-X$

$\theta =$ Inclination of right limb with horizontal

$h_2 =$ Vertical rise of heavy liquid in right limb from $X-X = L \times \sin\theta$

From equation (2.6), the pressure at A is,

$$p_A = \rho_2 g h_2 - \rho_1 g h_1$$

$$p_A = \sin\theta \rho_2 g - \rho_1 g h_1$$

2.7 Differential Manometers

- Differential manometers are used to measure the pressure difference between two points. It is consists of a U-tube, containing heavy liquid, whose two ends are connected to the two points, whose difference of pressure is to be measured.

Types of differential manometers are:

1. U-tube Differential manometers
2. Inverted U-tube differential manometers

2.7.1 U-Tube Differential Manometers

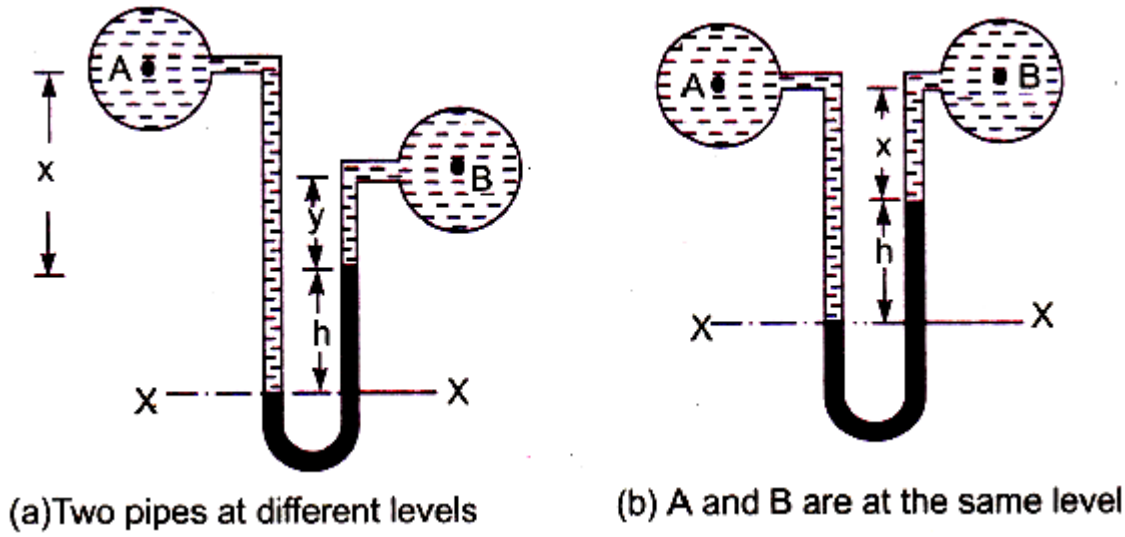

Fig. 2.9 U-tube differential manometer

- In Fig. 2.9 (a), the two points A and B are at different level and also contained liquids of different specific gravity. These points are connected to the U-tube manometer. Let the pressure at A and B are P_A and p_B.

Let $h =$ Difference of mercury level

$y =$ Distance of the centre of B, from the mercury level in the right limb

$x =$ Distance of the centre of A, from the mercury level in the right limb

$\rho_1 =$ Density of liquid at A

$\rho_2 =$ Density of liquid at B

$\rho_g =$ Density of heavy liquid

Taking at datum line at $X - X$.

Pressure above $X - X$ in the left limb $= \rho_1 g(h+x) + p_A$

Pressure above $X - X$ in the right limb $= \rho_g gh + \rho_2 gy + p_B$

Equating the two pressures, we have

$$\rho_1 g(h+x) + p_A = \rho_g gh + \rho_2 gy + p_B$$

$$p_A - p_B = \rho_g gh + \rho_2 gy - \rho_1 g(h+x)$$

In Fig. 2.9 (b), the two points A and B are at same level and contained liquids of density.

Pressure above $X - X$ in the right limb $= \rho_g gh + \rho_1 gx + p_B$

Pressure above $X-X$ in the left limb $= \rho_1 g(h+x) + p_A$

Equating the two pressures, we have

$$\rho_g gh + \rho_1 gx + p_B = \rho_1 g(h+x) + p_A$$

$$p_A - p_B = \rho_g gh + \rho_1 gx - \rho_1 g(h+x)$$

2.7.2 Inverted U-Tube Differential Manometers

- It consists of an inverted U-tube having two ends are connected to the pipes at points A and B whose difference of pressure is to be measured as shown in Fig. 2.10. It is used for measuring the difference of low pressures. Let the pressure at A is more than the pressure at B.

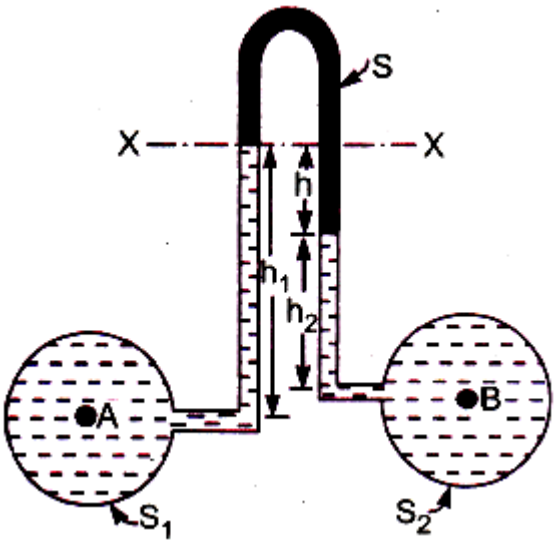

Fig. 2.10 Inverted U-tube differential manometer

Let $h_1 =$ Height of liquid in left limb below the datum line $X-X$

$h_2 =$ Height of liquid in right limb

$h =$ Difference of light liquid

$\rho_1 =$ Density of liquid at A

$\rho_2 =$ Density of liquid at B

$\rho_s =$ Density of light liquid

$p_A =$ Pressure at A

$p_B =$ Pressure at B

Pressure below datum line $X-X$ in the left limb is

$$= p_A - \rho_1 \times g \times h_1$$

Pressure below datum line $X-X$ in the right limb is

$$= p_B - \rho_2 \times g \times h_2 - \rho_s \times g \times h$$

Equating the two pressures, we have

$$p_A - \rho_1 gh_1 = p_B - \rho_2 gh_2 - \rho_s gh$$

$$p_A - p_B = \rho_1 gh_1 - \rho_2 gh_2 - \rho_s gh$$

2.8 Mechanical Pressure Gauges

2.8.1 Bourdon Tube Pressure Gauge

- This gauge is consist of elastic bent in circular arc, fixed at one end and free at other end as shown in Fig. 2.11. The fixed end is attached at the side of application of pressure and free end attached with the sector through adjustable link. The sector is in mesh with the pinion which is fixed with the pointer on the calibrated scale.
- When the pressure inside the tube is increase, tube will uncoil. So that the pointer gives a reading on the scale due to movement of the pinion through sector and free end of tube.
- **Tube material:** Brass, copper, stainless steel etc.
- **Advantages:** Simple construction, Low cost, high pressure range (up to 700 kPa), Accuracy is good
- **Disadvantage:** Susceptibility to shock and vibration, spring constant effect is major consideration.

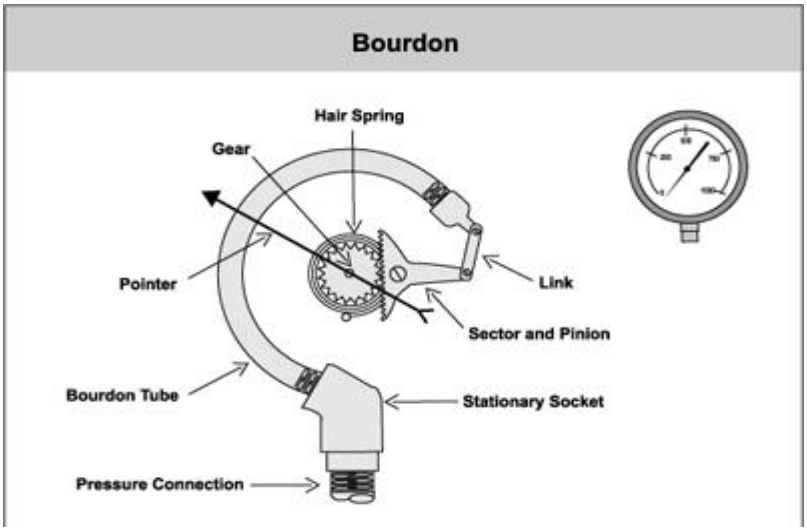

Fig.2.11. Burdon tube pressure gauge

[Note: Alloy steel Burdon tube used for measure the pressure up to 6000 bar.]

2.8.2 Diaphragm Pressure Gauge

- A diaphragm is a thin plate of circular shape clamped with its edge. When pressures are applied on the diaphragm, it is deflected. This deflection of the diaphragm is proportional to the pressure.
- Fig. 2.12 shows a construction of the diaphragm pressure gauge. If the pressure applied on the lower side of the diaphragm is greater than atmospheric pressure, the diaphragm deflected in upward. Then pointer indicates a pressure on the calibrated scale.
- **Diaphragm shape & material:** Flat or corrugated, metallic (brass, stainless steel, phosphor bronze) or Non-metallic (rubber, leather, Teflon, nylon)
- **Advantage:** Small size & medium cost, measures all types of pressure, useful also for slurry materials, good linearity, withstand with high pressure.

- **Dis-advantages:** Lack of shock and vibration, limited to relatively small pressure, repairing is much difficult.

2.8.3 Bellows Pressure Gauge

- Bellows is elastic material element, longitudinally expansible and collapsible member. As per fig. 2.13 shows pressure is applied inside the bellows gauge, it act outside of the bellows gets compressed and moves against the opposite force of the spring. This free end movement is transmitted to the pointer and gives a reading on the calibrated scale.
- **Advantage:** Simple and robust construction, medium cost, measure all types of pressure, well for low to medium pressure measurement.
- **Dis-advantages:** not suitable for high pressure, Temperature changes is affect, not suitable for dynamic pressure measurement.

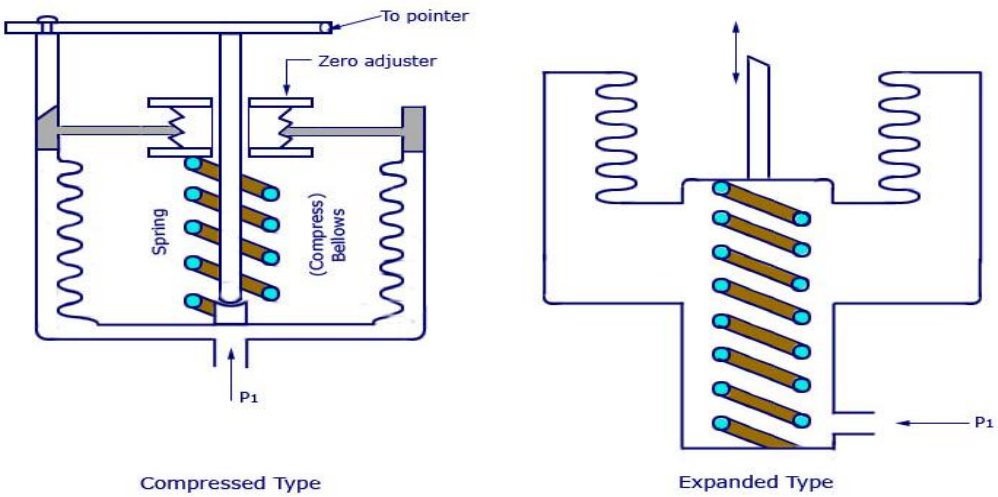

Fig.2.13. Bellows pressure gauge

[Note: Some time differential bellows pressure gauge is also used]

2.9 Solved Numerical

Ex. 1 ***[GTU; Nov-2013; 7 Marks]***

The pressure intensity at a point in a fluid is given $5N/cm^2$. Find the corresponding height of fluid when fluid is (i) water (ii) oil of sp. Gravity=0.80 and (iii) kerosene of sp. Gravity = 0.74.

Solution:

Given Data:

$$p = \frac{5N}{cm^2} = \frac{5 \times 10^4 N}{cm^2}$$

To be Calculated:

a) $h = ?$

⇨ For water,

$p = \rho g h$

$h = \frac{p}{\rho g} = 5.096\ m$ where, $\rho = 1000\ {}^{kg}/_{m^3}$

⇨ For oil,

$h = \frac{p}{\rho g} = 5.096\ m$ where, $\rho = 0.8 \times 1000\ {}^{kg}/_{m^3}$

⇨ For kerosene,

$h = \frac{p}{\rho g} = 5.096\ m$ where, $\rho = 0.74 \times 1000\ {}^{kg}/_{m^3}$

Ex. 2 A U-tube manometer contains the mercury as monomeric liquid. One end of manometer is connected to a pipe in which a fluid of sp. gravity 0.8. The level of mercury in right limb is 8 cm above the center of pipe. Calculate pressure of fluid in a pipe when the difference of mercury level in two limbs 18 cm.

Solution:

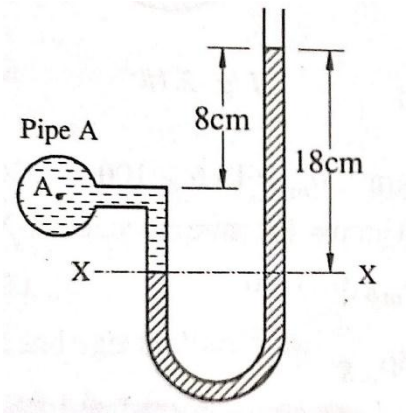

Given Data:

$\rho_A = 0.8 \times 10^3\ {}^{kg}/_{m^3}$

$\rho_m = 13.6 \times 10^3\ {}^{kg}/_{m^3}$

To be Calculated:

a) $p_A = ?$

⇨ In equilibrium condition, from fig.

$Pressure\ in\ left\ limb\ above\ X - X = Pressure\ in\ right\ limb\ below\ X - X$

$p_A + \rho_A g(0.18 - 0.08) = \rho_m g(0.18)$

$p_A = 13.6 \times 10^3 \times 9.81 \times 0.18 - 0.8 \times 10^3 \times 9.81 \times 0.1$

$p_A = 23230.08\ {}^{N}/_{m^2}$

Ex. 3 ***[GTU; Dec-2014; 7 Marks]***

A single column manometer is connected to a pipe containing a liquid of specific gravity 0.9 as shown in fig. Find the pressure in pipe if the area of the reservoir is 100 times the area of the tube for the manometer reading as shown in fig. The specific gravity of mercury is 13.6.

Solution:

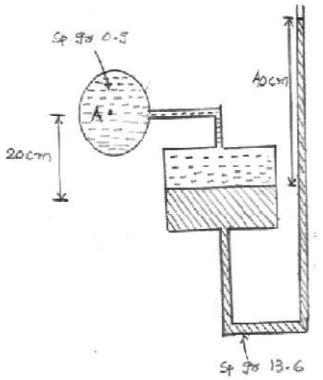

Given Data:

$\rho_A = 0.9 \times 10^3 \, {}^{kg}/_{m^3}$

$\rho_m = 13.6 \times 10^3 \, {}^{kg}/_{m^3}$

$\frac{A}{a} = 100$

$h_1 = 0.20m$

$h_2 = 0.40m$

To be Calculated:

a) $p_A = ?$

⇨ In equilibrium condition, from fig.

$Pressure\ in\ left\ limb = Pressure\ in\ right\ limb$

$p_A + \rho_A g(h_1 + \Delta h) = \rho_m g(h_2 + \Delta h)$

$p_A = 51.89 \times 10^3 \, {}^{N}/_{m^2}$

Where, $\Delta h = \frac{a}{A} h_2 = 0.004m$

Ex. 4 A U-tube differential manometer containing two pipes at A and B. The pipe A contains a liquid of specific gravity 1.5 under a pressure of $100 \, {}^{kN}/_{m^2}$. The pipe B contains oil of specific gravity 0.8 under a pressure of $175 \, {}^{kN}/_{m^2}$. The pipe A $3m$ above the pipe B. The height of liquid in in the left limb $4m$ below point A. Calculate the difference in mercury level in the differential manometer.

Solution:

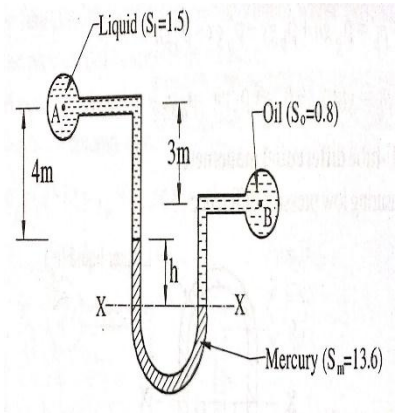

Given Data:

$\rho_A = 1.5 \times 10^3 \, {}^{kg}/_{m^3}$

$\rho_m = 13.6 \times 10^3 \, {}^{kg}/_{m^3}$

$\rho_B = 0.8 \times 10^3 \, {}^{kg}/_{m^3}$

$h_A = 4m$

$h_B = (4 + h - 3)m$

(from fig.)

$p_A = 100 \times 10^3 \, {}^{N}/_{m^2}$

To be Calculated:

a) $h = ?$

$$p_B = 175 \times 10^3 \, {}^{N}/_{m^2}$$

- In equilibrium condition, from fig.

  $Pressure\ in\ left\ limb = Pressure\ in\ right\ limb$

  $p_A + \rho_A g h_A + \rho_m g h = p_B + \rho_B g h_B$

  Using above data,

  $h = 0.191m$

3

STATIC FORCES ON SURFACE AND BUOYANCY

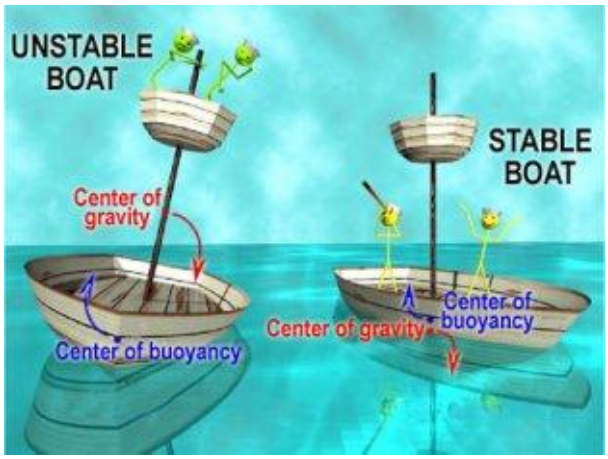

Course Contents

3.1 Total pressure and Centre of pressure
3.2 Horizontal plane surface submerged in liquid
3.3 Vertical plane surface submerged in liquid
3.4 Inclined plane surface submerged in liquid
3.5 Curved surface submerged in liquid
3.6 Table of geometric properties of different lamina
3.7 Buoyancy and Centre of Buoyancy
3.8 Meta-centre and Meta centric height
3.9 Condition for stability of submerged body
3.10 Condition for stability of floating body
3.11 Experimental method for Meta Centric height

3.1 Total Pressure and Centre of Pressure

- ***Total pressure*** is defined as the force exerted by a static fluid on a surface either plane or curved when the fluid comes in contact with the surface and this force always normal to the surface.
- ***Centre of pressure*** is defined as the point of application of the total pressure on the surface.
- There are two cases of submerged surfaces on which the total pressure force and centre of pressure is to be determined.
- The submerged surfaces may be:

1. Plane surface submerged in static fluid
   - Vertical plane surface
   - Horizontal plane surface
   - Inclined plane surface
2. Curved surface submerged in static fluid

3.2 Horizontal Plane Surface Submerged in Liquid

- Consider a plane horizontal surface immersed in a static fluid is shown in Fig. 3.1. As every point of the surface at the same depth from the free surface of the liquid, the pressure intensity will be equal on the entire surface is given by $p = \rho g h$.
- Let, $A =$ Total area of the surface

  $G =$ Centre of gravity of plane surface

  $P =$ Centre of pressure

  $\bar{h} =$ Distance of C.G of the area from free surface of liquid = h is the depth of the surface

  $h_c =$ Distance of centre of pressure from free surface of liquid = h

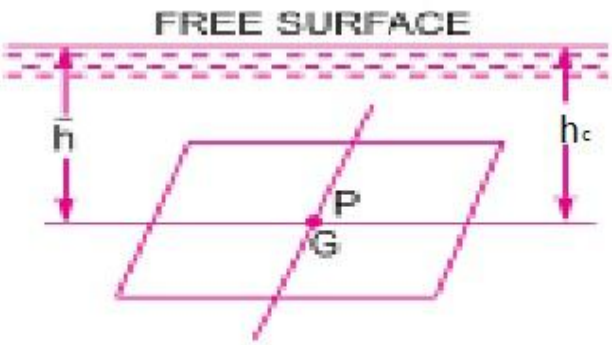

Fig. 3.1 Horizontal plane surface submerged in liquid

- Total pressure force, F on the surface,

$$F = p \times Area = \rho g h \times A$$

$$\therefore \boxed{F = \rho g A \bar{h}}$$

3.3 Vertical Plane Surface Submerged in Liquid

- Consider a plane surface of arbitrary shape immerged in a liquid as shown in Fig. 3.2.

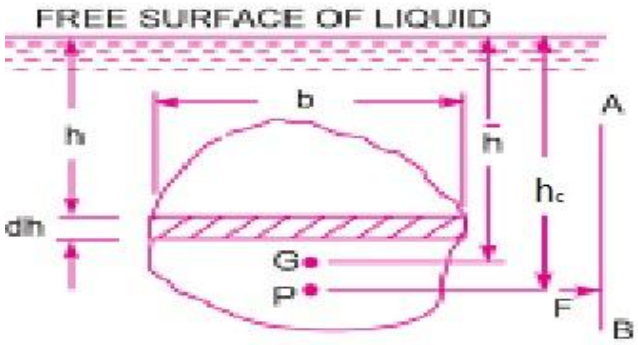

Fig. 3.2 Vertical plane surface submerged in liquid

- Let, $A =$ Total area of the surface

  $\bar{h} =$ Distance of C.G of the area from free surface of liquid

  $G =$ Centre of gravity of plane surface

  $P =$ Centre of pressure

  $h_c =$ Distance of centre of pressure from free surface of liquid

(1) Total pressure force (F)

- The total pressure on the surface may be determined by dividing the entire surface into a number of small parallel strips.
- Consider a strip of thickness dh and width b at depth of h from free surface of liquid as shown in Fig. 3.2.

  Pressure intensity on the strip, $p = \rho gh$ (Hydraustatic law)

  Area of strip, $dA = b \times dh$

  Total pressure force on strip, $dF = p \times Area = \rho gh \times b \times dh$

  Total pressure force on whole surface,

$$F = \int dF = \int \rho gh \times b \times dh = \rho g \int b \times h \times dh$$

But, $\int b \times h \times dh = \int h \times dA =$ Moment of surface area about the free surface of liquid

$=$ Area of surface $\times$ Distance of C.G from free surface $= A \times \bar{h}$

$$\therefore \boxed{F = \rho g A \bar{h}} \qquad .....(3.1)$$

(2) Position of Centre of Pressure

- Centre of pressure is calculated by using the principle of moments which states that the moment of the resultant force about an axis is equal to the sum of moments of the components about the same axis.

  The resultant force F is acting at P, at distance h_c from free surface of the liquid as shown in Fig. 3.2.
- Hence moment of the force F about free surface of liquid,

$$M_R = F \times h_c \qquad .....(3.2)$$

- Hence moment of the force dF about free surface of the liquid,

$$= dF \times h \;= \rho g h \times b \times dh \times h \quad \left(\because dF = \rho g h \times b \times dh\right)$$

- Sum of moment of all such forces about free surface of liquid is,

$$= \int \rho g h \times b \times dh \times h$$

$$= \rho g \int b h^2 dh = \rho g \int h^2 dA \qquad \left(\because bdh = dA\right)$$

But $\int h^2 dA = \int b h^2 dh$ = Moment of inertia of the surface about free surface of liquid = I_0

- Sum of moment about free surface,

$$\sum M = \rho g \int h^2 dA = \rho g I_0 \qquad \text{.....(3.3)}$$

- According to principle of moment, from equating (3.2) and (3.3), we get

$$M_R = \sum M$$

$$\therefore F \times h_c = \rho g I_0$$

$$\therefore \rho g \bar{h} A \times h_c = \rho g I_0 \qquad \left(\because F = \rho g \bar{h} A\right)$$

$$\therefore h_c = \frac{I_0}{A\bar{h}} \qquad \text{.....(3.4)}$$

- But from theorem of parallel axis, $I_0 = I_G + A\bar{h}^2$
- Substituting I_0 in equation (3.4), we get

$$\therefore h_c = \frac{I_G + A\bar{h}^2}{A\bar{h}}$$

$$\boxed{h_c = \frac{I_G}{A\bar{h}} + \bar{h}} \qquad \text{.....(3.5)}$$

3.4 Inclined Plane Surface Submerged in Liquid

- Consider an inclined plane surface of arbitrary shape immerged in a liquid such a way that the surface makes an angle θ with the free surface as shown in Fig. 3.3.

Let, $A =$ Total area of an inclined surface

$\theta =$ An angle at which the immersed surface is inclined with the liquid surface

$0-0 =$ An axis perpendicular to the plane of surface and plane of surface intersects free liquid surface at '0'

$G =$ Centre of gravity of plane surface

$P =$ Centre of pressure

$\bar{y} =$ Distance of C.G of the surface from $0-0$

$y_c =$ Distance of centre of pressure from $0-0$

$h =$ Depth of small strip from free surface of liquid

$\bar{h}$ = Depth of C.G of the area from free surface of liquid

h_c = Depth of C.G of the area from free surface of liquid

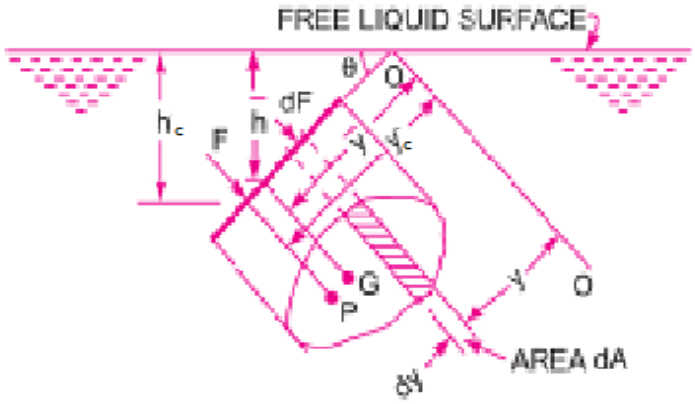

Fig. 3.3 Inclined plane surface submerged in liquid

(1) Total pressure force (F)

- Consider the small strip of area dA at a depth h from the free surface at a distance y from the axis $0-0$.

  From fig. we can write, $\boxed{\sin\theta = \frac{h}{y} = \frac{\bar{h}}{\bar{y}} = \frac{h_c}{y_c}}$

- The pressure acting on strip is,

$$p = \rho g h = \rho g y \sin\theta \qquad (\because y\sin\theta = h)$$

- The pressure force acting on strip is,

$$dF = P \times dA = \rho g y \sin\theta dA$$

- Total pressure force on whole surface is,

$$\therefore F = \int dF = \int \rho g y \sin\theta dA = \rho g \sin\theta \int y dA$$

  Where $\int y dA = \bar{y} A$ = Moment of area about axis $0-0$

$$\therefore F = \rho g \sin\theta \bar{y} A \qquad \left(\because \bar{y}\sin\theta = \bar{h}\right)$$

$$\boxed{F = \rho g \bar{h} A}$$

(2) Position of Centre of Pressure (hc) :

- The pressure force acting on strip is,

$$dF = P \times dA = \rho g y \sin\theta dA$$

- The moment of pressure force dF about axis $0-0$

$$= dF \times y = \rho g y \sin\theta dA \times y = \rho g \sin\theta y^2 dA$$

- Sum of moment of total pressure force about axis $0-0$

$$\Sigma M = \int \rho g \sin\theta y^2 dA$$

- But $\int y^2 dA = I_0$ = Moment of inertia of surface about axis $0-0$

$$\sum M = \rho g \sin\theta I_0 \qquad \text{.....(3.6)}$$

- Moment of total pressure force F about axis $0-0$ is also given by,

$$= F \times y_c \qquad \text{.....(3.7)}$$

- Equating two values in equation (3.6) and (3.7)

$$\therefore F \times y_c = \rho g \sin\theta I_0$$

$$\therefore y_c = \frac{\rho g \sin\theta I_0}{F}$$

$$\therefore \frac{h_c}{\sin\theta} = \frac{\rho g \sin\theta I_0}{\rho g \bar{h} A} \qquad \left(\because F = \rho g \bar{h} A\right) \text{ and } \left(\because y_c = \frac{h_c}{\sin\theta}\right)$$

$$\therefore h_c = \frac{\sin^2\theta}{\bar{h} A} I_0 . \qquad \text{.....(3.8)}$$

- But by the theorem of parallel axis, $I_0 = I_G + A\bar{y}^2$ $\left(\because \bar{y} = \frac{\bar{h}}{\sin\theta}\right)$ thus

$$I_0 = I_G + \frac{A\bar{h}^2}{\sin^2\theta}$$

- Substitute the value of I_0 in equation (3.8)

$$\therefore h_c = \frac{\sin^2\theta}{\bar{h} A}\left[I_G + \frac{A\bar{h}^2}{\sin^2\theta}\right]$$

$$\boxed{h_c = \frac{I_G \sin^2\theta}{A\bar{h}} + \bar{h}} \qquad \text{.....(3.9)}$$

3.5 Curved Surface Submerged in Liquid

- Consider a curved surface AB wholly submerged in static fluid as shown in Fig. 3.4. The total pressure force on the curved surface is F. Take two component of the total pressure force one is horizontal (F_x) and second is vertical (F_y).

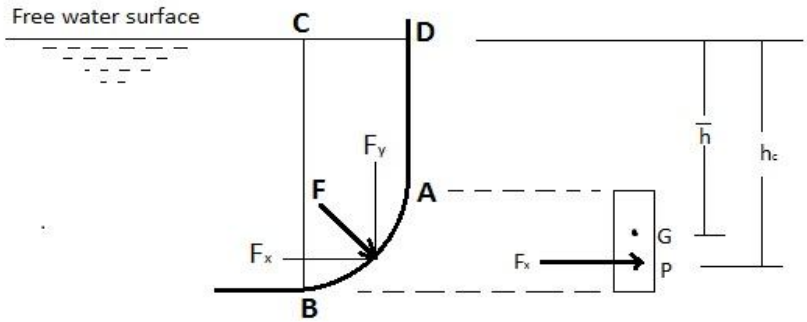

Fig. 3.4 Curved surface submerged in liquid

First component : **Horizontal component (F_x)**

- Let us consider surface AB as a vertical plane submerged in the fluid as shown in fig. 3.4. So Pressure force on the surface,

$$\therefore \boxed{F_x = \rho g A\bar{h}}$$

- And Position of F_x (centre of pressure),

$$\boxed{h_c = \frac{I_G}{A\bar{h}} + \bar{h}}$$

Second component : **Vertical component (F_y)**

- We know the weight of the fluid is gives the total force value on the horizontal plane. Hence vertical component pressure force is equal to weight of the fluid carrying by the surface AB.
- Vertical component,

$$F_y = m \times g$$

$$\therefore F_y = \rho \times V \times g$$

$$\therefore \boxed{F_y = \rho V g}$$

Where, V = Volume of fluid above the surface AB = Volume of surface ABCD

- And **Position of F_y is a position of C.G. of surface AB**
- Total pressure forces on the curved surface is,

$$\boxed{F = \sqrt{F_x^{\,2} + F_y^{\,2}}}$$

- The direction of resultant force F with horizontal is,

$$\boxed{\theta = \tan^{-1}\left(\frac{F_y}{F_x}\right)}$$

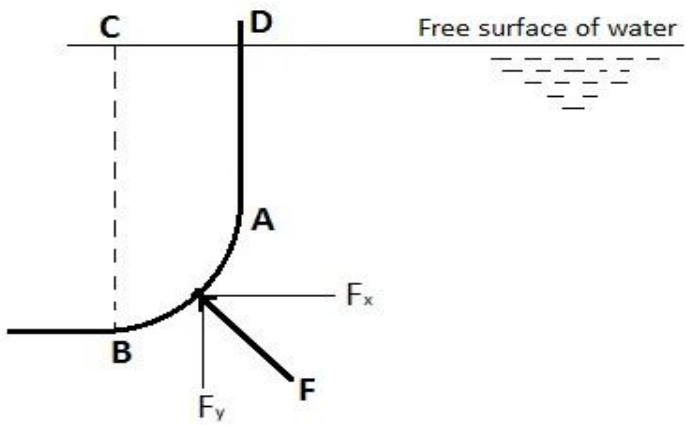

Fig. 3.5

(**Note:** In above case fluid is inside of the surface AB but sometimes fluid is act at the outside of the surface AB in this vertical component F_y is acts upward – opposite in the case of first one – figure 3.5)

3.6 Table of geometric properties of lamina

Plane	Area	C.G.	M.I. (About Centoidal axis)
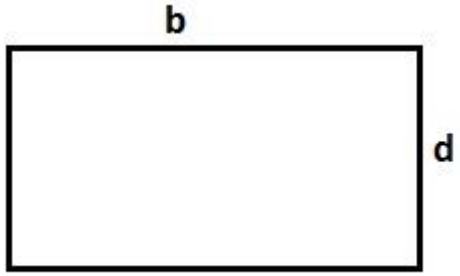	$b \times d$	$\frac{d}{2}$	$\frac{bd^3}{12}$
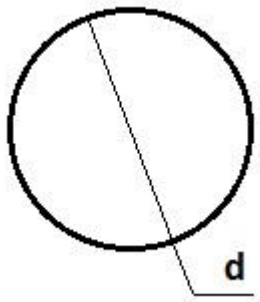	$\frac{\pi}{4}d^2$	$\frac{d}{2}$	$\frac{\pi}{64}d^4$
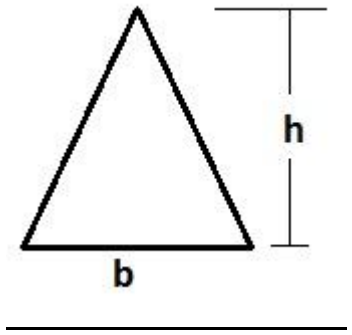	$\frac{1}{2}b \times h$	$\frac{h}{3}$ (From base)	$\frac{bh^3}{36}$

3.7 Buoyancy and Centre of Buoyancy

3.7.1. Buoyancy

– "When a body is immersed in a fluid an upward force exerted by the fluid on the body, this upward force is called the force of buoyancy. "

(**Note:** Buoyancy force = weight of the fluid displaced by the body)

3.7.2. Centre of Buoyancy

– It is defined as the point through which the force of buoyancy is supposed to be act.

(**Note:** Centre of buoyancy is a centre of gravity of the fluid displaced by body)

3.8 Meta-Centre and Meta Centric Height

Meta-centre

- "It is defined as the point about which a body starts oscillating or floating when the body is tilted by a small angle." The Meta centre may also be defined as "the point at which the line of action of the force of buoyancy will meet the normal axis of the body when the body is given a small angular displacement."
- Consider a body floating in a liquid as shown in Fig. 3.6 (a). Let the body is in equilibrium and G is the centre of gravity and B the centre of buoyancy. For equilibrium, both the points lie on the normal axis, which is vertical.

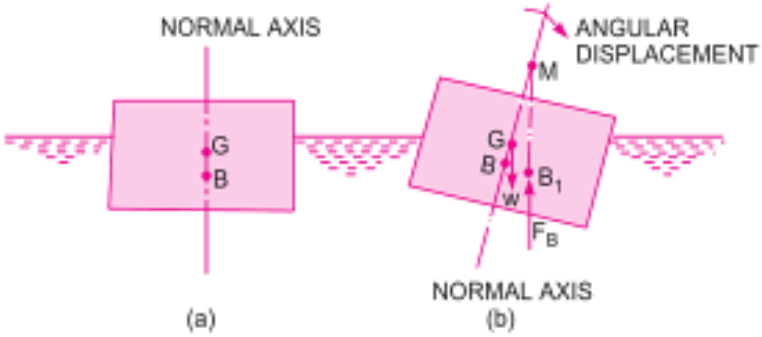

Fig. 3.6 Meta-centre

- Let the body is given a small angular displacement in the clockwise direction as shown in Fig. 4.1 (b). The centre of buoyancy, which is the centre of gravity of the displaced liquid or centre of gravity of the portion of the body submerged in liquid, will now be shifted towards right from the normal axis. Let it is at B_1. The line of action of the force of buoyancy in new position will intersect the normal axis of the body at some point say M . This point is called metacentre.

Meta Centric height

- "It is the distance (MG) between the metacentre of the floating body and the centre of gravity of the body."

3.9 Condition for Stability of Submerged Body

- The position of centre of gravity and centre of buoyancy in case of a completely sub-merged body are fixed.

(a) Stable Equilibrium

- Consider a balloon which is completely submerged in air. Let lower portion of the balloon contained heavy material, so that its centre of gravity is lower than centre of buoyancy.
- Let the weight of balloon is W acting through G vertically downwards direction while the buoyant force F_B is acting vertically up through B. For the equilibrium of the balloon $W = F_B$. Now if the balloon is given an angular displacement in the clockwise direction as shown in Fig. 3.7 (a), then W and F_B constitute a couple acting in the anti-

clockwise direction and brings the balloon in the original position. Thus the balloon in this position is in stable equilibrium.

- Thus if $W = F_B$ and point B is above G, the body is said to be in stable equilibrium.

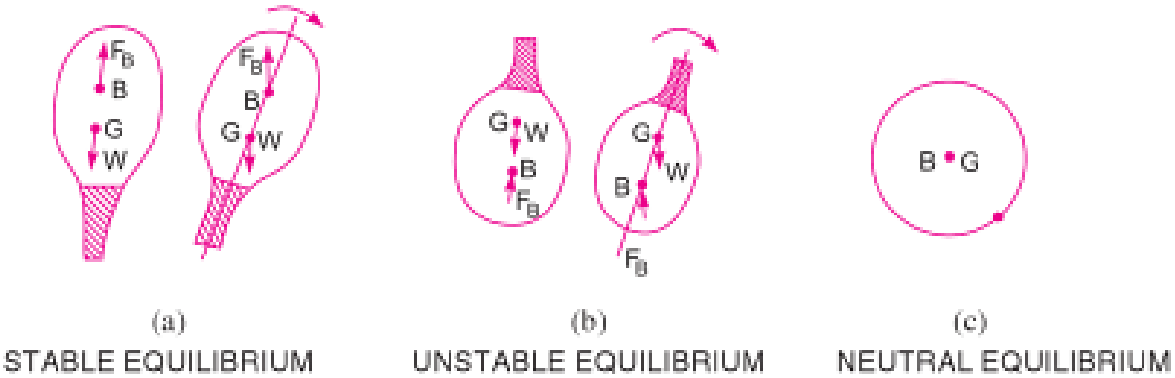

Fig. 3.7 Stabilities of sub-merged bodies

(b) Unstable Equilibrium

- If $W = F_B$ and point B is below G, the body is said to be in unstable equilibrium as shown in Fig. 3.7 (b). If the slight angular displacement given to the balloon in the clockwise direction, then W and F_B constitute a couple also acting in the clockwise direction. Thus the balloon does not return to its original position and it is in unstable equilibrium.

(b) Neutral Equilibrium

- If $W = F_B$ and point B and G are at the same point as shown in Fig. 3.7 (c), then the body is said to be in neutral equilibrium.

3.10 Condition for Stability of Floating Body

- The stability of a floating body is determined from the position of Meta-centre. In case of floating body, the weight of the body is equal to weight of the liquid displaced.

(a) Stable Equilibrium

- If the point M is above G, the floating body will be in stable equilibrium as shown in Fig. 3.8 (a). If the slight angular displacement given to the balloon in the clockwise direction, the centre of buoyancy sifted from B to B_1 such that the vertical line through b B_1 cuts at M. Then the buoyant force F_B through B_1 and weight W through G constitute a couple acting in the anticlockwise direction. Thus bringing the floating body in original position.

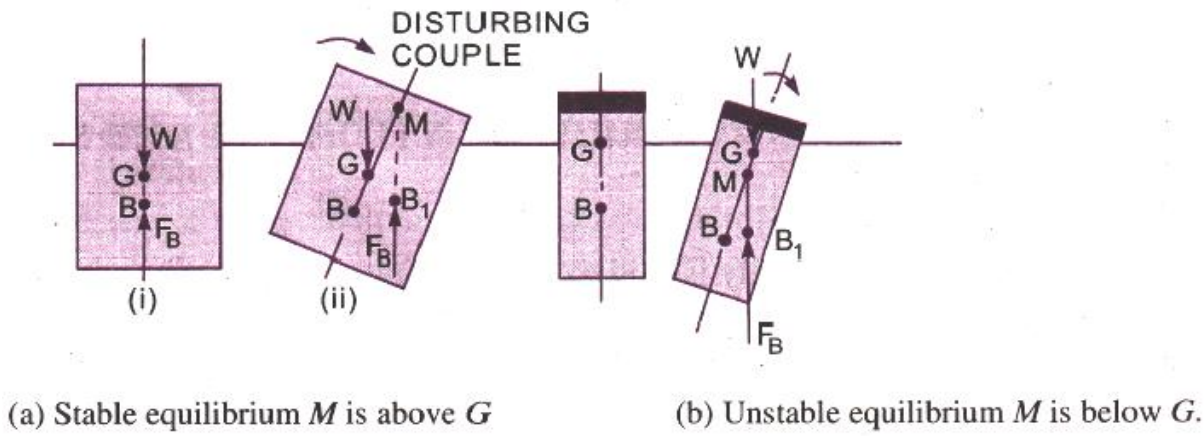

Fig.3.8 Stabilities of floating bodies

(b) Unstable Equilibrium

- If the point M is below G, the floating body will be in unstable equilibrium as shown in Fig. 3.8 (b). If the slight angular displacement given to the balloon in the clockwise direction. Then the couple due to buoyant force F_B and weight W constitute a couple also acting in the clockwise direction and thus overturning the floating body.

(c) Neutral Equilibrium

- If the point M is centre of gravity of the body, the floating body will be in neutral equilibrium.

3.11 Analytical Method for Meta Centric Height

- Consider a body floating in a liquid as shown in Fig. 4.4 (a). Let the body is in equilibrium and G is the centre of gravity and B the centre of buoyancy. For equilibrium, both the points lie on the normal axis, which is vertical.
- Let the body is given a small angular displacement in the clockwise direction. The new centre of buoyancy is at B_1. The vertical line through B_1 cuts the normal axis at M. This M is called metacentre and GM is meta-centric height.

  Consider (see fig.3.9), a small strip on the body having a length of the strip is dl and width is b.
- Disturbing couple produced by the oscillation of the strip is balanced by the anti-clockwise moment of couple produced by the strip.

  $dV =$ Volume of fluid displaced by strip,

  $g_1 =$ Centre of gravity of Δoaa_1 and

  $g_2 =$ Centre of gravity of Δobb_1

  $\theta =$ Tilted angle or oscillation angle of body

  $l =$ Total length of the body

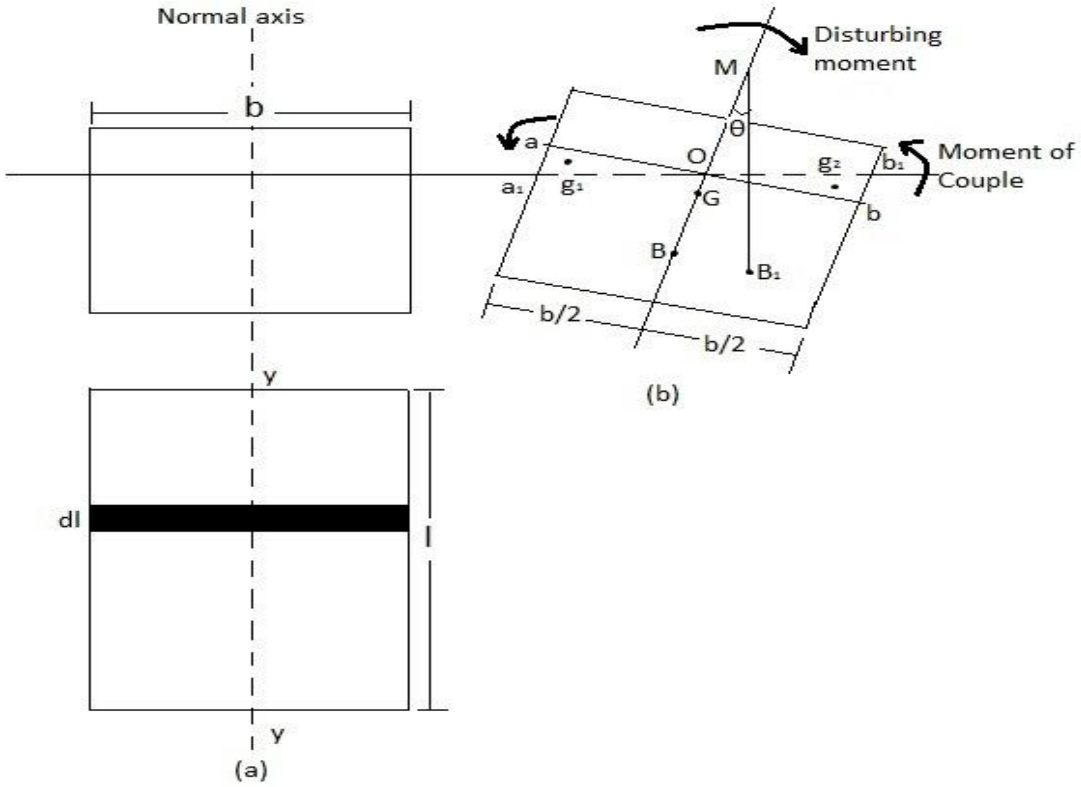

Fig. 3.9 Meta-centric height of floating body

- Now Buoyancy force on strip, $dF_B =$ weight of fluid displaced by strip $= \rho V g$
- Moment due to buoyancy force,

$$\boxed{M_B = dF_B \times BB_1 = \rho \times dV \times g \times BM \times \theta} \quad \text{..... (4.1)}$$

[For small angle, $\left(\therefore \theta = \dfrac{BB_1}{BM}\right)$]

- Moment of couple,

$$M_c = dW \times g_1 g_2 \quad \text{..... (4.2)}$$

Where, $dW =$ weight of the Δoaa_1

$$\therefore dW = \rho \times Volume \times g = \rho \times dA \times dl \times g = \rho g \times \frac{1}{2} \times aa_1 \times oa \times dl$$

In above equation, $oa = \dfrac{b}{2}$ and $\theta = \dfrac{aa_1}{oa} = \dfrac{aa_1}{\frac{b}{2}}$ (From fig. 4.4)

$$\therefore dW = \rho g \times \frac{1}{2} \times \frac{b}{2} \theta \times \frac{b}{2} \times dl \quad \text{..... (4.3)}$$

Distance $g_1 g_2 = g_1 o + o g_2 = \dfrac{2}{3} \times \dfrac{b}{2} + \dfrac{2}{3} \times \dfrac{b}{2} = \dfrac{2}{3} b$ ..... (4.4)

From equation (4.2), (4.3) and (4.4) we get moment of couple,

$$\therefore M_c = \rho g \times \frac{1}{2} \times \frac{b}{2}\theta \times \frac{b}{2} \times dl \times \frac{2}{3}b$$

$$\therefore \boxed{M_c = \rho g \times \frac{1}{12} \times \theta \times dl \times b^3} \quad \text{..... (4.5)}$$

- According to principle of moment, moment due to buoyancy force and moment of couple are equal. So from equation (4.1) and (4.5), we get,

$$M_B = M_c$$

$$\therefore \rho \times dV \times g \times BM \times \theta = \rho g \times \frac{1}{12} \times \theta \times dl \times b^3$$

$$\therefore dV \times BM = \frac{dl \times b^3}{12} = dI$$

- Taking both side integration,

$$\therefore BM \int dV = \int dI$$

$$\therefore \boxed{BM = \frac{I}{V}} \quad \text{..... (4.6)}$$

Where, $I =$ M.I. of body about Y-Y axis,

$V =$ Volume of fluid displaced by body

- From figure, $BM = BG + GM$, so equation (4.6) gives a metacentric height,

So, Metacentric Height,

$$\boxed{GM = \frac{I}{V} - BG} \quad \text{..... (4.7)}$$

3.12 Experimental Method for Meta Centric Height

- The meta-centric height of the floating vessel can be determined, provided that we know centre of gravity of the floating vessel. Let w_1 is known weight placed over the centre of the vessel as shown in Fig. 3.10 (a).

Let ,

$W =$ Weight of the vessel including w_1

$G =$ Centre of gravity of the vessel

$B =$ Centre of buoyancy of the vessel

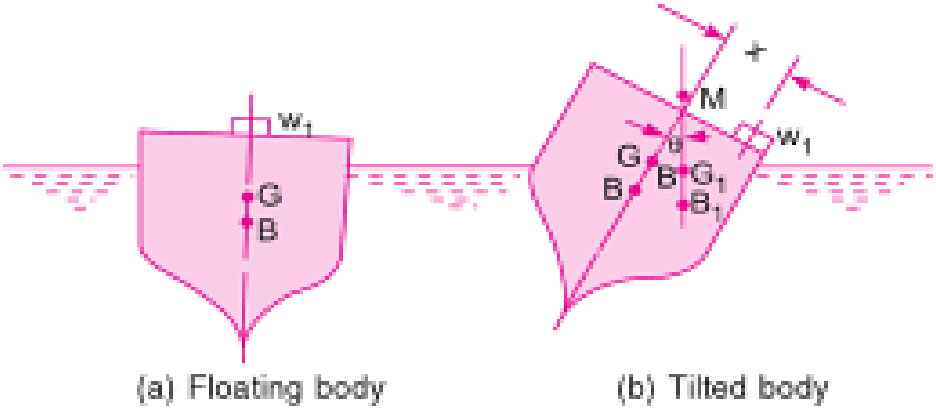

Fig.3.10 Meta centric height of the floating body

- The weight w_1 is moved across the vessel towards right through a distance x as shown in Fig. 4.5. The vessel will be tilted.
- The angle θ is measured by means of a plumbline and a protractor attached on the vessel.
- The new centre of gravity will shifted to G_1 as the weight has been moved towards the right. Also the centre of buoyancy will change to B_1 as the vessel has tilted. Under equilibrium, the moment cause by movement of the load w_1 through a distance x must be equal to the moment caused by the shift of the centre of gravity from G to G_1. Thus

  The moment due to whole weight $W = GG_1 \times W = W \times GM \tan\theta$

  The moment due to movement of $w_1 = w_1 \times x$

  In equilibrium condition, $w_1 x = W \times GM \tan\theta$

$$\therefore \boxed{GM = \frac{w_1 x}{W \tan\theta}}$$

4

MOTION OF FLUID PARTICLES AND STREAMS

Course Contents

4.1. Introduction

4.2. Methods of describing the fluid motion

4.3. Types of fluid flow

4.4. Rate of flow and Continuity equation

4.5. Continuity equation in three dimensional Cartesian co-ordinates

4.6. Velocity and Acceleration

4.7. Solved Numerical

4.1 Introduction

- Kinematics is defined as that branch of science which deals with motion of fluid particles without considering the forces causing the motion. The velocity at any point in a flow field at any time is studied in this branch of fluid mechanics. Once the velocity is known then the pressure distribution and hence forces acting on the fluid can be determined.

4.2 Methods of Describing the Fluid Motion

The fluid motion is described by two methods. (1) Langrangian method (2) Eulerian Method

(1) Langrangian Method

In Langrangian method a single fluid particle is followed during its motion and its velocity, acceleration, density etc., are described.

(2) Eulerian Method

In Eulerian Method, the velocity, acceleration, density etc., are described at point in flow field.

4.3 Types of Fluid Flow

The fluid flow is classified as below:

1. Steady and unsteady flow
2. Uniform and non-uniform flow
3. Laminar and turbulent flow
4. Compressible flow and incompressible flow
5. Rotational and irrotational flow
6. One, two and three dimensional flow

4.3.1 Steady and Unsteady Flow

- Steady flow is defined as that type of in which the fluid characteristics at a point do not change with time.

  Mathematically,

$$\left(\frac{\partial V}{\partial t}\right)_{x_0,y_0,z_0}=0,\left(\frac{\partial p}{\partial t}\right)_{x_0,y_0,z_0}=0,\left(\frac{\partial \rho}{\partial t}\right)_{x_0,y_0,z_0}=0$$

  Where x_0, y_0, z_0 is the fixed point in fluid field.

- Unsteady flow is defined as that type of in which the fluid characteristics at a point changes with respect to with time.

  Mathematically,

$$\left(\frac{\partial V}{\partial t}\right)_{x_0,y_0,z_0}\neq 0,\left(\frac{\partial p}{\partial t}\right)_{x_0,y_0,z_0}\neq 0,\left(\frac{\partial \rho}{\partial t}\right)_{x_0,y_0,z_0}\neq 0$$

4.3.2 Uniform and Non-uniform Flow

- Uniform flow is defined as that type of in which the velocity at any given time does not change with space (length of direction of flow).

  Mathematically,

$$\left(\frac{\partial V}{\partial s}\right)_{t=\text{constant}}=0$$

- Non-uniform flow is defined as that type of in which the velocity at any given time changes change with space (length of direction of flow).
  Mathematically,

$$\left(\frac{\partial V}{\partial s}\right)_{t=\text{constant}} \neq 0$$

4.3.3 Laminar and Turbulent Flow

- Laminar flow is defined as that type of in which the fluid particles moves along well defined paths or stream line and all the streamlines are straight and parallel. Thus the particles move in laminas or layers gliding smoothly over the adjacent layer. This type of flow is also called stream line flow or viscous flow.
- Turbulent flow is defined as that type of in which the fluid particles moves in zig-zag way. Thus eddies formation takes place which are responsible for high energy loss. For pipe flow, the type of flow can be determined by Reynolds number (Re)
- Reynolds number is given by,

$$\text{Re} = \frac{\rho V D}{\mu}$$

where $\rho =$ Density of fluid
$V =$ Velocity of fluid
$D =$ Diameter of pipe
$\mu =$ Dynamic viscosity of fluid

If the Reynolds number is less than 2000, the flow is called laminar.
If the Reynolds number is more than 2000, the flow is called turbulent.
If the Reynolds number lies between 2000 and 4000 the flow is called transition flow.

4.3.4 Compressible and Incompressible Flow

- Compressible flow is defined as that type of in which the density of fluid changes from point to point or density is not constant for the fluid. i.e $\rho \neq$ Constant (for gases).
- Incompressible flow is defined as that type of in which the density of fluid is constant for the fluid. i.e $\rho =$ Constant (for liquids).

4.3.5 Rotational and Irrotational Flow

- Rotational flow is defined as that type of in which the fluid particles while flowing along stream lines, also rotates about their own axis.
- Irrotational flow is defined as that type of in which the fluid particles while flowing along stream lines, do not also rotates about their own axis.

4.3.6 One, Two and Three Dimensional Flow

- One dimensional flow is defined as that type of in which the fluid parameter such as velocity is function of time and one space co-ordinate only say x. For steady one dimensional flow, the velocity is a function of one space co-ordinate only. The variation of velocities in other two mutually perpendicular directions is assumed negligible.
  Mathematically,

$$u = f(x),\ v = 0 \text{ and } w = 0$$

- Two dimensional flow is defined as that type of in which the fluid parameter such as velocity is function of time and two rectangular space co-ordinate only say x and y. For steady two dimensional flow, the velocity is a function of two space co-ordinate only. The variation of velocity in third direction is negligible.
  Mathematically,
  $$u = f_1(x, y),\ v = f_2(x, y) \text{ and } w = 0$$

- Three dimensional flow is defined as that type of in which the fluid parameter such as velocity is function of time and three mutually perpendicular directions say x, y and z. For steady three dimensional flow, the velocity is a function of three space co-ordinate.
  Mathematically,
  $$u = f_1(x, y, z),\ v = f_2(x, y, z),\ \mathrm{w} = f_3(x, y, z)$$

4.4 Rate of Flow and Continuity Equation

- Rate of flow or discharge is defined as the quantity of fluid flowing per second through a section of a pipe.
- The equation based on the principle of conservation of mass is called continuity equation. Thus for fluid flowing through the pipe at all the cross sections, the quantity of fluid per second is constant.

Consider two cross section of pipe as shown in Fig. 4.1

Let $\rho_1 =$ Density at section 1-1

$A_1 =$ Area of pipe at section 1-1

$V_1 =$ Average velocity at cross section 1-1

And ρ_2, V_2, A_2 are corresponding values at section 2-2.

Then rate of flow at section 1-1 $= \rho_1 A_1 V_1$

Rate of flow at section 2-2 $= \rho_1 A_1 V_1$

According to law of conservation of mass,

Rate of flow at section 1-1 = Rate of flow at section 2-2

$$\rho_1 A_1 V_1 = \rho_2 A_2 V_2 \quad \text{.....(4.1)}$$

Above equation (4.2) is applicable to compressible as well as incompressible fluid and is known as Continuity equation.

If the fluid is incompressible then $\rho_1 = \rho_2$ and continuity equation reduced to

$$A_1 V_1 = A_2 V_2 \quad \text{.....(4.2)}$$

4.5 Continuity Equation in Three Dimensional Cartesian Co-Ordinates

- Consider a fluid element of lengths dx, dy and dz in the direction of x, y and z. Let u, v and w are the inlet velocity components in x, y and z directions respectively. Mass of fluid entering the face ABCD per second
  $$= \rho \times \text{ Velocity in } x \text{ direction} \times \text{ Area of ABCD}$$

$$= \rho \times u \times (dy \times dz)$$

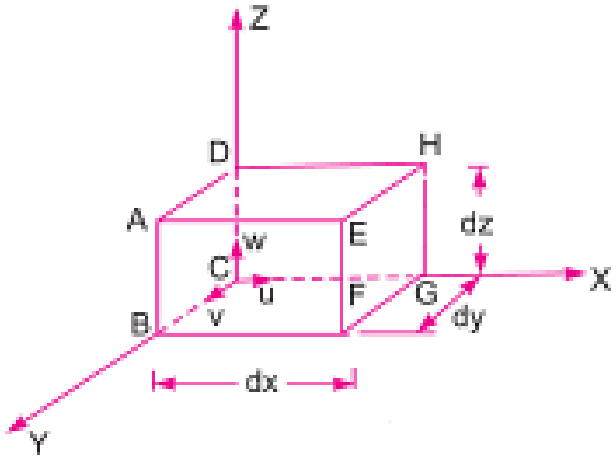

Fig. 4.1 Fluid element

Then the mass of fluid leaving the face EFGH per second $= \rho u dydz + \frac{\partial}{\partial x}(\rho u dydz)dx$

Gain of mass in x direction

$$= \text{Mass through ABCD- Mass through EFGH per second}$$

$$= \rho u dydz - \rho u dydz - \frac{\partial}{\partial x}(\rho u dydz)dx$$

$$= -\frac{\partial}{\partial x}(\rho u)dxdydz$$

Similarly net gain of mass in y direction

$$= -\frac{\partial}{\partial y}(\rho v)dxdydz$$

And in net gain of mass in z direction

$$= -\frac{\partial}{\partial z}(\rho w)dxdydz$$

Total net gain of masses

$$= -\left[\frac{\partial}{\partial x}(\rho u) + \frac{\partial}{\partial y}(\rho v) + \frac{\partial}{\partial z}(\rho w)\right]dxdydz \quad \text{.....(4.3)}$$

Since the mass is neither created nor destroyed in the fluid element, the net increase of mass per unit time in the fluid element must be equal to the rate of increase of mass of fluid in the element.

Rate of increase of mass with time is

$$\frac{\partial m}{\partial t} = \frac{\partial \rho}{\partial t}dxdydz \quad \text{.....(4.4)}$$

Equating equations (4.3) and (4.4)

$$-\left[\frac{\partial}{\partial x}(\rho u) + \frac{\partial}{\partial y}(\rho v) + \frac{\partial}{\partial z}(\rho w)\right]dxdydz = \frac{\partial \rho}{\partial t}dxdydz$$

$$\frac{\partial \rho}{\partial t}+\frac{\partial}{\partial x}(\rho u)+\frac{\partial}{\partial y}(\rho v)+\frac{\partial}{\partial z}(\rho w)=0 \quad \text{.....(4.5)}$$

Above equation (4.5) is applicable to (i) steady and unsteady flow, (ii) uniform and non-uniform flow, (iii) compressible and incompressible flow.

For steady flow, $\frac{\partial \rho}{\partial t}=0$ and for incompressible flow ρ is constant then above equation becomes,

$$\frac{\partial u}{\partial x}+\frac{\partial v}{\partial y}+\frac{\partial w}{\partial z}=0 \quad \text{.....(4.6)}$$

Above equation (4.6) is the continuity equation in three dimensions. For a two dimensional flow, the component $w=0$ and hence continuity equation becomes,

$$\frac{\partial u}{\partial x}+\frac{\partial v}{\partial y}=0 \quad \text{.....(4.7)}$$

4.6 Velocity and Acceleration

- Let V is the resultant velocity at any point in a fluid flow. Let u, v and w are its components in x, y and z directions. The velocity components are the functions of space co-ordinates and time.

Mathematically the velocity components are given as,

$$u=f_1(x,y,z,t)$$
$$v=f_2(x,y,z,t)$$
$$w=f_3(x,y,z,t)$$

And resultant velocity, $V=ui+vj+wk=\sqrt{u^2+v^2+w^2}$

Let a_x, a_y and a_z are the total acceleration in x, y and z directions respectively. Then by the chain rule of differentiation, we have

$$a_x=\frac{du}{dt}=\frac{\partial u}{\partial x}\frac{dx}{dt}+\frac{\partial u}{\partial y}\frac{dy}{dt}+\frac{\partial u}{\partial z}\frac{dz}{dt}+\frac{\partial u}{\partial t}$$

But $\frac{dx}{dt}=u, \frac{dy}{dt}=v, \frac{dz}{dt}=w$

$$a_x=\frac{du}{dt}=u\frac{\partial u}{\partial x}+v\frac{\partial u}{\partial y}+w\frac{\partial u}{\partial z}+\frac{\partial u}{\partial t}$$
$$a_y=\frac{dv}{dt}=u\frac{\partial v}{\partial x}+v\frac{\partial v}{\partial y}+w\frac{\partial v}{\partial z}+\frac{\partial v}{\partial t} \quad \text{.....(4.8)}$$
$$a_z=\frac{dw}{dt}=u\frac{\partial w}{\partial x}+v\frac{\partial w}{\partial y}+w\frac{\partial w}{\partial z}+\frac{\partial w}{\partial t}$$

For steady flow, $\frac{\partial V}{\partial t}=0$ where V is the resultant velocity

Thus $\frac{\partial u}{\partial t}=0, \frac{\partial v}{\partial t}=0, \frac{\partial w}{\partial t}=0$

Hence acceleration in x, y and z directions becomes,

$$a_x = \frac{du}{dt} = u\frac{\partial u}{\partial x} + v\frac{\partial u}{\partial y} + w\frac{\partial u}{\partial z}$$

$$a_y = \frac{dv}{dt} = u\frac{\partial v}{\partial x} + v\frac{\partial v}{\partial y} + w\frac{\partial v}{\partial z}$$

$$a_z = \frac{dw}{dt} = u\frac{\partial w}{\partial x} + v\frac{\partial w}{\partial y} + w\frac{\partial w}{\partial z}$$

Acceleration vector $A = a_x i + a_y j + a_z k = \sqrt{a_x^{\ 2} + a_y^{\ 2} + a_z^{\ 2}}$

4.6.1 Local acceleration and Convective acceleration

- **Local acceleration** is defined as the rate of increase of velocity with respect to time at a given point in a flow field. In the equation (4.8) the expression $\frac{\partial u}{\partial t}, \frac{\partial v}{\partial t}$ or $\frac{\partial w}{\partial t}$ is known as local acceleration.
- **Convective acceleration** is defined as the rate of change of velocity due to the change of position of fluid particles in a fluid flow. The $\frac{\partial u}{\partial t}, \frac{\partial v}{\partial t}$ or $\frac{\partial w}{\partial t}$ in equation (5.8) are known as convective acceleration.

4.7 Solved Numerical

1. The velocity vector in a fluid flow is given by, $V = 4x^3 i - 10x^2 yj + 2tk$

   Find the velocity and acceleration of a fluid particle at (2, 1, 3) at time t = 1.

   Solution:

   The velocity components u, v and w are $u = 4x^3, v = -10x^2, w = 2t$

   For the point $(2,1,3)$, we have $x = 2, y = 1$ and $z = 3$ at time $t = 1$

   Hence velocity components at $(2,1,3)$ are

$$u = 4 \times (2)^3 = 32 \text{ units}$$

$$v = -10(2)^2 \times 1 = -40 \text{ units}$$

$$w = 2 \times 1 = 2 \text{ units}$$

$\therefore$ Velocity vector V at $(2,1,3) = 32i - 40j + 2k$

$$\text{Resultant velocity} = \sqrt{u^2 + v^2 + w^2} = \sqrt{32^2 + (-40)^2 + 2^2} = 51.26 \text{ units}$$

Acceleration is given by,

$$a_x = u\frac{\partial u}{\partial x} + v\frac{\partial u}{\partial y} + w\frac{\partial u}{\partial z} + \frac{\partial u}{\partial t}$$

$$a_y = u\frac{\partial v}{\partial x} + v\frac{\partial v}{\partial y} + w\frac{\partial v}{\partial z} + \frac{\partial v}{\partial t}$$

$$a_z = u\frac{\partial w}{\partial x} + v\frac{\partial w}{\partial y} + w\frac{\partial w}{\partial z} + \frac{\partial w}{\partial t}$$

Now from velocity components, we have

$$\frac{\partial u}{\partial x} = 12x^2, \frac{\partial u}{\partial y} = 0, \frac{\partial u}{\partial z} = 0 \text{ and } \frac{\partial u}{\partial t} = 0$$

$$\frac{\partial v}{\partial x} = -20xy, \frac{\partial v}{\partial y} = -10x^2, \frac{\partial v}{\partial z} = 0, \frac{\partial v}{\partial t} = 0$$

$$\frac{\partial w}{\partial x} = 0, \frac{\partial w}{\partial y} = 0, \frac{\partial w}{\partial z} = 0 \text{ and } \frac{\partial w}{\partial t} = 2.1$$

Substituting the values, the acceleration components at $(2,1,3)$ at time $t = 1$ are

$$a_x = 4x^3(12x^2) + (-10x^2 y)(0) + 2t \times (0) + 0$$

$$= 48x^5 = 48 \times (2)^5 = 1536 \text{ units}$$

$$a_y = 4x^3(-20xy) + (-10x^2 y)(-10x^2) + 2t \times (0)$$

$$= -80x^4 y + 100x^4 y$$

$$= -80(2)^4(1) + 100(2)^4 \times 1$$

$$= 320 \text{ units}$$

$$a_z = 4x^3(0) + (-10x^2 y)(0) + 2t \times (0) + 2.1 = 2 \text{ units}$$

Acceleration is $A = a_x i + a_y j + a_z k = 1536i + 320j + 2k$

Resultant $A = \sqrt{(1536)^2 + (320)^2 + (2)^2} = 1568.9$ units

2. The velocity potential function (ϕ) is given by an expression $\phi = \frac{-xy^3}{3} - x^2 + \frac{x^3 y}{3} + y^2$

   (i) Find the velocity components in x and y direction.

   (ii) Show that ϕ represents a possible case of flow

Solution:

Given: $\phi = \frac{-xy^3}{3} - x^2 + \frac{x^3 y}{3} + y^2$

Partial derivatives of ϕ w.r.t x and y are

$$\frac{\partial \phi}{\partial x} = -\frac{y^3}{3} - 2x + \frac{3x^2 y}{3}$$

and $$\frac{\partial \phi}{\partial x} = -\frac{3xy^2}{3} - \frac{x^3}{3} + 2y$$

(i) The velocity components u and v are given by

$$u = -\frac{\partial \phi}{\partial x} = -\left[-\frac{y^3}{3} - 2x + \frac{3x^2 y}{3}\right] \text{.....(1)}$$

$$u = \frac{y^3}{3} + 2x - x^2 y$$

$$u = \frac{y^3}{3} + 2x - x^2 y$$

$$v = -\frac{\partial \phi}{\partial y} = \left[-\frac{3xy^2}{3} - \frac{x^3}{3} + 2y\right] = \frac{3xy^2}{3} - \frac{x^3}{3} - 2y \text{.....(2)}$$

$$v = xy^2 - \frac{x^3}{3} - 2y$$

(ii) The given value of ϕ represents a possible case of flow if it satisfies the Laplace equation

$$\frac{\partial^2 \phi}{\partial x^2} + \frac{\partial^2 \phi}{\partial y^2} = 0$$

From equations (1) and (2), we have

$$\frac{\partial \phi}{\partial x} = -\frac{y^3}{3} - 2x + x^2 y$$

$$\frac{\partial^2 \phi}{\partial x^2} = -2 + 2xy$$

$$\frac{\partial \phi}{\partial y} = -xy^2 - \frac{x^3}{3} - 2$$

$$\frac{\partial^2 \phi}{\partial y^2} = -2xy + 2$$

$$\frac{\partial^2\phi}{\partial x^2}+\frac{\partial^2\phi}{\partial y^2}=\left(-2+2xy\right)+\left(-2xy+2\right)=0$$

$\therefore$ Laplace equation satisfied and hence ϕ represent a possible case of flow.

3. The velocity components in two dimensional flow field for an incompressible fluid are as follows: $u=\frac{y^3}{3}+2x-x^2y$ and $v=xy^2--2y-\frac{x^3}{3}$. Obtain an expression for the stream function ψ.

Solution:

Given: $u=\frac{y^3}{3}+2x-x^2y$ and $v=xy^2-2y-\frac{x^3}{3}$

The velocity components in terms of stream functions are

$$\frac{\partial\psi}{\partial x}=v=xy^2-2y-\frac{x^3}{3}\text{.....(i)}$$

$$\frac{\partial\psi}{\partial y}=-u=-\frac{y^3}{3}-2x+x^2y\text{.....(ii)}$$

Integrating (i) w.r.t x we get

$$\psi=\int\left(xy^2-2y-\frac{x^3}{3}\right)dx$$

$$=\frac{x^2y^2}{2}-2xy-\frac{x^4}{4\times3}+k\text{.....(iii)}$$

where k is a constant of integration which is indepent of x but can be function of y.

Differentiating equation (iii) w.r.t y we get,

$$\frac{\partial\psi}{\partial y}=-\frac{2x^2y}{2}-2x+\frac{\partial k}{\partial y}=x^2y-2x+\frac{\partial k}{\partial y}$$

But from equation (ii)

$$\frac{\partial\psi}{\partial y}=-u=-\frac{y^3}{3}-2x+x^2y$$

Comparing the value of $\frac{\partial\psi}{\partial y}$, we get

$$\frac{\partial\psi}{\partial y}=x^2y-2x+\frac{\partial k}{\partial y}=-\frac{y^3}{3}-2x+x^2y$$

$$\frac{\partial k}{\partial y}=-\frac{y^3}{3}$$

Integrating we get,

$$k=\int\left(-\frac{y^3}{3}\right)dy=\frac{-y^4}{4\times3}=\frac{-y^4}{12}$$

Substitute this value in (iii), we get

$$\psi=\frac{x^2y^2}{2}-2xy-\frac{x^4}{12}-\frac{y^4}{12}$$

4. The velocity components in two dimensional flow field are: $u = \frac{y^3}{3} + 2x - x^2y$ and $v = xy^2 - -2y - \frac{x^3}{3}$. Show that this component represents a possible case of an irrotational flow.

Solution:

Given: $u = \frac{y^3}{3} + 2x - x^2y$

$$\frac{\partial u}{\partial x} = 2 - 2xy$$

$$\frac{\partial u}{\partial y} = \frac{3y^2}{3} - x^2 = y^2 - x^2$$

Also $v = xy^2 - 2y - \frac{x^3}{3}$

$$\frac{\partial v}{\partial y} = 2xy - 2$$

$$\frac{\partial v}{\partial x} = y^2 - \frac{3x^2}{3} = y^2 - x^2$$

(i) For two dimensional flow, continuity equation is $\frac{\partial u}{\partial x} + \frac{\partial v}{\partial y} = 0$

Substitute the value of $\frac{\partial u}{\partial x}$ and $\frac{\partial u}{\partial y}$, we get

$$\frac{\partial u}{\partial x} + \frac{\partial u}{\partial y} = 2 - 2xy + 2xy - 2 = 0$$

$\therefore$ It is a possible case of fluid flow

(ii) Rotation, $\omega_z = \frac{1}{2}\left(\frac{\partial v}{\partial x} - \frac{\partial u}{\partial y}\right) = \frac{1}{2}\left[\left(y^2 - x^2\right) - \left(y^2 - x^2\right)\right] = 0$

$\therefore$ Rotation is zero, which means it is case of irrotational flow.

5. An open circular cylinder of 15 cm diameter and 100 cm long contains water up to a height of 70 cm. Find the maximum speed at which the cylinder is to be rotated about its vertical axis depth becomes zero.

Solution:

Given:

Diameter of cylinder = 15 cm, $R = \frac{15}{2} = 7.5$ cm

Lenght of cylinder = 100 cm

Initial height of water = 70 cm

When axis depth is zero, teh depth of paraboloid = 100 cm

Using the relation, $Z = \frac{\omega^2 R^2}{2g}$

$$100 = \frac{\omega^2 \times 7.5^2}{2 \times 9.81}$$

$$\omega = 59.05 \text{ rad/s}$$

Speed N is given by $\omega = \frac{2\pi N}{60}$

$$N = \frac{60 \times \omega}{2\pi} = 563.88 \text{ rpm}$$

5

ENERGY EQUATION AND ITS APPLICATION

Course Contents

5.1. Momentum and fluid flow
5.2 Momentum equation for two and three dimensional flow along a stream line
5.3 Momentum correction factor
5.4 Kinetic energy correction factor
5.5 Euler's equation of motion along a stream line
5.6 Mechanical energy of a flowing fluid- Bernoulli's theorem
5.7 Venturimeter
5.8 Pipe orifices
5.9 Rotameter
5.10 Pitot tube
5.11 Theory of small orifice
5.12 Hydraulic co-efficients
5.13 Theory of large orifice
5.14 Elementary theory of notches and weirs
5.15 List of formulas
5.16 Solved Numerical

5.1 Momentum and Fluid Flow

- The momentum of a particle is defined as the product of its mass and its velocity V.

$$\therefore \text{ Momentum} = m \cdot V$$

- The particles of fluid stream have momentum. If the velocity of stream is changed in magnitude or direction, there will be corresponding change in the momentum of the fluid particles.
- According to Newton's second law, the net force acting on the fluid mass is equal to the change in momentum of flow per unit time in that direction.
- Consider control volume ABCD as shown in fig 5.1. There is no storage within the control volume, the mass flow across the control volume is

$$\dot{m} = \rho_1 A_1 V_1 = \rho_2 A_2 V_2 \qquad \cdots\cdots\cdots(1)$$

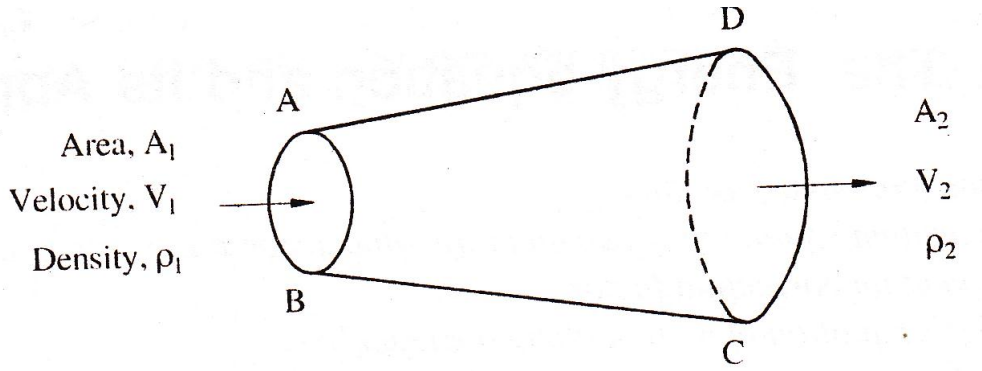

Fig. 5.1 Momentum in a flowing fluid

- The rate at which momentum enters the control volume across AB is

$$\dot{m}V_1 = \rho_1 A_1 V_1 V_1$$

- Similarly the rate at which momentum leaves control volume across CD is

$$\dot{m}V_2 = \rho_2 A_2 V_2 V_2$$

- Thus the rate of change of momentum across the control volume is

$$= \rho_2 A_2 V_2 V_2 - \rho_1 A_1 V_1 V_1$$
$$= \rho_1 A_1 V_1 (V_2 - V_1) \qquad (\because \text{From the equation } 1)$$
$$= \dot{m}(V_2 - V_1) = \text{Mass flow per unit time} \times \text{change of velocity}$$

- According to Newton's Second law the increase of momentum per unit time in the direction of the motion will be caused by a force F

$$\therefore F = \dot{m}(V_2 - V_1) = \rho Q (V_2 - V_1)$$

- This is the resultant force acting on the fluid element ABCD in the direction of the motion.

5.2 Momentum equation for two and three dimensional flow along a stream line

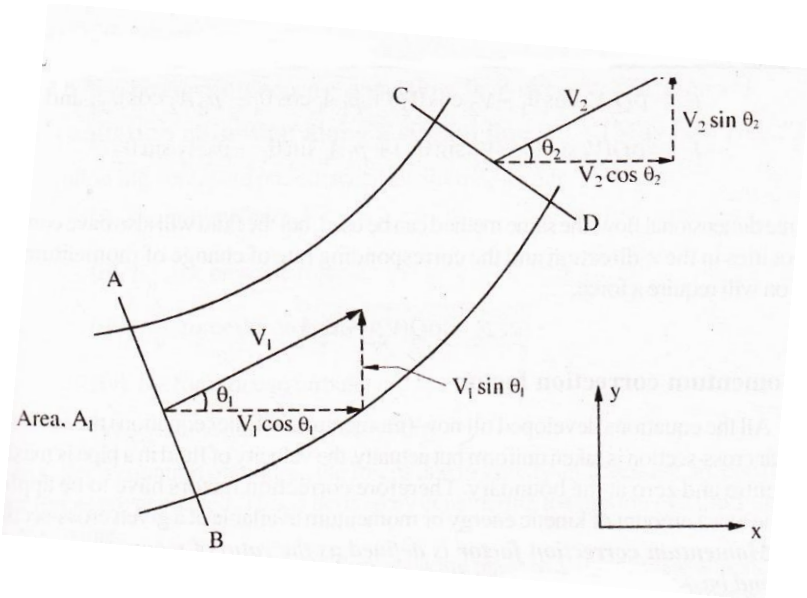

Fig. 5.2 Momentum equation for two dimensional flow

- Fig. 5.2 shows a two dimensional problem in which V_1 makes an angle θ_1 with the x-axis, while V_2 makes a corresponding angle θ_2. The force F and velocity vectors V_1 and V_2 are all vector quantity and can be resolved into components in the direction of co-ordinates x and y.
- The components of V_1 and V_2 along x-axis are

$$V_1 \cos\theta_1 \quad \text{and} \quad V_2 \cos\theta_2$$

- Components of V_1 and V_2 along y-axis are

$$V_1 \sin\theta_1 \quad \text{and} \quad V_2 \sin\theta_2$$

- So components of force F along x-axis and y-axis are:

$$\begin{aligned} F_x &= \text{Rate of change of momentum of fluid in x} - \text{direction} \\ &= \text{Mass per unit time} \times \text{change of velocity in x} - \text{direction} \\ &= \rho Q\left(V_2 \cos\theta_2 - V_1 \cos\theta_1\right) \end{aligned}$$

- Similarly

$$F_y = \rho Q\left(V_2 \sin\theta_2 - V_1 \sin\theta_1\right)$$

- Again, force exerted by the fluid on the pipe bend will be equal and opposite. Therefore , the force components exerted by the fluid on the pipe bend are:

$$F_x = \rho Q\left(V_1 \cos\theta_1 - V_2 \cos\theta_2\right) \text{ and}$$

$$F_y = \rho Q\left(V_1 \sin\theta_1 - V_2 \sin\theta_2\right)$$

- The magnitude of resultant force exerted by the fluid is

$$F = \sqrt{F_x^2 + F_y^2}$$

- And the direction of resultant force with x- axis is

$$\theta = \tan^{-1}\left(\frac{F_y}{F_x}\right)$$

- Since the dynamic forces (equation 2) must be supplemented by the static pressure forces acting over the inlet and outlet sections, therefore

$$F_x = \rho Q\left(V_1\cos\theta_1 - V_2\cos\theta_2\right) + p_1A_1\cos\theta_1 - p_2A_2\cos\theta_2 \quad \text{and}$$

$$F_y = \rho Q\left(V_1\sin\theta_1 - V_2\sin\theta_2\right) + p_1A_1\sin\theta_1 - p_2A_2\sin\theta_2$$

- For three dimensional flow, the same method can be used, but fluid will have also components of velocities in z- direction and corresponding rate of change of momentum in this direction will required force,

$$\therefore\ F_z = \rho Q\left(V_{z2} - V_{z1}\right)$$

5.3 Momentum Correction Factor

- It is define as the ratio of momentum of a flow per second based on actual velocity to momentum of a flow per second based on average velocity across a section.
- It is denoted by β .
- Mathematically,

$$\boxed{\beta = \frac{\text{Momentum per second based on actual velocity}}{\text{Momentum per second based on average velocity}}}$$

5.4 Kinetic Energy Correction Factor

- It is define as the ratio of the kinetic energy of flow per second based on actual velocity across a section to the kinetic energy of flow per second based on average velocity across the same section.
- It is denoted by α .
- Mathematically,

$$\boxed{\alpha = \frac{\text{Kinetic energy per second based on actual velocity}}{\text{Kinetic energy per second based on average velocity}}}$$

5.5 Euler's equation of motion along a stream line

- In Euler's equation of motion, the forces due to gravity and pressure are considered and other forces are neglected. This is derived by considering motion of fluid element along a stream line.
- Consider a stream-line in which flow is taking place in S-direction as shown in fig 5.3.
- Consider a cylindrical element of cross-section of dA and length ds.
- The forces acting on cylindrical element are:
  1. Force due to pressure, pdA in the direction of flow.
  2. Force due to pressure, $\left(p + \frac{\partial p}{\partial s}\,ds\right)dA$, opposite to direction of flow.

3. Weight of element $\rho dAds \cdot g$

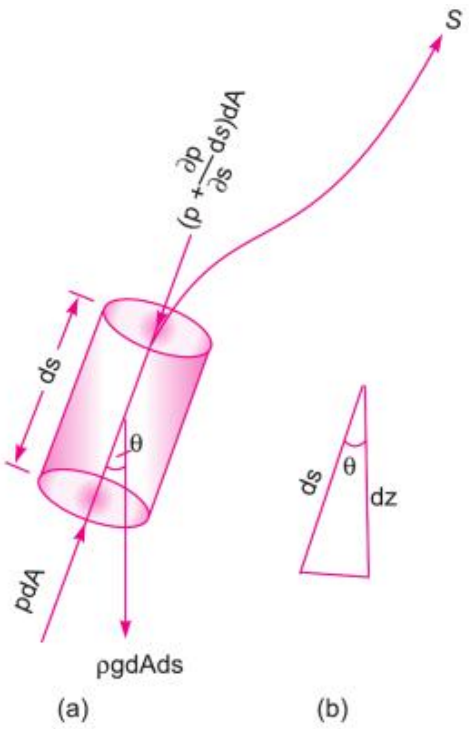

Fig 5.3 Forces on a fluid element

- Let θ is the angle between the direction of flow and line of action of weight of element.
- The resultant force on the fluid element in the direction of S must be equal to the mass of fluid element × acceleration in the direction S.

$$\therefore p\,dA - \left(p + \frac{\partial p}{\partial s}\,ds\right)dA - \rho dAdsg\cos\theta = ma_s$$

Where, a_s = acceleration in direction S.

$$\therefore -\frac{\partial p}{\partial s}\,ds\,dA - \rho dAdsg\cos\theta = \rho dAdsga_s$$

$$\therefore -\frac{\partial p}{\partial s}\frac{1}{\rho} - \cos\theta - a_s = 0 \qquad \text{..... (A)}$$

Now,

$$\therefore a_s = \frac{dV}{dt} \quad \text{where V is a function of s and t}$$

$$\therefore a_s = \frac{\partial V}{\partial s}\frac{ds}{dt} + \frac{\partial V}{\partial t}\frac{dt}{dt}$$

$$\therefore a_s = \frac{\partial V}{\partial s}V + 0 \qquad \left(\frac{\partial V}{\partial t} = 0 \quad \text{Flow is steady}\right)$$

$$\therefore a_s = \frac{\partial V}{\partial s}V \qquad \text{..... (1)}$$

Then,

$$\therefore \cos\theta = \frac{dz}{ds} \qquad \text{..... (2)}$$

- Putting the value of equation (1) and (2) are in equation (A)

$$\therefore -\frac{\partial p}{\partial s}\frac{1}{\rho} - \frac{dz}{ds} - \frac{\partial V}{\partial s} V = 0$$

$$\therefore \frac{\partial p}{\partial s}\frac{1}{\rho} + g\frac{dz}{ds} + \frac{\partial V}{\partial s} V = 0$$

$$\boxed{\therefore \frac{\partial p}{\rho} + g\, dz + V\, \partial V = 0}$$

- This equation is known as **Euler's equation**.

5.6 Mechanical energy of a flowing fluid- Bernoulli's theorem

- The Bernoulli's equation is obtained by integrating the Euler's equation along the stream line for constant density fluid.
- It relates changes in pressure, elevation and velocity of a fluid in motion.
- Integrating Euler's equation of motion equation.

$$\int \frac{dp}{\rho} + \int g dz + \int V\ dV = \int 0$$

$$\therefore \frac{p}{\rho} + g z + \frac{V^2}{2} = \text{constant}$$

- The constant of integration is called Bernoulli constant. Dividing above equation by g.

$$\boxed{\frac{p}{\rho g} + \frac{V^2}{2g} + Z = \text{constant}}$$

- This equation is known as **Bernoulli's equation**.

  Where,

  $\frac{p}{\rho g}$ = Pressure energy per unit weight of fluid or Pressure head.

  $\frac{V^2}{2g}$ = Kinetic energy per unit weight or kinetic head.

  Z = Potential energy per unit weight or potential head or position head or elevation head.

❖ **Assumptions:**

1) The flow is steady.
2) The flow is ideal i.e viscosity is zero

3) The flow is incompressible.
4) The flow is irrotational

❖ **Bernoulli's Theorem:**

– *In a steady, ideal flow of an incompressible fluid, the total energy at any point of the fluid is constant. The total energy consists of pressure energy, kinetic energy and potential energy*.

❖ **Bernoulli's Theorem for real fluid**

– All the viscous fluid are viscous and hence offers resistance to flow.
– Thus there are always some loss in fluid flows and hence in the application of Bernoulli's equation, these losses have to be considered.
– Thus the Bernoulli's equation for real fluids between point 1 and 2 is given as:

$$\boxed{\frac{p_1}{\rho g}+\frac{V_1^1}{2g}+Z_1=\frac{p_2}{\rho g}+\frac{V_2^2}{2g}+Z_2+h_L}$$

Where h_L is loss of energy between points 1 and 2.

❖ **Application**:

– It is used for solving varieties of fluid flow problem such as jet issuing from an orifice.
– Flow under a notches & weir.

5.7 Venturimeter

– It is a device used for measuring the rate of a flow of a fluid flowing through a pipe. It consist of three parts
  1. A short converging part
  2. Throat
  3. Diverging part.
– The working principle of venture meter is based on Bernoulli's equation.
– Consider a venture meter is fitted in a horizontal pipe through which a fluid is flowing as shown fig 5.4.
– Considering two sections along a pipe line the Bernoulli's equation can be written as

$$\frac{p_1}{\rho g}+\frac{V_1^1}{2g}+Z_1=\frac{p_2}{\rho g}+\frac{V_2^2}{2g}+Z_2$$

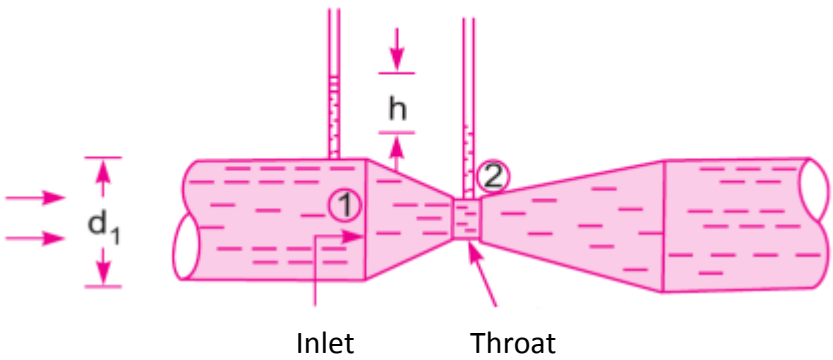

Fig. 5.4 Venturimeter

Let, d_1= diameter at inlet or at section 1,
p_1= pressure at section 1,
V_1= velocity of fluid section 1,
A_1= Area at section 1,
And d_2, p_2, V_2, A_2 are the corresponding values at section 2.

- Applying Bernoulli's equation at section 1 and 2, we get

$$\frac{p_1}{\rho g}+\frac{V_1^2}{2g}+z_1=\frac{p_2}{\rho g}+\frac{V_2^2}{2g}+z_2$$

- Since the pipe is horizontal, $z_1 = z_2$

$$\therefore \frac{p_1}{\rho g}+\frac{V_1^2}{2g}=\frac{p_2}{\rho g}+\frac{V_2^2}{2g}$$

$$\therefore \frac{p_1}{\rho g}-\frac{p_2}{\rho g}=\frac{V_2^2}{2g}-\frac{V_1^2}{2g}$$

$$\therefore h=\frac{V_2^2}{2g}-\frac{V_1^2}{2g} \qquad \cdots\cdots\cdots(1)$$

Where, $\frac{p_1}{\rho g}-\frac{p_2}{\rho g}=h$ = Difference of pressure heads at sections (1) and (2).

- Applying continuity equation at section (1) and (2), we have,

$$A_1V_1=A_2V_2 \text{ OR } V_1=\frac{A_2V_2}{A_1} \qquad \cdots\cdots\cdots(2)$$

From equation (1) and (2),

$$\therefore h=\frac{V_2^2}{2g}-\frac{\left(\frac{A_2V_2}{A_1}\right)^2}{2g}$$

$$\therefore h=\frac{V_2^2}{2g}\left(1-\left(\frac{A_2}{A_1}\right)^2\right)$$

$$\therefore V_2=\frac{A_1\sqrt{2gh}}{\sqrt{A_1^2-A_2^2}} \qquad \cdots\cdots\cdots(3)$$

Discharge, $Q=A_2V_2=\frac{A_1A_2\sqrt{2gh}}{\sqrt{A_1^2-A_2^2}}$ (Using equation. 3)

- Above equation gives the theoretical discharge under ideal condition.

Actual discharge, $\boxed{Q_{act}=C_d\frac{A_1A_2\sqrt{2gh}}{\sqrt{A_1^2-A_2^2}}}$

Where, $C_d=$ Coefficient of discharge for venturimeter and its value taken generally 0.98.

$h=$ Head of fluid in meter of fluid

Value of h given by differential U-tube manometer

Case I: Let the differential manometer contains a liquid which is heavier than the liquid flowing through the pipe.(Horizontal Venturimeter)

$$h = x\left[\frac{S_h}{S_o} - 1\right]$$

Where S_h = Specific gravity of heavier liquid

S_o = Specific gravity of liquid flowing through pipe

X = Difference of heavier liquid in column in U-tube

Case II: Let the differential manometer contains a liquid which is lighter than the liquid flowing through the pipe. .(Horizontal Venturimeter)

$$h = x\left[1 - \frac{S_l}{S_o}\right]$$

Where S_l = Specific gravity of lighter liquid

S_o = Specific gravity of liquid flowing through pipe

X = Difference of heavier liquid in column in U-tube

Case III: Let the differential manometer contains a liquid which is heavier than the liquid flowing through the pipe.(Inclined Venturimeter)

$$h = \left(\frac{p_1}{\rho g} - \frac{p_2}{\rho g}\right) + \left(z_1 - z_2\right) = x\left[\frac{S_h}{S_o} - 1\right]$$

Case IV: Let the differential manometer contains a liquid which is lighter than the liquid flowing through the pipe.(Inclined Venturimeter)

$$h = \left(\frac{p_1}{\rho g} - \frac{p_2}{\rho g}\right) + \left(z_1 - z_2\right) = x\left[1 - \frac{S_l}{S_o}\right]$$

5.8 Orifice meter

- Orifice meter is a device used for measuring the rate of flow of fluid through a pipe with the using of orifice plate. The working principle is similar to venturimeter and it is works on Bernoulli's theorem.
- It is cheaper device compare to the Venturimeter.
- It consists of flat circular plate which has a circular sharp edge hole called orifice, which is concentric with the pipe.
- The orifice meter generally kept 0.5 times diameter of the pipe, though it may varies from 0.4 to 0.8 times the pipe diameter.
- Consider an orifice meter is fitted in a horizontal pipe through which a fluid is flowing as shown fig 5.5.

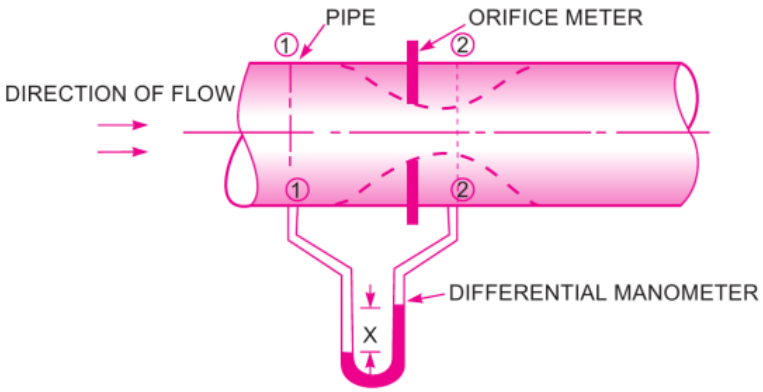

Fig.5.5. Orificemeter

Let, d_1= diameter at inlet or at section 1,

p_1= pressure at section 1,

V_1= velocity of fluid section 1,

A_1= Area at section 1,

And d_2, p_2, V_2, A_2 are the corresponding values at section 2.

– Applying Bernoulli's equation at section 1 and 2, we get

$$\frac{p_1}{\rho g}+\frac{V_1^2}{2g}+z_1=\frac{p_2}{\rho g}+\frac{V_2^2}{2g}+z_2$$

$$\therefore\left(\frac{p_1}{\rho g}+z_1\right)-\left(\frac{p_2}{\rho g}+z_2\right)=\frac{V_2^2}{2g}-\frac{V_1^2}{2g}$$

$$\text{But}\left(\frac{p_1}{\rho g}+z_1\right)-\left(\frac{p_2}{\rho g}+z_2\right)=\text{Differential head}=\text{h}$$

$$\therefore h=\frac{V_2^2}{2g}-\frac{V_1^2}{2g} \qquad \cdots\cdots\cdots(1)$$

– Applying continuity equation at section (1) and (2), we have,

$$A_1V_1=A_2V_2$$

$$\therefore V_1=\frac{A_2V_2}{A_1} \qquad \cdots\cdots\cdots(2)$$

– Consider area of orifice meter is A_o and area at section 2 is A_2, so co-efficient of contraction can be written as below,

$$C_c=\frac{A_2}{A_o}$$

$$\therefore A_2=C_c\times A_o \qquad \cdots\cdots\cdots(3)$$

From equation (2)

$$\therefore V_1=\frac{A_2V_2}{A_1}=\frac{C_cA_oV_2}{A_1}$$

From eq. (1)

$$\therefore h=\frac{V_2^2}{2g}-\frac{V_1^2}{2g}$$

$$\therefore h = \frac{V_2^2}{2g} - \frac{\left(\frac{C_c A_o}{A_1} V_2\right)^2}{2g}$$

$$\therefore h = \frac{V_2^2}{2g}\left(1 - C_c^2\left(\frac{A_o}{A_1}\right)^2\right)$$

$$\therefore V_2 = \frac{\sqrt{2gh}}{\sqrt{1 - \frac{C_c^2 A_o^2}{A_1^2}}} \qquad \cdots\cdots\cdots(4)$$

- Discharge

$$Q = A_2 V_2$$

$$\boxed{\therefore Q = C_c A_0 \frac{\sqrt{2gh}}{\sqrt{1 - \frac{C_c^2 A_o^2}{A_1^2}}}} \quad \text{(In form of } C_c\text{)} \qquad \cdots\cdots\cdots(5)$$

- Equation (4) gives the actual velocity of the fluid flow.
  According to definition of the co-efficient of contraction (C_c)

$$C_v = \frac{Actual\ velocity}{Max.\ velocity}$$

$$= \frac{\frac{\sqrt{2gh}}{\sqrt{1 - \frac{C_c^2 A_o^2}{A_1^2}}}}{\frac{\sqrt{2gh}}{\sqrt{1 - \frac{A_o^2}{A_1^2}}}} = \frac{\sqrt{1 - \frac{A_o^2}{A_1^2}}}{\sqrt{1 - \frac{C_c^2 A_o^2}{A_1^2}}} \qquad \cdots\cdots\cdots(6)$$

- According to definition of the co-efficient of discharge (C_d)

$$C_d = \frac{Actual\ discharge}{Theoritical\ discharge} = \frac{A_2 V_2}{A_o V_1} = C_c \times C_v$$

$$C_c = \frac{C_d}{C_v} = C_d \times \frac{\sqrt{1 - \frac{A_o^2}{A_1^2}}}{\sqrt{1 - \frac{C_c^2 A_o^2}{A_1^2}}}$$

- Putting value of C_C in equation (5)

$$\boxed{\therefore Q_{act} = C_d \frac{A_0 A_1 \sqrt{2gh}}{\sqrt{A_1^2 - A_o^2}}}$$

5.9 Rotameter

- A rotameter is a discharge measuring device as shown in fig. 5.6. The rotameter is installed in a vertical pipe and measure the discharge directly without any calculation.

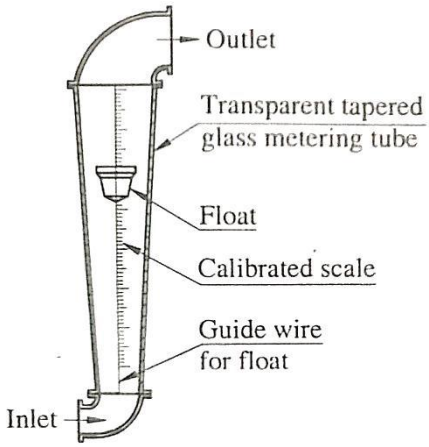

Fig. 5.6 Rotameter

- Rotameter consist different part like, accurately grounded glass tube and a float. One scale is given on the glass tube which is gives the discharge rating.
- If flow is not pass through the rotameter than the float rest at bottom inside the tube. When fluid is enters in the tube, the float moves up and steady at one point and discharge is measured on the calibrated scale.
  Note: Generally discharge given by rotameter is in liter per hour.
- The rotameter is used in chemical industries where high degree of accuracy is not required and flow variation is less.

Advantage

a) Good for small flows.
b) Pressure drop is less.
c) Cheaper in cost.
d) It can be handle wide variety of corrosive fluids.

Disadvantage

a) It must be mounted vertically.
b) It is not good for pulsating flows.
c) The glass tube is easily brake.
d) Its accuracy is less.

5.10 Measurement of velocity – Pitot tube

- The Pitot tube is used for measure the velocity of flow at any point in a pipe or a channel.
- It is based on the principle that if the velocity of the flow at a point becomes zero, the pressure head is increase due to velocity head is zero.

- In its simplest form, the Pitot tube consist of a glass tube, bent at right angles as shown in fig. 5.7.

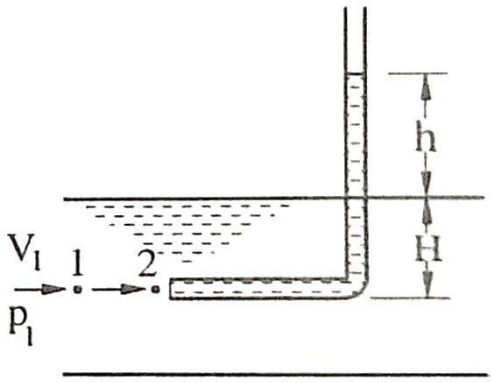

Fig. 5.7 Pitot tube

Consider,

p_1= Pressure at point 1,

V_1= Velocity of fluid point 1,

p_2 = Pressure at point 2,

V_2 = Velocity of fluid point 2,

H = Depth of tube in the liquid

h =Rise of the liquid in the tube above the free surface.

- Applying Bernoulli's equation between points 1 and 2, we get

$$\frac{p_1}{\rho g}+\frac{V_1^2}{2g}+z_1=\frac{p_2}{\rho g}+\frac{V_2^2}{2g}+z_2$$

- But Z_1=Z_2 and V_2 =0 (static condition)

From fig $\frac{p_1}{\rho g}=H=$ Pressure head at point 1,

$\frac{p_2}{\rho g}=H+h=$ Pressure head at point 2,

- Substitute this values we get,

$$H+\frac{V_1^2}{2g}=H+h$$

$$\therefore V_1=\sqrt{2gh}\rightarrow \text{Theoretical velocity}$$

- Actual velocity is given by,

$$V=C_v\times V_1$$

$$\boxed{\therefore V=C_v\times\sqrt{2gh}}$$

- Pitot tube with U-tube differential manometer is shown in fig. 5.8.

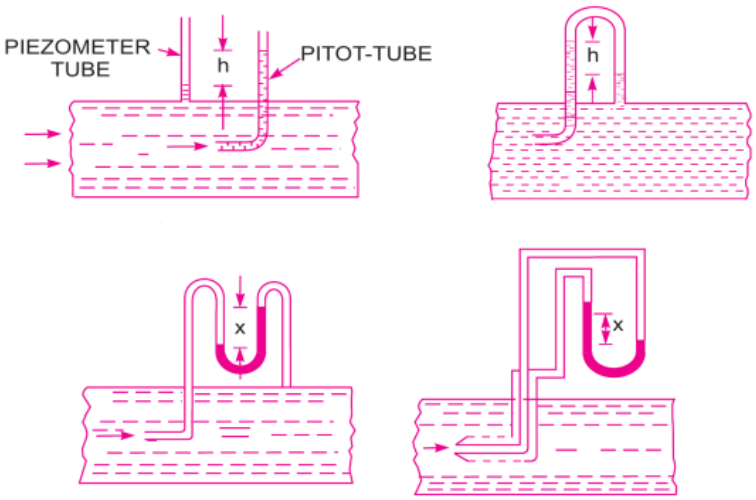

Fig. 5.8 Pitot tube with differential U-tube manometer

- If differential U-tube manometer is used with Pitot tube than value of h can be determine by the equation similar to venturimter. Where, x is the reading of U-tube differential manometer.

  Note: The difference between total pressure (stagnation pressure) and static pressure is called dynamic pressure.

5.11 Flow through orifice - Theory of small orifice

- Consider a tank fitted with a circular orifice at one of its side as shown in fig.
- Let H be the head of liquid above the centre of the orifice. The liquid flowing through the orifice form a jet of liquid whose area of cross section is less than that of the orifice.
- The area of jet of fluid goes on decreasing and at a section C-C, the area is minimum. This section is called **Vena- contracta**.
- Beyond this section, the jet diverges and is attracted in the downward direction by the gravity.
- Consider two points 1 and 2 as shown in fig 5.9. Point 1 is inside the tank and point 2 is at the vene-contracta. Let the flow is steady and at a constant head H.

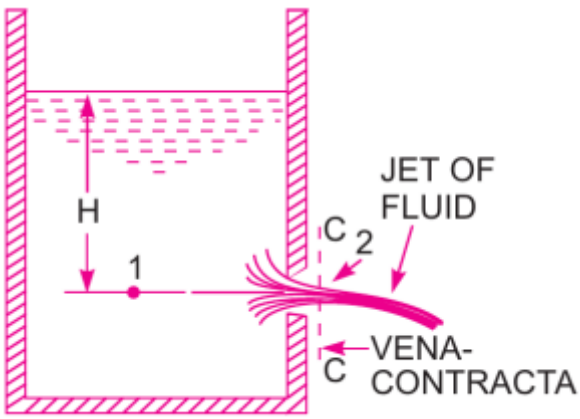

Fig. 5.9 Flow through orifice

p_1 = Pressure at point 1,

V_1 = Velocity of fluid point 1,

$p_2 =$ Pressure at point 2,

$V_2 =$ Velocity of fluid point 2,

$H =$ Depth of tube in the liquid

- Applying Bernoulli's equation between points 1 and 2, we get

$$\frac{p_1}{\rho g}+\frac{V_1^2}{2g}+z_1=\frac{p_2}{\rho g}+\frac{V_2^2}{2g}+z_2$$

But $z_1 = z_2$ and $V_1 = 0$ (static condition)

- From fig. $\frac{p_1}{\rho g} = H =$ Pressure head at point 1,

$$p_2 = 0 \quad \text{(Atmospheric condition)}$$

- Substitute this values we get,

$$H = 0 + \frac{V_2^2}{2g}$$

$$\boxed{V_2 = \sqrt{2gH}} \rightarrow \text{Theoretical velocity}$$

5.12 Hydraulic coefficients

- The hydraulic coefficients are discussed below:

Coefficient of velocity

- It is defined as the ratio between the actual velocity of a jet of liquid at vena-contracta and the theoretical velocity of jet.
- Mathematically it can written as,

$$C_v = \frac{\textit{Actual velocity of jet at } \text{vena contracta}}{\textit{Theoretical velocity}} = \frac{V}{\sqrt{2gh}}$$

Coefficient of contraction

- It is defined as the ratio of the area of the jet at vena-conracta to the area of the orifice.
- Mathematically it can written as,

$$C_c = \frac{\textit{Area of jet at vena} - \textit{contracta}}{\textit{Area of orifice}} = \frac{A_c}{A_o}$$

Coefficient of discharge

- It is defined as the ratio of the actual discharge from an orifice to the theoretical discharge from the orifice.
- Mathematically it can written as,

$$C_d = \frac{\textit{Actual discharge}}{\textit{Theoretical discharge}} = \frac{Q}{Q_{th}}$$

Note: Relation between hydraulic coefficients is given by,

Using above three eq.

$$C_d = \frac{Q}{Q_{th}} = \frac{A_c \times V}{A_o \times \sqrt{2gh}} = C_c \times C_v$$

– Equation give the relation between the hydraulic coefficients.

5.13 Flow through large rectangular orifice

– Orifice is considered large when $h < 5 \times depth\ of\ orifice$.

– Consider large orifice on a side of tank discharge freely into atmosphere under a constant head, H as shown in fig 5.10.

Let H_1 = height of liquid above top edge of orifice

H_2 = height of liquid above top edge of orifice

b = breath of orifice

d = depth of orifice = $H_2 - H_1$

C_d = Co – efficient of discharge

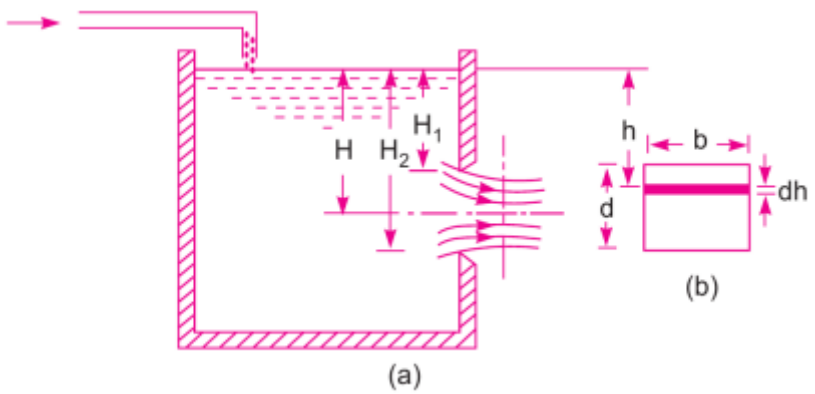

Fig. 5.10 Flow through large orifice

– Consider a elementary horizontal small strip of depth dh at a depth of h from the surface of the liquid.

Area of the strip, $dA = b \times dh$

Theoretical velocity, $V = \sqrt{2gh}$

$\therefore$ Discharge through strip, $dQ = C_d \times dA \times V = C_d \times b \times dh \times \sqrt{2gh}$

– Total discharge,

$$Q = \int_{H_1}^{H_2} (C_d \times b \times \sqrt{2gh} \times dh)$$

$$\therefore Q = C_d b \sqrt{2g} \int_{H_1}^{H_2} \sqrt{h} dh$$

$$\therefore Q = C_d b \sqrt{2g} \left[\frac{h^{3/2}}{3/2} \right]_{H_1}^{H_2}$$

$$\boxed{\therefore Q = \frac{2}{3} C_d b \sqrt{2g} \left[H_2^{3/2} - H_1^{3/2} \right]}$$

5.14 Notches and Weirs

Notches

- A notch is a device used for measuring the rate of flow of liquid through a small channel or a tank.
- It is also defined as an opening in the side of the tank or a small channel in such way that the liquid surface in the tank or channel is below the top edge of the opening.

Weirs

- A weir is a concrete or mesonary structure, placed in open channel over which the flow occurs.
- It is generally in the form of vertical wall, with a sharp edge at top, running all the way across the open channel.

  Note: The notch is small in size and weirs is big in size.

• Discharge through Rectangular Notches OR Weirs

- The expression for discharge over a rectangular notch or weirs are the same.
- Consider a rectangular notch or weirs provided in a channel carrying water as shown in fig.

  Let,

  $H =$ Head of water over the crest

  $L =$ Length of notch or weirs
- Consider a small strip of water of thickness dh and length L at a depth h from the free surface as shown in fig 5.11.

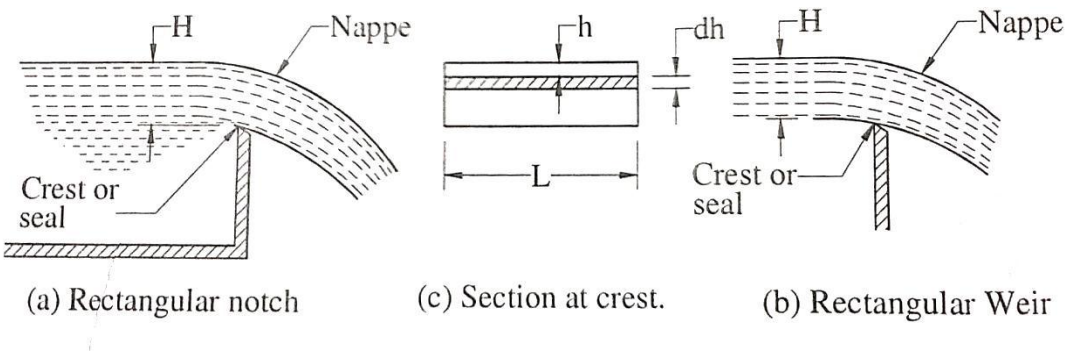

Fig. 5.11 Rectangular notch or weirs

Area of strip, $dA = L \times dh$

Theoretical velocity, $V = \sqrt{2gh}$

Discharge through small strip

$$dQ = C_d \times dA \times V$$

$$= C_d \times L \times dh \times \sqrt{2gh}$$ Where, C_d = coefficient of discharge

– Total discharge,

$$Q = \int_0^H C_d L \sqrt{2gh}\, dh$$

$$\therefore Q = C_d \times L \sqrt{2g} \int_0^H \sqrt{h}\, dh$$

$$\therefore Q = C_d \times L \sqrt{2g} \left[\frac{h^{3/2}}{3/2} \right]_0^H$$

$$\boxed{\therefore Q = \frac{2}{3} C_d \times L \sqrt{2g} \times H^{3/2}}$$

• Discharge through Triangular Notches OR Weirs

– Triangular notch is also called V-notch.

– Consider horizontal strip of the water of thickness dh at a depth of h from the free surface of water as shown in fig.

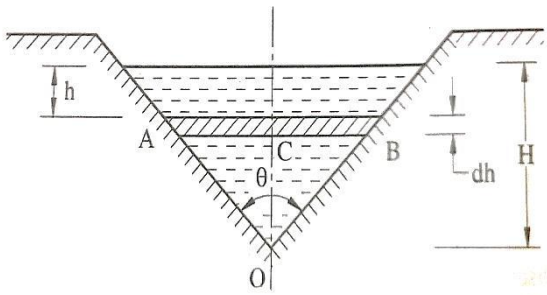

Fig. 5.12 Triangular notch or weirs

Let,

$H =$ Head of water over the crest

$\theta =$ Angle of notch or weirs

From fig.

$$\tan \theta/2 = \frac{AC}{OC} = \frac{AC}{H-h}$$

– Width of the strip,

$$AB = 2AC = 2(H-h) \times \tan \theta/2$$

– Area of the strip,

$$dA = 2AC \times dh = 2(H-h) \times \tan \theta/2 \times dh$$

– Theoretical Velocity of water through strip,

$$V = \sqrt{2gh}$$

– Discharge through strip,

$$dQ = C_d \times dA \times V$$

$$\therefore dQ = C_d \times 2(H-h) \times tan\,\theta/2 \times dh \times \sqrt{2gh}$$

$$\therefore dQ = 2C_d (H-h) tan\,\theta/2 \sqrt{2gh}\, dh$$

– Total discharge through notch or weirs,

$$Q = \int_0^H dQ$$

$$= \int_0^H 2C_d (H-h) tan\,\theta/2 \sqrt{2gh}\, dh$$

$$\therefore Q = 2C_d\ tan\,\theta/2 \sqrt{2g} \int_0^H (H-h)\sqrt{h}\ dh$$

$$\therefore Q = 2C_d\ tan\,\theta/2 \sqrt{2g} \int_0^H \left(H\sqrt{h} - h\sqrt{h}\right) dh$$

$$\therefore Q = 2C_d\ tan\,\theta/2 \sqrt{2g} \int_0^H \left(H\sqrt{h} - h^{3/2}\right) dh$$

$$\therefore Q = 2C_d\ tan\,\theta/2 \sqrt{2g} \left[\frac{Hh^{3/2}}{3/2} - \frac{h^{5/2}}{5/2}\right]_0^H$$

$$\therefore Q = 2C_d\ tan\,\theta/2 \sqrt{2g} \left[\frac{HH^{3/2}}{3/2} - \frac{H^{5/2}}{5/2}\right]$$

$$\therefore Q = 2C_d\ tan\,\theta/2 \sqrt{2g} \left[\frac{2}{3}H^{5/2} - \frac{2}{5}H^{5/2}\right]$$

$$\boxed{\therefore Q = \frac{8}{15} C_d\ tan\,\theta/2 \sqrt{2g}\, H^{5/2}}$$

– For right angle triangle V-notch,

$$\theta = 90^o\ and\ tan\,\theta/2 = 1$$

$g = 9.81$ *and* $C_d = 0.6$, Above eq. becomes

$$\boxed{Q = 1.415\ H^{5/2}}$$

5.15 List of Formula

1. Bernoulli's Equation

$$\frac{p_1}{\rho g}+\frac{V_1^1}{2g}+Z_1=\frac{p_2}{\rho g}+\frac{V_2^2}{2g}+Z_2$$

2. Bernoulli's Equation for real fluid

$$\frac{p_1}{\rho g}+\frac{V_1^1}{2g}+Z_1=\frac{p_2}{\rho g}+\frac{V_2^2}{2g}+Z_2+h_L$$

3. Discharge through Venturimeter or Orifice meter

$$Q=A_2V_2=\frac{A_1A_2\sqrt{2gh}}{\sqrt{A_1^{\,2}-A_2^{\,2}}}$$

Where A_1 = area at the inlet of the Venturimeter

A_1 = area at the throat of the Venturimeter

C_d = Co-efficient of Venturimeter

h = Difference of pressure head in terms of fluid head flowing through Venturimeter

4. Value of h is given by differential U – tube manometer

Case I: Let the differential manometer contains heavier liquid (Horizontal Venturimeter)

$$h=x\left[\frac{S_h}{S_o}-1\right]$$

Case II: Let the differential manometer contains lighter liquid (Horizontal Venturimeter)

$$h=x\left[1-\frac{S_l}{S_o}\right]$$

Case III: differential manometer contains heavier liquid (Inclined Venturimeter)

$$h=\left(\frac{p_1}{\rho g}-\frac{p_2}{\rho g}\right)+\left(z_1-z_2\right)=x\left[\frac{S_h}{S_o}-1\right]$$

Case IV: differential manometer contains lighter liquid (Inclined Venturimeter)

$$h=\left(\frac{p_1}{\rho g}-\frac{p_2}{\rho g}\right)+\left(z_1-z_2\right)=x\left[1-\frac{S_l}{S_o}\right]$$

5. Pitot tube

$$V=C_v\times\sqrt{2gh}$$

5.16 Solved Numerical

Examples:1 A pipe line carrying oil of specific gravity 0.9 changes in diameter from 250 mm diameter at a position 1 to 450mm diameter at a position 2 which is 6m at a higher level. If pressure at 1 and 2 are 12 N/cm^{2}and 6 N/cm^2 respectively and discharge is 250 liters/s. Calculate the loss of head and direction of flow.

Solution:

Given data:

$$d_1 = 250\,\text{mm} = 0.25\,\text{m} \qquad z_1 = 0$$
$$d_2 = 450\,\text{mm} = 0.45\,\text{m} \qquad z_2 = 6\,\text{m}$$
$$p_1 = 12\,\text{N/cm}^2 = 12\times10^4\ \text{N/m}^2$$
$$p_2 = 6\,\text{N/cm}^2 = 6\times10^4\ \text{N/m}^2$$
$$Q = 250\,\text{lit/s} = 0.25\ \text{m}^3/\text{s}$$
$$S = 0.9 \Rightarrow \rho = 0.9\times1000 = 900\,\text{kg/m}^3$$

Find:

$$\text{Direction of flow} = ?$$
$$h_L = ?$$

$\rightarrow$ Area $a_1 = \frac{\pi}{4}d_1^2 = \frac{\pi}{4}(0.25)^2 = 0.04908\,\text{m}^2$

Area $a_2 = \frac{\pi}{4}d_2^2 = \frac{\pi}{4}(0.45)^2 = 0.159\,\text{m}^2$

$\rightarrow$ Velocity $V_1 = \frac{Q}{a_1} = \frac{0.25}{0.04908} = 5.093\,\text{m/s}$

Velocity $V_2 = \frac{Q}{a_2} = \frac{0.25}{0.159} = 1.57\,\text{m/s}$

$\rightarrow$ Total energy at section 1 $= E_1 = \frac{p_1}{\rho g} + \frac{V_1^2}{2g} + z_1$

$$= \frac{12\times10^4}{900\times9.81} + \frac{(5.093)^2}{2\times9.81} + 0$$
$$= 14.91\,\text{m}$$

$\rightarrow$ Total energy at section 2 $= E_2 = \frac{p_2}{\rho g} + \frac{V_2^2}{2g} + z_2$

$$= \frac{6\times10^4}{900\times9.81} + \frac{(1.57)^2}{2\times9.81} + 6$$
$$= 12.91\,\text{m}$$

$\rightarrow$ Here $E_1 > E_2 \Rightarrow$ $\boxed{\text{flow is taking place from 1 to 2.}}$

$\rightarrow$ Loss of head $h_L = E_1 - E_2 = 14.91 - 12.91 = \boxed{2\,\text{m}}$

Example 2: In a duct of 400 mm diameter, a pitot static tube is placed in the centre. The mean velocity in the duct is 0.85 0f central velocity. Determine the discharge through the duct if the difference between the static and total pressure is 80 mm of water. Take the co-efficient of pitot tube as C_v = 0.98.

Solution:

Given data:

$$D = 400\,\text{mm} = 0.4\,\text{m}$$
$$\bar{V} = 0.85 \times \text{central velocity}$$
$$h = 80\,\text{mm of water} = 0.08\,\text{m of water}$$
$$C_v = 0.98$$

Find:

$$Q = ?$$

$\rightarrow$ Central velocity is given as $V = C_v\sqrt{2gh} = 0.98 \times \sqrt{2 \times 9.81 \times 0.08} = 1.227\,\text{m/s}$

$\therefore$ Average velocity $\bar{V} = 0.85 \times 1.227 = 1.043\,\text{m/s}$

$\therefore$ Discharge $Q = A\bar{V} = \frac{\pi}{4}d^2 \times \bar{V}$

$$= \frac{\pi}{4} \times (0.4)^2 \times 1.043$$

$$\boxed{Q = 0.131\,\text{m}^3/\text{s}}$$

Example 3: An oil of sp. gr. 0.8 flowing through a venturimeter having inlet diameters 20 cm and throat diameter 10 cm. The oil- mercury differential manometer shows a reading of 25 cm. Calculate the discharge of oil through the horizontal venturimeter. Take $C_d = 0.98$.

Solution:

Given data:

$$S_o = 0.8$$
$$S_h = 13.6$$
$$d_1 = 20\,\text{cm} = 20 \times 10^{-2}\,\text{m}$$
$$d_2 = 10\,\text{cm} = 10 \times 10^{-2}\,\text{m}$$
$$C_d = 0.98$$
$$\text{Reading of differential manometer } x = 25\,\text{cm}$$

To Find:

$$Q = ?$$

$$Q = C_d \frac{A_1 A_2 \sqrt{2gh}}{\sqrt{A_1^2 - A_2^2}} \qquad \ldots\ldots\ldots(1)$$

$$A_1 = \frac{\pi}{4} d_1^2 = \frac{\pi}{4}\left(20\times10^{-2}\right)^2 = 314.16\times10^{-4}\ \text{m}^2$$

$$A_2 = \frac{\pi}{4} d_2^2 = \frac{\pi}{4}\left(10\times10^{-2}\right)^2 = 78.54\times10^{-4}\ \text{m}^2$$

$$h = x\left[\frac{S_h}{S_o} - 1\right] = 25\times10^{-2}\left[\frac{13.6}{0.8} - 1\right] = 25\times10^{-2}\left[17-1\right] = 400\times10^{-2}\ \text{m of oil}$$

Putting this value in equation

$$Q = C_d \frac{A_1 A_2 \sqrt{2gh}}{\sqrt{A_1^{\ 2} - A_2^{\ 2}}}$$

$$\therefore\ Q = 0.98\times\frac{314.16\times10^{-4}\times78.54\times10^{-4}\sqrt{2\times9.81\times400\times10^{-2}}}{\sqrt{(314.16\times10^{-4})^2 - (78.54\times10^{-4})^2}}$$

$$= 70465\times10^{-6}\ \text{m}^3/\text{s}$$

$$\boxed{\therefore\ Q = 70465\ \text{cm}^3/\text{s}}$$

6

TWO DIMENSIONAL IDEAL FLUID FLOW

Course Contents

6.1. Velocity potential function and Stream function

6.2. Types of motion

6.3. Vortex flow

6.4. Potential flow (Ideal flow)

1. Uniform flow
2. Source flow
3. Sink flow
4. Free vortex flow
5. Superimposed flow

6.5. Solved Numerical

6.1 Velocity Potential Function and Stream Function

6.1.1 Velocity Potential Function

- It is defined as a scalar function of space and time such that its negative derivative with respect to any direction gives the fluid velocity in that direction.

Mathematically, the velocity potential function is defined as $\phi = f(x, y, z)$ for steady flow such that

$$u = -\frac{\partial \phi}{\partial x}, v = -\frac{\partial \phi}{\partial y}, w = -\frac{\partial \phi}{\partial z} \quad \text{.....(6.1)}$$

where u, v and w are the velocity components in x, y and z directions respectively.

The continuity equation for incompressible steady flow is

$$\frac{\partial u}{\partial x} + \frac{\partial v}{\partial y} + \frac{\partial w}{\partial z} = 0 \quad \text{.....(6.2)}$$

Substituting the value of u, v and w in above equation (6.2), we get

$$\frac{\partial}{\partial x}\left(-\frac{\partial \phi}{\partial x}\right) + \frac{\partial}{\partial y}\left(-\frac{\partial \phi}{\partial y}\right) + \frac{\partial}{\partial z}\left(-\frac{\partial \phi}{\partial z}\right) = 0$$

$$\frac{\partial^2 \phi}{\partial x^2} + \frac{\partial^2 \phi}{\partial y^2} + \frac{\partial^2 \phi}{\partial z^2} = 0 \quad \text{.....(6.3)}$$

Equation (6.3) is a Laplace equation.

For two dimensional case, equation reduced to $\frac{\partial^2 \phi}{\partial x^2} + \frac{\partial^2 \phi}{\partial y^2} = 0$

If any value of ϕ that satisfies the Laplace equation, will correspond to some case of fluid flow.

Properties of the Potential function

The rotational components are given by

$$\omega_z = \frac{1}{2}\left(\frac{\partial v}{\partial x} - \frac{\partial u}{\partial y}\right)$$

$$\omega_y = \frac{1}{2}\left(\frac{\partial u}{\partial z} - \frac{\partial w}{\partial x}\right)$$

$$\omega_z = \frac{1}{2}\left(\frac{\partial w}{\partial y} - \frac{\partial v}{\partial z}\right)$$

Substituting the value of u, v and w from equation (6.1) in the above rotational components, we get

$$\omega_z = \frac{1}{2}\left(\frac{\partial}{\partial x}\left(-\frac{\partial \phi}{\partial y}\right) - \frac{\partial}{\partial y}\left(-\frac{\partial \phi}{\partial x}\right)\right) = \frac{1}{2}\left[-\frac{\partial^2 \phi}{\partial x \partial y} + \frac{\partial^2 \phi}{\partial x \partial y}\right]$$

$$\omega_y = \frac{1}{2}\left(\frac{\partial}{\partial z}\left(-\frac{\partial \phi}{\partial x}\right) - \frac{\partial}{\partial x}\left(-\frac{\partial \phi}{\partial z}\right)\right) = \frac{1}{2}\left[-\frac{\partial^2 \phi}{\partial x \partial z} + \frac{\partial^2 \phi}{\partial x \partial z}\right]$$

$$\omega_z = \frac{1}{2}\left(\frac{\partial}{\partial y}\left(-\frac{\partial \phi}{\partial z}\right) - \frac{\partial}{\partial z}\left(-\frac{\partial \phi}{\partial y}\right)\right) = \frac{1}{2}\left[-\frac{\partial^2 \phi}{\partial y \partial z} + \frac{\partial^2 \phi}{\partial y \partial z}\right]$$

If ϕ is the continuous function, then $\omega_x = \omega_y = \omega_z = 0$

When rotational components are zero, the flow is called irrotational. Hence the properties of the potential function are:

1. If ϕ exists, the flow should be irrotational
2. If ϕ satisfies the Laplace equation, it represents the possible steady incompressible irrotational flow.

6.1.2 Stream Function

– It is defined as a scalar function of space and time such that its partial derivative with respect to any direction gives the velocity component at right angles to that direction. It is define only for two dimensional flow.

Mathematically, for steady flow, it is defined as $\psi = f(x, y)$ such that

$$\frac{\partial \psi}{\partial x} = v, \frac{\partial \psi}{\partial y} = -u \quad \text{.....(6.4)}$$

The continuity equation for two dimensional flow is

$$\frac{\partial u}{\partial x} + \frac{\partial v}{\partial y} = 0 \quad \text{.....(6.5)}$$

Substituting the value of u and v from (6.4) in to (6.5), we get

$$\frac{\partial u}{\partial x}\left(-\frac{\partial \psi}{\partial y}\right) + \frac{\partial}{\partial y}\left(\frac{\partial \psi}{\partial x}\right) = 0$$

$$\frac{\partial^2 \psi}{\partial x \partial y} + \frac{\partial^2 \psi}{\partial x \partial y} = 0$$

Hence existent of ψ means a possible case of fluid flow. The flow may be rotational or irrotational.

The rotational component ω_z is given by $\omega_z = \frac{1}{2}\left(\frac{\partial v}{\partial x} - \frac{\partial u}{\partial y}\right)$

Substituting the value of u and v from equation (6.4) in the above rotational component, we get

$$\omega_z = \frac{1}{2}\left(\left(\frac{\partial \psi}{\partial x}\right) - \frac{\partial}{\partial y}\left(-\frac{\partial \psi}{\partial y}\right)\right) = \frac{1}{2}\left[\frac{\partial^2 \psi}{\partial x^2} + \frac{\partial^2 \psi}{\partial y^2}\right]$$

For irrotational flow, $\omega_z = 0$. Hence above equation becomes as $\frac{\partial^2 \psi}{\partial x^2} + \frac{\partial^2 \psi}{\partial y^2} = 0$

Which is Laplace equation for ψ .

Properties of Stream function

1. If ψ exists, it is possible case of fluid flow which may be rotational or irrotational.
2. If ψ satisfies the Laplace equation, it is possible case of an irrotational flow.

6.1.3 Equipotential Line (Line of Constant velocity potential function)

– A line which along which the velocity potential function ϕ is constant is called equipotential line.

For equipotential line $\phi =$ Constant

$$d\phi = 0$$

But $\phi = f(x, y)$ for steady flow

$$d\phi = \frac{\partial \phi}{\partial x}dx + \frac{\partial \phi}{\partial y}dy$$
$$= -udx - vdy$$
$$= -(udx + vdy)$$

For equipotential line $d\phi = 0$

$$-(udx + vdy) = 0$$
$$udx + vdy = 0$$
$$\frac{dy}{dx} = -\frac{u}{v} = \text{ Slope of equipotential line} \quad \text{.....(6.6)}$$

6.1.4 Line of Constant Stream function

For equipotential line $\psi =$ Constant

$$d\psi = 0$$

But $\psi = f(x, y)$ for steady flow

$$d\psi = \frac{\partial \psi}{\partial x}dx + \frac{\partial \psi}{\partial y}dy$$
$$= vdx - udy$$

For line of constant stream function $d\psi = 0$

$$vdx - udy = 0$$
$$\frac{dy}{dx} = \frac{v}{u} = \text{ Slope of stream line} \quad \text{.....(6.7)}$$

– From equation (6.6) and (6.7) it is clear that the product of the slope of the equipotential line and slope of the stream line at the point of the intersection is equal to -1. Thus the equipotential lines are orthogonal to the stream lines at all points of intersection.

– A grid obtained by drawing a series of equipotential lines and stream lines is called a flow net.

6.1.5 Relation between Stream function and Velocity potential function

As we know that $u = -\frac{\partial \phi}{\partial x}, v = -\frac{\partial \phi}{\partial y}$ and $v = \frac{\partial \psi}{\partial x}, u = -\frac{\partial \psi}{\partial y}$

Thus we have $u = -\frac{\partial \phi}{\partial x} = -\frac{\partial \psi}{\partial y}$ and $v = -\frac{\partial \phi}{\partial y} = \frac{\partial \psi}{\partial x}$

Hence $\frac{\partial \phi}{\partial x} = \frac{\partial \psi}{\partial y}$ and $\frac{\partial \phi}{\partial y} = -\frac{\partial \psi}{\partial x}$

6.2 Types of Motion

The fluid particle which moving may undergo anyone or combination of following types of displacements:

1. Linear translation or Pure translation
2. Linear Deformation
3. Angular deformation
4. Rotation

6.2.1 Linear Translation

It is defined as the movement of an element in such a way that it moves bodily from one position to another position and the two axes ab and cd represented in new positions by $a'b'$ and $c'd'$ are parallel as shown in Fig 6.1 (a).

6.2.2 Linear Deformation

It is defined as the deformation of a fluid element in linear direction when the element moves. The axis of the element in the deformed position and un-deformed position are parallel, but their lengths change as shown in Fig 6.2 (b).

6.3.3 Angular Deformation or Shear Deformation

It is defined as the average change in the angle contained by two adjacent sides. Let $\Delta\theta_1$ and $\Delta\theta_2$ is the change in angle between two adjacent sides of a fluid element as shown in Fig. 6.1 (c), then angular deformation or shear strain rate is

$$= \frac{1}{2}\left[\Delta\theta_1 + \Delta\theta_2\right]$$

Now $\Delta\theta_1 = \frac{\partial v}{\partial x} \times \frac{\Delta x}{\Delta x} = \frac{\partial v}{\partial x}$ and $\Delta\theta_2 = \frac{\partial u}{\partial y} \times \frac{\Delta y}{\Delta y} = \frac{\partial u}{\partial y}$

Angular deformation or shear strain rate $= \frac{1}{2}\left[\Delta\theta_1 + \Delta\theta_2\right] = \frac{1}{2}\left[\frac{\partial v}{\partial x} + \frac{\partial u}{\partial y}\right]$

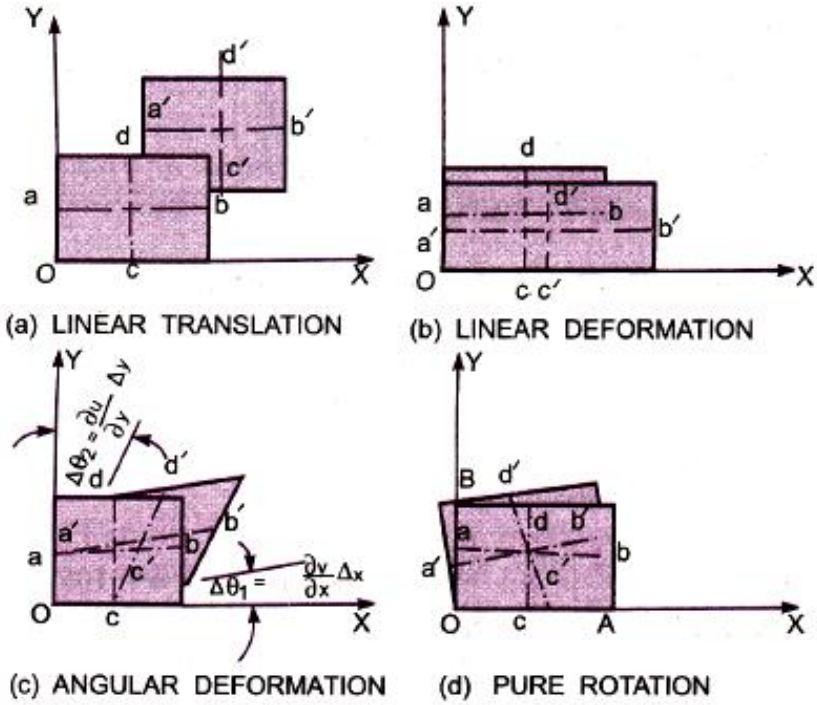

Fig. 6.1 Displacement of fluid element

6.2.4 Rotation

It is defined as the movement of a fluid element in such a way that both of its axes (Horizontal as well as vertical) rotate in the same direction as shown in Fig. 6.1 (d). It is equal to $\frac{1}{2}\left(\frac{\partial v}{\partial x}-\frac{\partial u}{\partial y}\right)$ for two dimensional element in $x-y$ plane.

The rotational components are

$$\omega_z=\frac{1}{2}\left(\frac{\partial v}{\partial x}-\frac{\partial u}{\partial y}\right),\omega_y=\frac{1}{2}\left(\frac{\partial u}{\partial z}-\frac{\partial w}{\partial x}\right),\omega_z=\frac{1}{2}\left(\frac{\partial w}{\partial y}-\frac{\partial v}{\partial z}\right) \quad \text{.....(6.8)}$$

6.2.5 Vorticity

It is defined as the value twice of the rotation and hence it is given as 2ω.

6.3 Vortex Flow

- Vortex flow is defined as the flow of fluid along curved path or the flow of a rotating mass of fluid is known as Vortex flow.
- The vortex is of two types:
    1. Free vortex flow
    2. Forced vortex flow

6.3.1 Free Vortex Flow

- When no external torque required to rotate the fluid mass, that type of flow is called free vortex flow. Thus the liquid in case of free vortex flow is rotate due to the rotation which is imparted to the fluid previously.

Examples of free vortex flow:

1. Flow of liquid through the hole provided at the bottom of the container.
2. Flow of liquid around a circular bend in a pipe.
3. A whirlpool in river

4. Flow of fluid in a centrifugal pump casing.

Consider a fluid particle of mass m at a radial distance r from the axis of rotation, having a tangential velocity v. Then

Angular momentum $=$ Mass $\times$ velocity $= m \times v$

Moment of momentum $=$ Momentum $\times r = m \times v \times r$

Time rate of change of angular momentum $= \frac{\partial}{\partial t}(mvr)$

For free vortex $= \frac{\partial}{\partial t}(mvr) = 0$

Integrating we get $mvr =$ Constant

$$vr = \frac{\text{Constant}}{m} = \text{Constant}$$

6.3.2 Equation of Motion for Vortex Flow

Consider a fluid element ABCD as shown in Fig. 6.2 rotating at a uniform velocity in a horizontal plane about an axis perpendicular to the plane of paper and passing through O.

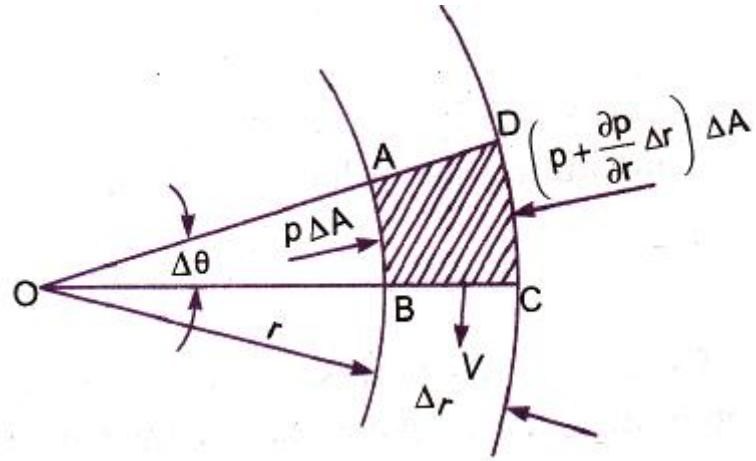

Fig. 6.2 Rotation of fluid element ABCD

Let $r =$ radius of element from O

$\Delta\theta =$ Angle subtended by the element at O

$\Delta r =$ Radius thickness of the element

$\Delta A =$ Area of cross section of element

The forces acting on the element are:

Pressure force, $p\Delta A$ on the face AB

Pressure force $\left(p + \frac{\partial p}{\partial r}\Delta r\right)\Delta A$ on the face CD

Centrifugal force, $\frac{mv^2}{r}$ acting in the direction away from the centre O

Now the mass of the element $=$ Mass density $\times$ Volume

$$= \rho \times \Delta A \times \Delta r$$

$$\text{Centrifugal force} = \rho \Delta A \Delta r \frac{v^2}{r}$$

Equating the forces in the radial direction, we get

$$\left(p+\frac{\partial p}{\partial r}\Delta r\right)\Delta A - p\Delta A = \rho\Delta A\Delta r\frac{v^2}{r}$$

$$\frac{\partial p}{\partial r}\Delta A\Delta r = \rho\Delta A\Delta r\frac{v^2}{r}$$

$$\frac{\partial p}{\partial r} = \rho\frac{v^2}{r} \quad \text{.....(6.9)}$$

Equation (6.9) gives the pressure variation along the radial direction for a forced or free vortex flow in a horizontal plane. The expression $\frac{\partial p}{\partial r}$ is called pressure gradient in the radial direction. As $\frac{\partial p}{\partial r}$ is positive, hence pressure increase with the increase of radius r.

The pressure variation in vertical plane is given by the Hydraustatic law

$$\frac{\partial p}{\partial z} = \rho g \quad \text{.....(6.10)}$$

The pressure p varies with respect to r and z. Thus p is the function of r and z and hence total derivative of p is

$$dp = \frac{\partial p}{\partial r}dr + \frac{\partial p}{\partial z}dz$$

Substituting the value of $\frac{\partial p}{\partial r}$ from equation (6.9) and $\frac{\partial p}{\partial z}$ from equation (6.10), we get

$$dp = \rho\frac{v^2}{r}dr - \rho g dz \quad \text{.....(6.11)}$$

Equation (6.11) gives the variation of pressure of a rotating fluid in any plane.

6.3.3 Equation of Free Vortex Flow

For free vortex flow, we have

$$v \times r = \text{Constant} = c$$

$$v = \frac{c}{r}$$

Substituting the value of v in equation (6.11), we get

$$dp = \rho\frac{v^2}{r}dr - \rho g dz = \rho\frac{c^2}{r^3}dr - \rho g dz$$

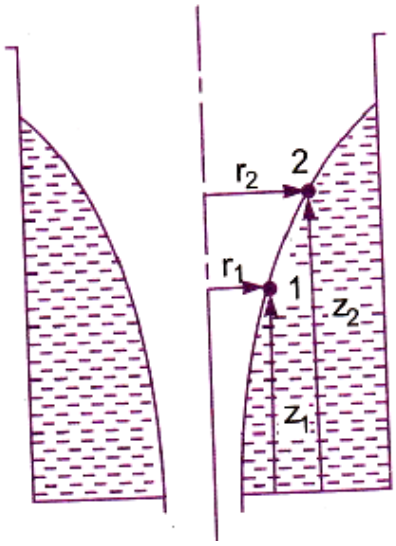

Fig. 6.3

Consider two points 1 and 2 in the fluid having radius r_1 and r_2 from the central axis respectively shown in Fig 6.3. The heights of the point from bottom of the vessel is z_1 and z_2.

Integrating above equation for point 1 and 2, we get

$$\int_1^2 dp = \int_1^2 \frac{\rho c^2}{r^3} dr - \int_1^2 \rho g dz$$

$$(p_2 - p_1) = \rho c^2 \int_1^2 r^{-3} dr - \rho g \int_1^2 dz$$

$$= \rho c^2 \left[\frac{r_2^{-3+1}}{-2} \right]_1^2 - \rho g [z_2 - z_1]$$

$$= -\frac{\rho c^2}{2} \left[\frac{1}{r_2^2} - \frac{1}{r_1^2} \right] - \rho g [z_2 - z_1] = -\frac{\rho}{2} \left[\frac{c^2}{r_2^2} - \frac{c^2}{r_1^2} \right] - \rho g [z_2 - z_1]$$

$$= -\frac{\rho}{2} \left[v_2^2 - v_1^2 \right] - \rho g [z_2 - z_1]$$

$$= -\frac{\rho}{2} \left[v_1^2 - v_2^2 \right] - \rho g [z_2 - z_1]$$

Divided by ρg, we get

$$\frac{p_2 - p_1}{\rho g} = \frac{v_1^2 - v_2^2}{2g} - [z_2 - z_1]$$

$$\frac{p_1}{\rho g} + \frac{v_1^2}{2g} + z_1 = \frac{p_2}{\rho g} + \frac{v_2^2}{2g} + z_2$$

Above equation is Bernoulli's equation. Hence in case of free vortex flow it is applicable.

6.3.4 Forced Vortex Flow

Forced vortex flow is defined as that type of flow in which some external torque is required to rotate the fluid mass. The fluid mass in this type of flow is rotate at constant angular velocity ω. The tangential velocity of any fluid particle is given by

$$v = \omega \times r$$

where $r =$ Radius of fluid particle from the axis of rotation

Hence angular velocity ω is given by,

$$\omega = \frac{v}{r} = \text{Constant}$$

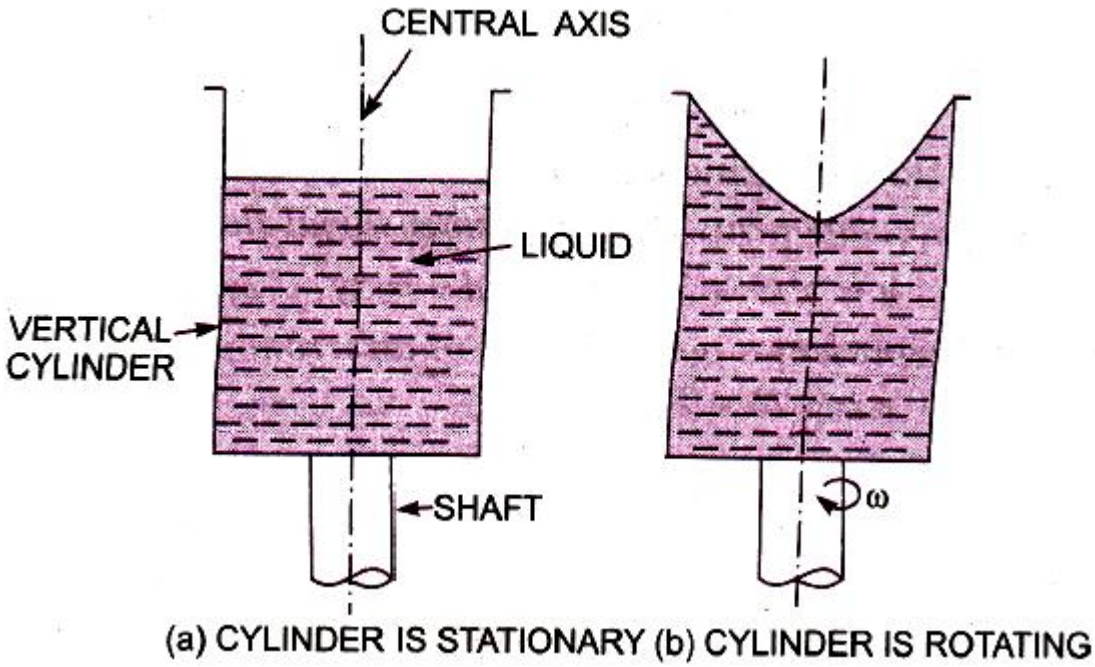

Fig. 6.4 Forced vortex flow

Examples of forced vortex flow:

1. A vertical cylinder containing liquid which is rotate about its central axis with a constant angular velocity ω
2. Flow of liquid inside the impeller of a centrifugal pump
3. Flow of water through the runner of a turbine.

6.3.5 Equation of Forced Vortex Flow

For forced vortex flow we have,

$$v = \omega \times r$$

Substituting the value of v in equation (6.11), we get

$$dp = \rho \frac{\omega^2 r^2}{r} dr - \rho g dz$$

Consider two points 1 and 2 in the fluid having forced vortex flow as shown in Fig.

Integrating above equation for point 1 and 2, we get

$$\int_1^2 dp = \int_1^2 \rho\omega^2 r dr - \int_1^2 \rho g dz$$

$$(p_2 - p_1) = \left[\rho\omega^2 \frac{r^2}{2}\right] - \rho g [z]_1^2$$

$$(p_2 - p_1) = \frac{\rho\omega^2}{2}\left[r_2^2 - r_1^2\right] - \rho g [z_2 - z_1]$$

$$= \frac{\rho}{2}\left[\omega^2 r_2^2 - \omega^2 r_1^2\right] - \rho g [z_2 - z_1]$$

$$= \frac{\rho}{2}\left[v_2^2 - v_1^2\right] - \rho g [z_2 - z_1]$$

If the point 1 and 2 lie on the free surface of the liquid, then $p_1 = p_2$ and hence above equation becomes

$$0 = \frac{\rho}{2}\left[v_2^2 - v_1^2\right] - \rho g [z_2 - z_1]$$

$$\rho g [z_2 - z_1] = \frac{\rho}{2}\left[v_2^2 - v_1^2\right]$$

$$[z_2 - z_1] = \frac{1}{2g}\left[v_2^2 - v_1^2\right]$$

If point 1 lie on the axis of rotation, then $v_1 = \omega \times r_1 = \omega \times 0 = 0$ then above equation becomes as

$$[z_2 - z_1] = \frac{v_2^2}{2g}$$

Let $[z_2 - z_1] = Z$ then we have $Z = \frac{v_2^2}{2g} = \frac{\omega^2 \times r_2^2}{2g}$ .....(6.12)

Thus in above equation (6.12) Z varies with the square of r. Hence it is equation of parabola and free surface of liquid is a parabolic.

6.4 Potential Flow (Ideal flow)

- Ideal fluid is a fluid which is incompressible and inviscid. Hence fluid for which density is constant and viscosity is zero is called an ideal fluid.
- The shear stress is given by, $\tau = \mu \frac{du}{dy}$. Hence for ideal fluid the shear stress will be zero as $\mu = 0$ for ideal fluid. The ideal fluids will be moving with uniform velocity. All the particles will be moving with the same velocity.
- The concept of ideal fluid simplifies mathematical analysis. Fluids such as water and air have low viscosity may be treated as ideal fluids.

The following are the important cases of potential flow:

1. Uniform flow
2. Source flow
3. Sink flow

4. Free vortex flow
5. Superimposed flow

6.4.1 Uniform Flow

(a) Uniform flow parallel to x-axis

In a uniform flow velocity remains constant. All the fluid particles are moving with the same velocity as shown in Fig. 6.5.

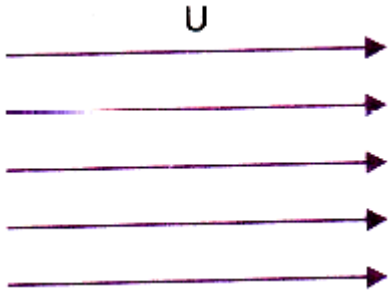

Fig. 6.5 Uniform flow parallel to x axis

Let $U =$ Velocity which is uniform or constant along x-axis

u and $v =$ Components of uniform velocity U along x and y axis.

Uniform flow, parallel to x-axis, the velocity components u and v are given as

$$u = V \text{ and } v = 0 \quad \text{.....(6.13)}$$

But the velocity u in terms of stream function is given by,

$$u = \frac{\partial \psi}{\partial y}$$

But the velocity u in terms of velocity potential function is given by,

$$u = \frac{\partial \phi}{\partial x}$$

$$u = \frac{\partial \psi}{\partial y} = \frac{\partial \phi}{\partial x} \quad \text{.....(6.14)}$$

Similarly $$v = -\frac{\partial \psi}{\partial x} = \frac{\partial \phi}{\partial y}$$

But $u = U$ from equation (6.13). Substituting in equation (6.14), we have

$$U = \frac{\partial \psi}{\partial y} = \frac{\partial \phi}{\partial x}$$

First part gives $d\psi = Udy$ and second part gives $d\phi = Udx$

Integrating of these parts gives as

$$\psi = Uy + C_1 \text{ and } \phi = U.x + C_2$$

where C_1 and C_2 are constant of integration

Now let us plot the stream line and potential lines for uniform flow parallel to x axis.

Plotting of streamlines

For stream lines, the equation is

$$\psi = U \times y + C_1$$

Let $\psi = 0$, where $y = 0$. Substituting these values in the above equation, we get

$$0 = U \times 0 + C_1 \text{ thus } C_1 = 0$$

Hence equation of stream line becomes as

$$\psi = U.y \quad \text{.....(6.15)}$$

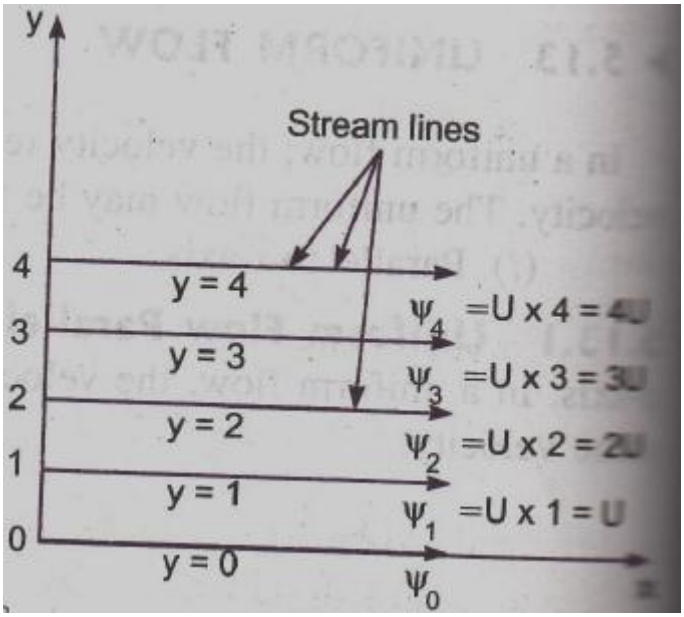

Fig. 6.6 Stream lines parallel to x axis

Stream lines are straight lines parallel to x axis and at a distance y from the x axis as shown in Fig. 6.6.

In equation (6.15), $U.y$ represents the volume flow rate between x axis and that stream line at a distance y .

Plotting of potential function

For potential function, the equation is

$$\phi = U.x + C_2$$

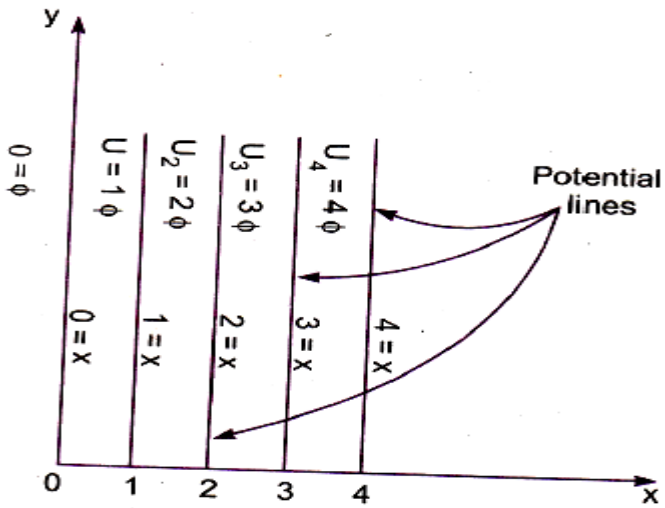

Fig. 6.7 Potential lines parallel to y axis

Let $\phi = 0$, where $x = 0$. Substituting these values in the above equation, we get $C_2 = 0$

$$0 = U \times 0 + C_1 \text{ thus } C_1 = 0$$

Hence equation of potential line becomes as

$$\phi = U.x \quad \text{.....(6.16)}$$

Above equation shows that potential lines are straight lines parallel to y axis and at a distance x from the y axis as shown in Fig. 6.7.

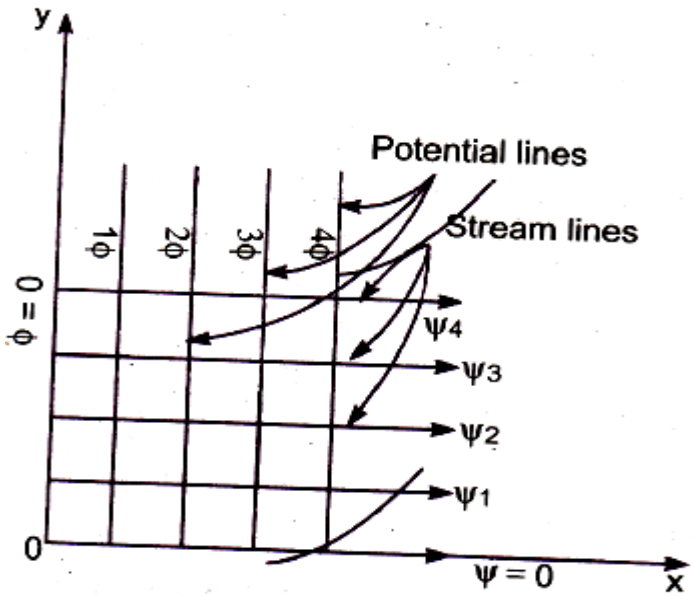

Fig. 6.8 Plot of stream lines and potential lines

Fig. 6.8 shows that the plot of stream lines and potential lines for uniform flow parallel to x axis. The stream lines and potential lines intersect each other at right angles.

(b) Uniform flow parallel to y -axis

Fig. 6.9 shows uniform flow parallel to y -axis.

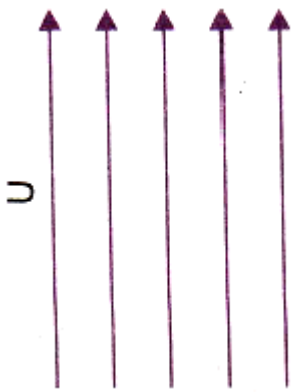

Fig. 6.9 Uniform flow parallel to y axis

Let $U =$ Velocity which is uniform or constant along y -axis

u and $v =$ Components of uniform velocity U along x and y axis.

Uniform flow, parallel to x-axis, the velocity components u and v are given as

$$u = 0 \text{ and } v = U \quad \text{.....(6.17)}$$

But the velocity u in terms of stream function and velocity potential function is given as,

$$u = \frac{\partial \psi}{\partial y} = \frac{\partial \phi}{\partial x} \quad \text{.....(6.18)}$$

Similarly

$$v = -\frac{\partial \psi}{\partial x} = \frac{\partial \phi}{\partial y} \quad \text{.....(6.19)}$$

But $v = u$ from equation (6.17), Substituting $v = u$ in equation (6.19), we have

$$U = -\frac{\partial \psi}{\partial x} = \frac{\partial \phi}{\partial y}$$

First part gives $d\psi = -Udx$ and second part gives $d\phi = U.dy$

Integrating of these parts gives as

$$\psi = -U.x + C_1 \text{ and } \phi = U.y + C_2$$

where C_1 and C_2 are constant of integration

Plotting of streamlines

For stream lines, the equation is

$$\psi = U \times x + C_1$$

Let $\psi = 0$, where $x = 0$. Substituting these values in the above equation, we get

$$0 = U \times 0 + C_1 \text{ thus } C_1 = 0$$

Hence equation of stream line becomes as

$$\psi = -U.x \quad \text{.....(6.20)}$$

Above equation shows that stream lines are straight lines parallel to y axis and at a distance of x from the y axis as shown in Fig. 6.10. The -ve shows that the stream lines are in the downwards direction.

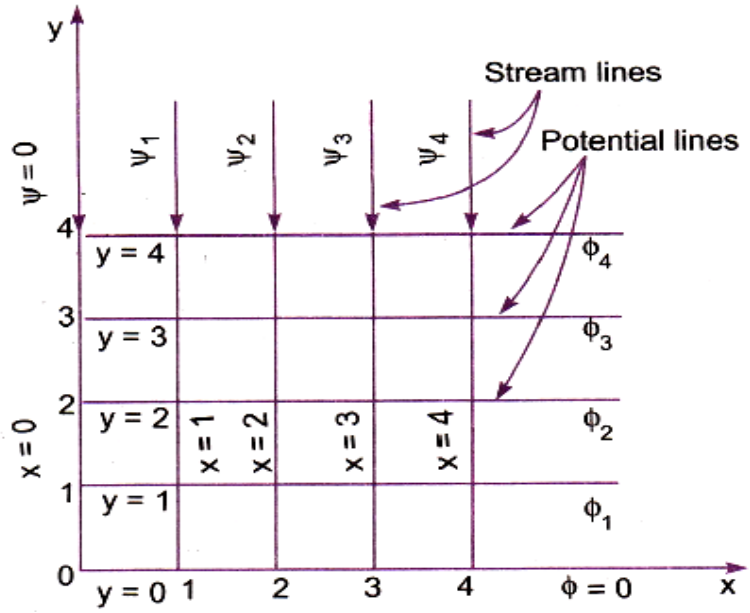

Fig. 6.10 Plot of stream lines and potential lines

Plotting of potential lines

For potential function, the equation is

$$\phi = U.y + C_2$$

Let $\phi = 0$, where $y = 0$. Substituting these values in the above equation,

$$0 = U \times 0 + C_2 \text{ thus } C_2 = 0$$

Hence equation of potential line becomes as

$$\phi = U.y \quad \text{.....(6.21)}$$

Above equation shows that potential lines are straight lines parallel to x axis and at a distance of y from the x axis as shown in Fig. 6.10.

6.4.2 Source Flow

The source flow is the flow coming from a point and moving out radially in all directions of a plane at uniform rate. Fig. 6.11 shows that a source flow in which the point O is the source from which the fluid moves radially outwards. The strength of a source is defined as the volume flow rate per unit depth. The unit of strength of source is m^2/s.

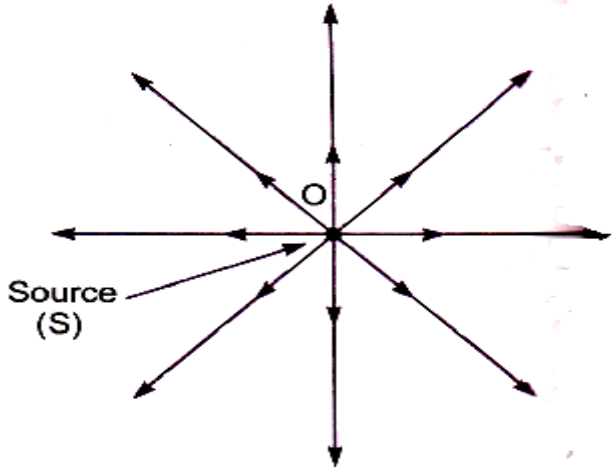

Fig. 6.11 Source flow

Let $u_r =$ radial velocity of flow at radius r from the source O

$q =$ volume flow rate per unit depth

$r =$ radius

The radial velocity u_r at any radius r is given by,

$$u_r = \frac{q}{2\pi r} \quad \text{.....(6.22)}$$

The above equation shows that with the increase of r, the radial velocity decreases. And at a large distance away from the source, the velocity will be equal to zero. The flow is an radial direction, hence the tangential velocity $u_\theta = 0$.

Equation of stream function

By definition the radial velocity and tangential velocity components in terms of stream function are given by,

$$u_r = \frac{1}{r}\frac{\partial \psi}{\partial \theta} \text{ and } u_\theta = -\frac{\partial \psi}{\partial r}$$

But substituting the $u_r = \frac{q}{2\pi r}$ in above equation, we get

$$\frac{1}{r}\frac{\partial \psi}{\partial \theta} = \frac{q}{2\pi r}$$

$$\partial \psi = r\frac{q}{2\pi r}.d\theta$$

Integrating the above equation w.r.t θ, we get

$$\psi = \frac{q}{2\pi} \times \theta + C_1$$

Let $\psi = 0$, when $\theta = 0$, then $C_1 = 0$

Hence equation of stream function becomes as

$$\psi = \frac{q}{2\pi} \times \theta$$

The equation shows that stream function is a function of θ. For a given value of θ, the stream function ψ will be constant. And this will be radial line. The stream lines can be plotted by having different values of θ. Here θ is taken in radians.

Plotting of stream lines

When $\theta = 0, \psi = 0$

$\theta = 45^0 = \frac{\pi}{4}$ radians, $\psi = \frac{q}{2\pi}.\frac{\pi}{4} = \frac{q}{8}$

$\theta = 90^0 = \frac{\pi}{2}$ radians, $\psi = \frac{q}{2\pi}.\frac{\pi}{2} = \frac{q}{4}$

$\theta = 135^0 = \frac{3\pi}{4}$ radians, $\psi = \frac{q}{2\pi}.\frac{3\pi}{4} = \frac{3q}{8}$

The stream lines will be radial lines as shown in Fig. 6.12

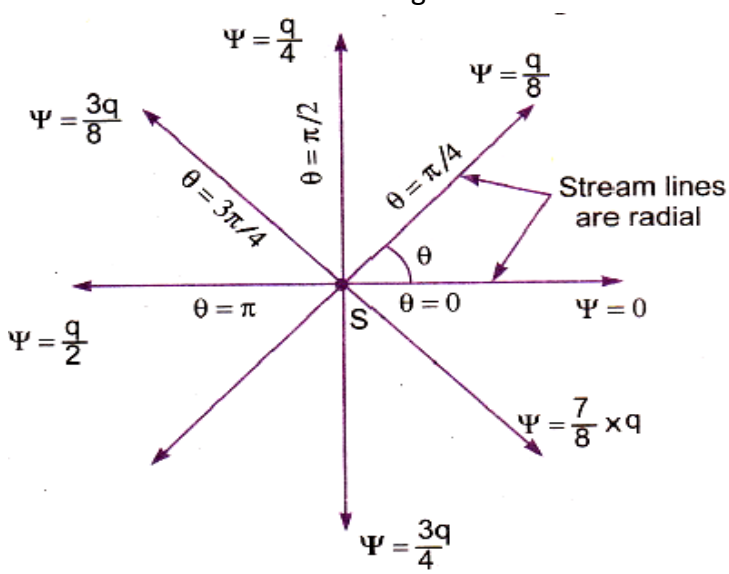

Fig. 6.12 Stream lines

Equation of potential function

By definition the radial and tangential components in terms of velocity function are given by,

$$u_r = \frac{1}{r}\frac{\partial \phi}{\partial r} \text{ and } u_\theta = \frac{1}{r}\frac{\partial \phi}{\partial \theta}$$

But substituting the $u_r = \frac{q}{2\pi r}$ in above equation, we get

$$\frac{\partial \phi}{\partial r} = \frac{q}{2\pi r}$$

$$\partial \phi = \frac{q}{2\pi r}.dr$$

Integrating the above equation, we get

$$\int d\phi = \int \frac{q}{2\pi r}.dr$$

$$\phi = \frac{q}{2\pi}\int \frac{1}{r}dr$$

$$= \frac{q}{2\pi}\log_e r$$

The above equation shows that the velocity potential function is a function of r. For a given value of r, the velocity function ϕ will be constant. Hence it will be a circle with origin at the source. The velocity potential lines will be circles with origin at the source as shown in Fig.

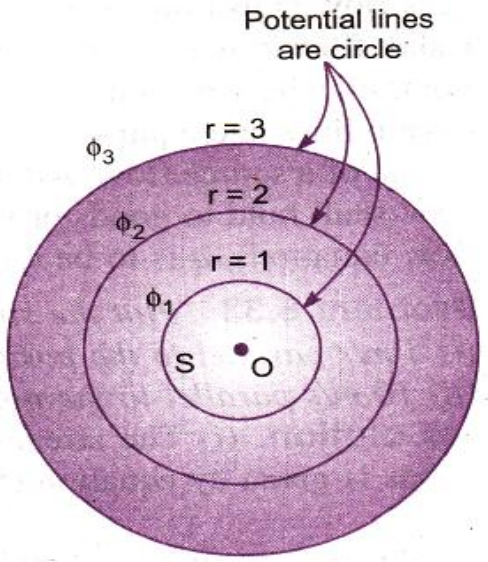

Fig. 6.13 Potential lines

Pressure distribution in a plane source flow

The pressure distribution in a plane source flow can be obtained with the help of Bernoulli's equation. Let us assume that the plane of the flow is horizontal. In that case the datum head will be same for two points of flow.

Let $p =$ pressure at point 1 which is at a radius r from the source at point 1

$u_r =$ velocity at point 1

$p_0 =$ pressure at point 2, which is at a large distance away from the source. The velocity will be zero at point 2.

Applying Bernoulli's equation, we get

$$\frac{p}{\rho g}+\frac{u_r^{\ 2}}{2g}=\frac{p_0}{\rho g}+0$$

$$\left(p-p_0\right)=-\frac{\rho u_r^{\ 2}}{2}$$

But substitute the value of $u_r=\dfrac{q}{2\pi r}$ in the above equation, we get

$$\left(p-p_0\right)=\left(\frac{\rho}{2}\right)\left(\frac{q}{2\pi r}\right)^2$$

$$=-\frac{\rho q^2}{8\pi^2 r^2}$$

The above equation shows that the pressure is inversely proportional to the square of the radius from the source.

6.4.3 Sink Flow

The sink flow in which fluid moves radially inwards towards a point where it disappears at a constant rate. This flow is just opposite to the source flow. Fig. 6.14 shows a sink flow in which the fluid moves radially inwards towards point O, where it disappears at a constant rate.

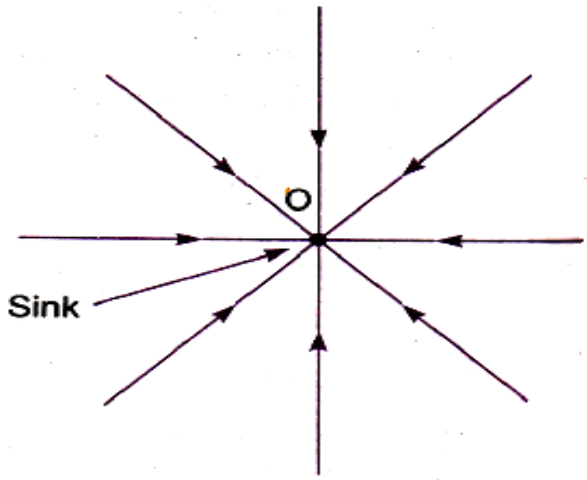

Fig. 6.14 Sink flow

The pattern of stream lines and equipotential lines of a sink flow is the same as that of a source flow. All the equation derived from source flow shall hold good for sink flow also except that in sink flow equations, q is to be replaced by $\left(-q\right)$.

6.5 Solved Numerical

1. The velocity vector in a fluid flow is given by,
   $V = 4x^3 i - 10x^2 yj + 2tk$

   Find the velocity and acceleration of a fluid particle at (2, 1, 3) at time t = 1.

   Solution:

   The velocity components u, v and w are $u = 4x^3, v = -10x^2, w = 2t$

   For the point $(2,1,3)$, we have $x = 2, y = 1$ and $z = 3$ at time $t = 1$

   Hence velocity components at $(2,1,3)$ are

$$u = 4 \times (2)^3 = 32 \text{ units}$$
$$v = -10(2)^2 \times 1 = -40 \text{ units}$$
$$w = 2 \times 1 = 2 \text{ units}$$

   $\therefore$ Velocity vector V at $(2,1,3) = 32i - 40j + 2k$

$$\text{Resultant velocity} = \sqrt{u^2 + v^2 + w^2} = \sqrt{32^2 + (-40)^2 + 2^2} = 51.26 \text{ units}$$

   Acceleration is given by,

$$a_x = u\frac{\partial u}{\partial x} + v\frac{\partial u}{\partial y} + w\frac{\partial u}{\partial z} + \frac{\partial u}{\partial t}$$
$$a_y = u\frac{\partial v}{\partial x} + v\frac{\partial v}{\partial y} + w\frac{\partial v}{\partial z} + \frac{\partial v}{\partial t}$$
$$a_z = u\frac{\partial w}{\partial x} + v\frac{\partial w}{\partial y} + w\frac{\partial w}{\partial z} + \frac{\partial w}{\partial t}$$

   Now from velocity components, we have

$$\frac{\partial u}{\partial x} = 12x^2, \frac{\partial u}{\partial y} = 0, \frac{\partial u}{\partial z} = 0 \text{ and } \frac{\partial u}{\partial t} = 0$$
$$\frac{\partial v}{\partial x} = -20xy, \frac{\partial v}{\partial y} = -10x^2, \frac{\partial v}{\partial z} = 0, \frac{\partial v}{\partial t} = 0$$
$$\frac{\partial w}{\partial x} = 0, \frac{\partial w}{\partial y} = 0, \frac{\partial w}{\partial z} = 0 \text{ and } \frac{\partial w}{\partial t} = 2.1$$

   Substituting the values, the acceleration components at $(2,1,3)$ at time $t = 1$ are

$$a_x = 4x^3(12x^2) + (-10x^2y)(0) + 2t \times (0) + 0$$
$$= 48x^5 = 48 \times (2)^5 = 1536 \text{ units}$$
$$a_y = 4x^3(-20xy) + (-10x^2y)(-10x^2) + 2t \times (0)$$
$$= -80x^4y + 100x^4y$$
$$= -80(2)^4(1) + 100(2)^4 \times 1$$
$$= 320 \text{ units}$$
$$a_z = 4x^3(0) + (-10x^2y)(0) + 2t \times (0) + 2.1 = 2 \text{ units}$$

Acceleration is $A = a_x i + a_y j + a_z k = 1536i + 320j + 2k$

Resultant $A = \sqrt{(1536)^2 + (320)^2 + (2)^2} = 1568.9$ units

2. The velocity potential function (ϕ) is given by an expression $\phi = \frac{-xy^3}{3} - x^2 + \frac{x^3 y}{3} + y^2$

   (i) Find the velocity components in x and y direction.

   (ii) Show that ϕ represents a possible case of flow

Solution:

Given: $\phi = \frac{-xy^3}{3} - x^2 + \frac{x^3 y}{3} + y^2$

Partial derivatives of ϕ w.r.t x and y are

$$\frac{\partial \phi}{\partial x} = -\frac{y^3}{3} - 2x + \frac{3x^2 y}{3}$$

and $$\frac{\partial \phi}{\partial x} = -\frac{3xy^2}{3} - \frac{x^3}{3} + 2y$$

(i) The velocity components u and v are given by

$$u = -\frac{\partial \phi}{\partial x} = -\left[-\frac{y^3}{3} - 2x + \frac{3x^2 y}{3}\right] \text{.....(1)}$$

$$u = \frac{y^3}{3} + 2x - x^2 y$$

$$u = \frac{y^3}{3} + 2x - x^2 y$$

$$v = -\frac{\partial \phi}{\partial y} = \left[-\frac{3xy^2}{3} - \frac{x^3}{3} + 2y\right] = \frac{3xy^2}{3} - \frac{x^3}{3} - 2y \text{.....(2)}$$

$$v = xy^2 - \frac{x^3}{3} - 2y$$

(ii) The given value of ϕ represents a possible case of flow if it satisfies the Laplace equation

$$\frac{\partial^2 \phi}{\partial x^2} + \frac{\partial^2 \phi}{\partial y^2} = 0$$

From equations (1) and (2), we have

$$\frac{\partial \phi}{\partial x} = -\frac{y^3}{3} - 2x + x^2 y$$

$$\frac{\partial^2 \phi}{\partial x^2} = -2 + 2xy$$

$$\frac{\partial \phi}{\partial y} = -xy^2 - \frac{x^3}{3} - 2$$

$$\frac{\partial^2 \phi}{\partial y^2} = -2xy + 2$$

$$\frac{\partial^2\phi}{\partial x^2}+\frac{\partial^2\phi}{\partial y^2}=\left(-2+2xy\right)+\left(-2xy+2\right)=0$$

$\therefore$ Laplace equation satisfied and hence ϕ represent a possible case of flow.

3. The velocity components in two dimensional flow field for an incompressible fluid are as follows: $u=\frac{y^3}{3}+2x-x^2y$ and $v=xy^2--2y-\frac{x^3}{3}$. Obtain an expression for the stream function ψ.

Solution:

Given: $u=\frac{y^3}{3}+2x-x^2y$ and $v=xy^2-2y-\frac{x^3}{3}$

The velocity components in terms of stream functions are

$$\frac{\partial\psi}{\partial x}=v=xy^2-2y-\frac{x^3}{3}\text{.....(i)}$$

$$\frac{\partial\psi}{\partial y}=-u=-\frac{y^3}{3}-2x+x^2y\text{.....(ii)}$$

Integrating (i) w.r.t x we get

$$\psi=\int\left(xy^2-2y-\frac{x^3}{3}\right)dx$$

$$=\frac{x^2y^2}{2}-2xy-\frac{x^4}{4\times3}+k\text{.....(iii)}$$

where k is a constant of integration which is indepent of x but can be function of y.

Differentiating equation (iii) w.r.t y we get,

$$\frac{\partial\psi}{\partial y}=-\frac{2x^2y}{2}-2x+\frac{\partial k}{\partial y}=x^2y-2x+\frac{\partial k}{\partial y}$$

But from equation (ii)

$$\frac{\partial\psi}{\partial y}=-u=-\frac{y^3}{3}-2x+x^2y$$

Comparing the value of $\frac{\partial\psi}{\partial y}$, we get

$$\frac{\partial\psi}{\partial y}=x^2y-2x+\frac{\partial k}{\partial y}=-\frac{y^3}{3}-2x+x^2y$$

$$\frac{\partial k}{\partial y}=-\frac{y^3}{3}$$

Integrating we get,

$$k=\int\left(-\frac{y^3}{3}\right)dy=\frac{-y^4}{4\times3}=\frac{-y^4}{12}$$

Substitute this value in (iii), we get

$$\psi=\frac{x^2y^2}{2}-2xy-\frac{x^4}{12}-\frac{y^4}{12}$$

4. The velocity components in two dimensional flow field are: $u = \frac{y^3}{3} + 2x - x^2y$ and $v = xy^2 - -2y - \frac{x^3}{3}$. Show that this component represents a possible case of an irrotational flow.

Solution:

Given: $u = \frac{y^3}{3} + 2x - x^2y$

$$\frac{\partial u}{\partial x} = 2 - 2xy$$

$$\frac{\partial u}{\partial y} = \frac{3y^2}{3} - x^2 = y^2 - x^2$$

Also $v = xy^2 - 2y - \frac{x^3}{3}$

$$\frac{\partial v}{\partial y} = 2xy - 2$$

$$\frac{\partial v}{\partial x} = y^2 - \frac{3x^2}{3} = y^2 - x^2$$

(i) For two dimensional flow, continuity equation is $\frac{\partial u}{\partial x} + \frac{\partial v}{\partial y} = 0$

Substitute the value of $\frac{\partial u}{\partial x}$ and $\frac{\partial u}{\partial y}$, we get

$$\frac{\partial u}{\partial x} + \frac{\partial u}{\partial y} = 2 - 2xy + 2xy - 2 = 0$$

$\therefore$ It is a possible case of fluid flow

(ii) Rotation, $\omega_z = \frac{1}{2}\left(\frac{\partial v}{\partial x} - \frac{\partial u}{\partial y}\right) = \frac{1}{2}\left[\left(y^2 - x^2\right) - \left(y^2 - x^2\right)\right] = 0$

$\therefore$ Rotation is zero, which means it is case of irrotational flow.

5. An open circular cylinder of 15 cm diameter and 100 cm long contains water up to a height of 70 cm. Find the maximum speed at which the cylinder is to be rotated about its vertical axis depth becomes zero.

Solution:

Given:

Diameter of cylinder = 15 cm, $R = \frac{15}{2} = 7.5$ cm

Lenght of cylinder = 100 cm

Initial height of water = 70 cm

When axis depth is zero, teh depth of paraboloid = 100 cm

Using the relation, $Z = \frac{\omega^2 R^2}{2g}$

$$100 = \frac{\omega^2 \times 7.5^2}{2 \times 9.81}$$

$$\omega = 59.05 \text{ rad/s}$$

Speed N is given by $\omega = \frac{2\pi N}{60}$

$$N = \frac{60 \times \omega}{2\pi} = 563.88 \text{ rpm}$$

7

DIMENSIONAL ANALYSIS AND SIMILARITIES

Course Contents

7.1 Introduction

7.2 Dimensional Homogeneity

7.3 Method of Dimensional Analysis

7.4 Similitude

7.5 Dimensionless Numbers

7.6 Model Law

7.7 Classification of model

7.8 Solved Numerical

7.1 Introduction

- Dimensional analysis is a method of dimensions. It is a mathematical technique used in research work for design and for conducting model tests.

• Application of Dimensional analysis

- To derive formula which representing the relationship between the physical quantities that affect a given physical phenomenon.
- To check dimensional homogeneity of any equation of fluid flow.
- To provide scaling laws that can convert data from small model to large model.
- To develop dimensionless number which is useful to compare the different problems.

• Dimensions

- A dimension is measure by which physical quantity is expressed. A unit is a method of attaching a number to the quantitative dimension.
- For example: The length is a dimension of variables as distance, displacement, height etc.

• Fundamental Dimensions OR Fundamental Quantity

- All the physical quantities are measured by comparison, which is made with respect to arbitrary fixed value. This comparison is always made with respect to some arbitrary fixed value.
- Length L, mass m, and time T are three fixed dimensions. If in any problem heat is involved then temperature θ is also taken as fixed dimension.
- These fixed dimensions are called ***fundamental dimensions*** or ***primary quantity***.

• Secondary OR Derived Quantity

- The quantities which are expressed in terms of the fundamental or primary quantities are known as derived or secondary quantities.
- These are those quantities which possess more than one fundamental dimensions.
- <u>For example</u>: Velocity is denoted by distance per unit time (L/T), density is denoted by mass per unit volume (M/L^3).
- So velocity, density become as secondary quantities.

• Dimensional Variable

- It is quantities which vary during the given case.

• Dimensional Constant

- It is quantities which held constant during a given case. But it may vary from case to case.

Table 7.1 Quantities used in fluid mechanics

Sr. No.	Quantity	Symbol	Units (SI)	Dimensions (MLT System)
A	**Fundamental**			
1	Mass	m	Kg	$M^1L^0T^0$
2	Length	L	m	$M^0L^1T^0$
3	Time	T	Sec	$M^0L^0T^1$
B	**Geometric**			
1	Area	A	m^2	$M^0L^2 T^0$
2	Volume	V	m^3	$M^0L^3 T^0$
3	Roughness	K	m	$M^0L^1 T^0$
C	**Kinematic**			
1	Linear Velocity	u, v	m/s	$M^0L^1T^{-1}$
2	Angular Velocity	ω	rad/s	$M^0L^0T^{-1}$
3	Rotational speed	N	rev/min	$M^0L^0 T^{-1}$
4	Acceleration	a	m/s^2	$M^0L^1T^{-2}$
5	Angular Acceleration	α	rad/s^2	$M^0L^0 T^{-2}$
6	Acceleration due to Gravity	g	m/s^2	$M^0L^1T^{-2}$
7	Discharge	Q	m^3/sec	$M^0L^3T^{-1}$
8	Kinematic Viscosity	ν	m^2/sec	$M^0L^2T^{-1}$
D	**Dynamic**			
1	Force / Resistance/Weight/Thrust	F/R/W/T	N (kg-m/s^2)	$M^1L^1T^{-2}$
2	Specific Weight	w	N/ m^3	$M^1L^{-2}T^{-2}$
3	Density	ρ	Kg/ m^3	M^1L^{-3}
4	Pressure	p	N/m^2	$M^1L^{-1}T^{-2}$
5	Shear stress	τ	N/m^2	$M^1L^{-1}T^{-2}$
6	Dynamic Viscosity	μ	Kg/m-sec	$M^1L^0T^{-2}$
7	Modulus of elasticity	E,K	N/m^2	$M^1L^{-1}T^{-2}$
8	Surface tension	σ	N/m	$M^1L^{-1}T^{-2}$
9	Work, Energy	W, E	N-m (Joule)	$M^1L^2T^{-2}$
10	Power	P	Watt (J/sec)	$M^1L^2T^{-3}$

11	Torque	T	Nm	$M^1L^2T^{-2}$
12	Momentum	M	Kg m/s	$M^1L^1T^{-1}$

7.2 Dimensional Homogeneity

- Dimensional homogeneity means the dimensions of each terms in an equation on both the sides equal.
- Thus if the dimension of the each term on both sides of equation are the same equation is known as ***dimensionally homogeneous equation***.
- The power of fundamental dimension (M,L,T) on both side of equation will be identical for a dimensionally homogeneous equation.

Example :

let us consider the equation $V = \sqrt{2gH}$

$$\rightarrow \text{ Dimension of L.H.S.} = V = \frac{L}{T} = LT^{-1}$$

$$\rightarrow \text{ Dimension of R.H.S.} = \sqrt{2gH} = \sqrt{\frac{L}{T^2} \times L} = \sqrt{\frac{L^2}{T^2}} = \frac{L}{T} = LT^{-1}$$

$$\therefore \text{ Dimension of L.H.S.} = \text{Dimension of R.H.S.} = LT^{-1}$$

$$\therefore \text{ Equation } V = \sqrt{2gH} \text{ is dimensionally homogeneous.}$$

7.3 Method of Dimensional Analysis

- If the number of variables involved in a physical phenomenon are known, then the relation among the variable can be determined by following methods.
  1. Rayleigh's method
  2. Buckingham's π theorem

Rayleigh's method

- This method is used for determining the expression for a variable which depends upon maximum three or four variable only.
- If the number of independent variables becomes more than four, then it is very difficult to find the expression for the dependent variable.
- Let X is a variable, which depends on X_1, X_2, and X_3 variables. Then according to the Rayleigh's method, X is a function of X_1, X_2, and X_3 mathematically it is written as

$$X = KX_1^a \cdot X_2^b \cdot X_3^c$$

Where K is constant and a, b, and c are arbitrary powers.

- The value of a, b and c are obtain by comparing the power of fundamental dimension on both sides. Thus expression is obtained for dependent variables.

Buckingham's π Theorem

- The Rayleigh's method of dimensional analysis becomes more laborious if the variables are more than number of fundamental dimensions (M, L, T).This difficulties are overcome by using Buckingham's π - theorem.

Theorem

- **"If there are n variables (independent and dependent variables) in a physical phenomenon and if these variables contain m fundamental dimensions (M, L, T) then variables are arranged in to (n-m) dimensionless number. Each term is called π term."**
- Let X_1, X_2, X_3 ..... X_n are the variables involved in physical problems. Let X_1 be the dependent variable and X_2, X_3 ..... X_n are the independent variable on which X_1 depends. Then X_1 is a function of X_2, X_3 ..... X_n and mathematically it is expressed as

$$X_1 = f(X_2, X_3 \ldots\ldots\ldots X_n) \qquad \cdots\cdots\cdots(1)$$

- Equation (1) can also be written as

$$f_1(X_2, X_3 \ldots\ldots\ldots X_n) = 0 \qquad \cdots\cdots\cdots(2)$$

- Equation (2) is a dimensionally homogeneous equation.
- It contains n variables. If there are m fundamental dimensions then according to the Buckingham's π Theorem, equation (2) can be written in term of number of dimensionless group or π terms in which number of π-term is equal to (n - m).Hence equation (2) becomes as

$$f(\pi_1, \pi_2, \ldots, \pi_{n-m}) = 0 \qquad \cdots\cdots\cdots(3)$$

- Each of π-term is dimensionless and is independent of the system.
- Division or multiplication by a constant does not change the character of the π-term. Each π-term contains m+1 variables, where m is the number of fundamental dimensions and is also called repeating variables.
- Let in the above case X_2, X_3 and X_4 are repeating variables if the fundamental dimension m(M, L, T)=3. Then each π-term is written as

$$\left.\begin{aligned} \pi_1 &= X_2^{a_1} X_3^{b_1} X_4^{c_1} X_1 \\ \pi_2 &= X_2^{a_2} X_3^{b_2} X_4^{c_2} X_5 \\ &\vdots \\ \pi_{n-m} &= X_2^{a_{n-m}} X_3^{b_{n-m}} X_4^{c_{n-m}} X_n \end{aligned}\right\} \qquad \cdots\cdots\cdots\cdots\cdots(4)$$

- Each equation is solved by the principle of dimensional homogeneity and value of a_1, b_1, c_1 etc. are obtained. These values are substituted in equation (4) and values of π_1, π_2, π_3, ...π_{n-m} are obtained. These values of π's are substituted in equation (3). The final equation for the phenomenon is obtained by expressing any one of the π-terms as a function of others as

$$\pi_1 = \phi\left[\pi_2, \pi_3, \cdots \pi_{n-m}\right]$$
$$\pi_2 = \phi_1\left[\pi_1, \pi_3, \cdots \pi_{n-m}\right]$$

Method of Selecting Repeating Variables

- The number of repeating variables are equal to the number of fundamental dimensions of the problem. The choice of repeating variable is governed by the following cosiderations :
  1. As far as possible, the dependent variable should not be selected as repeating variable.
  2. The repeating variables should be choosen in such a way that one variable contains geometric property, other variable contains flow property and third variable contain fluid property.
     - Variables with Geometric property are
       I. Length, l
       II. Diameter d
       III. Height, h etc
     - Variables with flow property are
       I. Velocity, V
       II. Acceleration etc.
     - Variables with fluid property
       I. μ
       II. ρ etc
  3. Repeating variables selected should not from a dimensionless group
  4. The repeating variable together must have the same number of fundamental dimensions
  5. No two repeating variables should have the same dimensions
- In most of fluid mechanics problems, the choice of repeating variable may be
  I. d, μ ,ρ
  II. l, ν, ρ
  III. l, ν, μ
  IV. d, ν, μ

7.4 Similitude-Types of similarities

- Similitude is define as the similarity between the model and its prototype in every aspect, which means that model and prototype have similar properties or model and prototype are completely similar.
- Three type of similarity must exist between the model and prototype. They are…
  1. Geometric Similarity
  2. Kinematic Similarity
  3. Dynamic Similarity

7.4.1 Geometric Similarity

- Geometric similarity is said to be exist between the model and prototype if the ratio of all corresponding linear dimension in the model and prototype are equal.

Let $L_m = \text{Length of model}$ $b_m = \text{Breath of the model}$

$D_m = \text{Diameter of model}$ $A_m = \text{Area of model}$

$V_m = \text{Volume of model}$

and $L_p, b_p, D_p, A_p, V_p = \text{corresponding values of prototype.}$

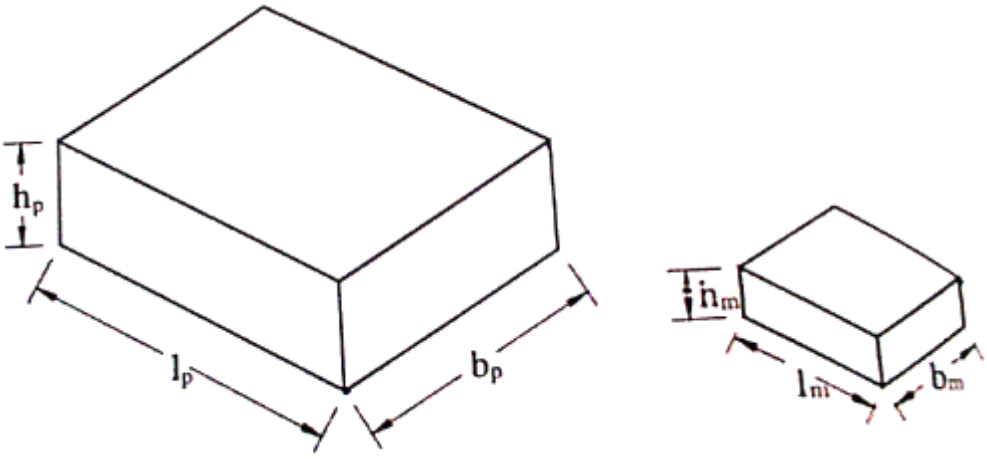

(a) Prototype *(b) Model*

Fig. 7.1 Geometric similarity

- For geometric similarity between the model and prototype, we must have the relation,

$$\frac{L_p}{L_m} = \frac{b_p}{b_m} = \frac{D_p}{D_m} = L_r \qquad \cdots\cdots\cdots\cdots(1)$$

Where L_r is called scale ratio.

- For area's ratio and volume's ratio relation should be as below:

$$\frac{A_p}{A_m} = \frac{L_p \times b_p}{L_m \times b_m} = L_r \times L_r = L_r^2$$

$$\frac{V_p}{V_m} = \left(\frac{L_p}{L_m}\right)^3 = \left(\frac{b_p}{b_m}\right)^3 = \left(\frac{D_p}{D_m}\right)^3$$

7.4.2 Kinematic similarity

- Kinematic similarity means the similarity of motion between model and prototype.
- Thus kinematic similarity is said to be exist between the model and prototype if the ratio of the velocity and acceleration at the corresponding points in the model at the corresponding points in the prototype are same.
- Since velocity and acceleration are vector quantities, hence not only the ratio of magnitude of velocity and acceleration at the corresponding points in the model and prototype should be same; but the direction of velocity and acceleration at the corresponding points in the model and prototype also should be parallel.

Let V_{p1} = Velocity of fluid at point 1 in prototype
V_{p2} = Velocity of fluid at point 2 in prototype
a_{p1} = Acceleration of fluid at point 1 in prototype
a_{p2} = Acceleration of fluid at point 2 in prototype
V_{m1}, V_{m2}, a_{m1}, a_{m2} = Corresponding values at the corresponding points of fluid velocity and acceleration in the model.

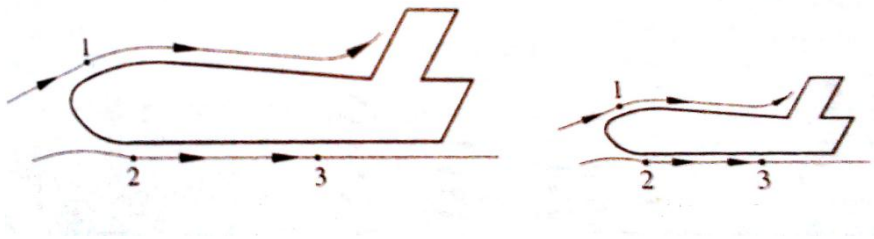

(a) Prototype *(b) Model*

Fig. 7.2 Kinematic similarity

- For kinematic similarity we must have

$$\frac{V_{p1}}{V_{m1}} = \frac{V_{p2}}{V_{m2}} = V_r$$ Where V_r = velocity ratio

- For acceleration we must have

$$\frac{a_{p1}}{a_{m1}} = \frac{a_{p2}}{a_{m2}} = a_r$$ Where a_r = acceleration ratio

- Also the direction of the velocity in the model and prototype should be same.

7.4.3 Dynamic similarity

- Dynamic similarity means the similarity of forces between the model and prototype.
- Thus dynamic similarity is said to be exits between model and prototype if the ratios of corresponding forces acting at the corresponding points are equal.
- Also the direction of corresponding forces at the corresponding points should be same.

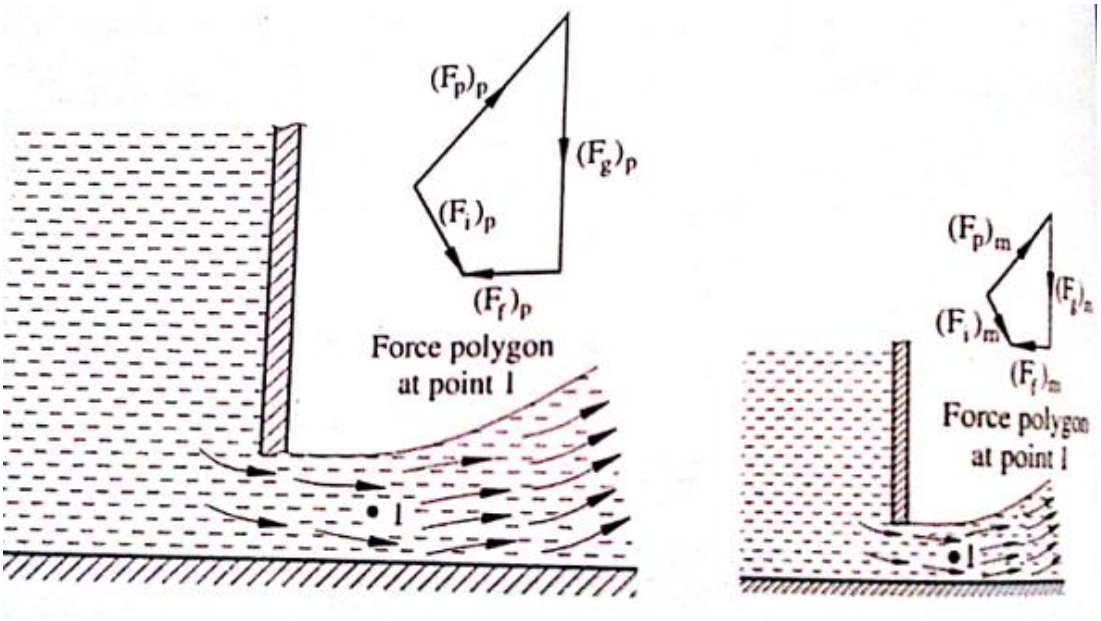

(a) Prototype *(b) Model*

Fig. 7.3 Geometric similarity

$(F_i)_p$ = Inertia force at a point in prototype

$(F_v)_p$ = Viscous force at a point in prototype

$(F_g)_p$ = Gravity force at a point in prototype

$(F_i)_m, (F_i)_m, (F_i)_m$ are corresponding values of force at the corresponding point in model.

Then for dynamic simillarity, we have

$$\frac{(F_i)_p}{(F_i)_m} = \frac{(F_v)_p}{(F_i)_m} = \frac{(F_g)_p}{(F_g)_m} \qquad \text{Where } F_r = \text{force ratio}$$

- Also the direction of corresponding forces at the corresponding forces at corresponding points in the model and prototype should be same.

7.5 Dimensionless Numbers

- Dimensionless numbers are those numbers which are obtained by dividing the inertia force by viscous force or gravitational force or pressure force or surface tension force or elastic force.
- As this is a ratio of one force to another force, it will be a dimensionless numbers. These dimensionless numbers are also called non-dimensional parameters.
- The followings are the important dimensionless numbers:

1. Reynold's number
2. Froude's number
3. Euler's number
4. Weber's number
5. Mach's number

1. Reynold's number

- It is define as the ratio of inertia force of flowing fluid and viscous force of the fluid.
- It is denoted by R_e.

$$R_e = \frac{\text{Inertia force}(F_i)}{\text{Viscous force}(F_v)}$$

$$= \frac{\rho A V^2}{\mu \frac{V}{L} A}$$

$$= \frac{\rho V L}{\mu}$$

$$= \frac{VL}{\upsilon} \quad (\because \upsilon = \text{Kinematic viscosity})$$

$$\boxed{R_e = \frac{VD}{\upsilon} = \frac{\rho V D}{\mu}} \quad \text{(In case of pipe flow)}$$

Significance

- Reynold'snumber (Re) measures the relative magnitude of the inertia force to viscous force occurring in the flow.
- Higher the inertia Re, greater the inertia effect. Smaller the Re, greater the viscous stresses.
- The Reynold number is the criteria of dynamic similarity in the flow situations where the viscous force predominates.
- In this case dynamic similarity is said to be exist between the model and prototype when Re of model and prototype is same.
- Examples of such situation:
  I. Flow of incompressible fluid in a pipe.
  II. Motion of submarine completely in closed pipe.

2. Froude's number

- It is define as the square root of the ratio of the inertia force and gravitational force.
- It id denoted by F_r .

$$F_r = \sqrt{\frac{\text{Inertia force}(F_i)}{\text{Gravity force}(F_g)}}$$

$$= \sqrt{\frac{\rho A V^2}{\rho A L g}}$$

$$= \sqrt{\frac{V^2}{Lg}}$$

$$\boxed{\therefore F_r = \frac{V}{\sqrt{Lg}}}$$

Significance:

- If the gravitational force is of prime importance , dynamic similarity is said to be exists between the model and prototype when the Froud number for model and prototype is same.
- Example of such situation
    I. Flow of liquid jet from the orifice
    II. Flow over notches, weirs of a dam.

3. Mach number

- It is define as the square root of the ratio of the inertia force to elastic force.
- It is denoted by M.

$$M = \sqrt{\frac{\text{Inertia force}(F_i)}{\text{Elastic force}(F_e)}}$$

$$M = \sqrt{\frac{\rho A V^2}{K L^2}}$$

$$M = \sqrt{\frac{\rho L^2 V^2}{K L^2}}$$

$$M = \frac{V}{\sqrt{K/\rho}}$$

$$\boxed{\therefore M = \frac{V}{C}} \quad \text{where } C = \sqrt{K/\rho} = \text{Speed of sound wave in flowing medium}$$

Significance:

- The Mach number signifies predominance of effect of compressibility of fluid.
- Higher Mach number signifies the predominance of effect of compressibility of fluid.
- The mach number is important in compressible flow problems at higher velocities such as
    I. Aerodynamic testing
    II. Water hammer problem

4. Weber number

- It is define as the square root of ratio of the inertia force to surface tension force.
- It is denoted by W_e.

$$W_e = \sqrt{\frac{\text{Inertia force}(F_i)}{\text{Surface tension force}(F_s)}}$$

$$= \sqrt{\frac{\rho A V^2}{\sigma L}}$$

$$= \sqrt{\frac{\rho L^2 V^2}{\sigma L}}$$

$$\boxed{\therefore W_e = \frac{V}{\sqrt{\sigma / \rho l}}}$$

Significance:

- The Weber number is important in case where the surface tension force is predominating force, dynamic similarity is said to exist when weber number of model and prototype is equal.
- Practical application of weber number is as under:
  - I. Capillarity tube action
  - II. Flow of blood in veins and arteries

5. Euler's number

- It is define as the square root of ratio of inertia force to pressure force.
- It is denoted by E_u.

$$E_u = \sqrt{\frac{\text{Inertia force}(F_i)}{\text{Pressure force}(F_p)}}$$

$$= \sqrt{\frac{\rho A V^2}{pA}}$$

$$\boxed{\therefore E_u = \frac{V}{\sqrt{p / \rho}}}$$

Significance:

- The Euler number is signifies when pressure force is predominates.
- Examples of such flow situations are as
  - I. Flow through pipe
  - II. Discharge through orifice and mouthpieces.

7.6 Model Laws or Law of Similarity

- Law on which the models are designed for dynamic similarity are known as Model laws or similarity laws.
- Model laws are as
    1. Reynold's model law
    2. Froud model law
    3. Euler model law
    4. Weber model law
    5. Mach model law

1. Reynold's model law

- For the flow where in addition to inertia force, the various forces are predominant, the models are designed for dynamic similarity on Reynold number. This is called Reynold law.
- Mathematically,

$$(R_e)_{model} = (R_e)_{prototype}$$

$$\therefore \frac{\rho_m V_m L_m}{\mu_m} = \frac{\rho_p V_p L_p}{\mu_p}$$

- **Application of Reynold's model law**
  - Complete enclosed flow: Flow through pipe and plates
  - Viscous flow
  - Flow in flowmeter in pipe: Venturimeter, orificemeter etc.
  - Incompressible fluid flow In pipe
  - Completely submerge flow: Aeroplanes, submarines

2. Froude model law

- For the flow where in addition to inertia force, the gravity force are predominant, the model are designed for dynamic similarity on Froude number. This is called Froude law.
- Mathematically,

$$(F_r)_{model} = (F_r)_{prototype}$$

$$\therefore \frac{V_m}{\sqrt{L_m g}} = \frac{V_p}{\sqrt{L_p g}}$$

$$\boxed{\therefore \frac{V_m}{\sqrt{L_m}} = \frac{V_p}{\sqrt{L_p}}}$$

- **Application od Froude model law**
  - Free surface flow: open channel flow, Spillways, weirs, notches.
  - Flow of jet from an orifice or nozzle.
  - Where fluids of different densities flow over another.

3. Euler's model law

- For the flow where in addition to inertia force, the pressure force are predominant, the model are designed for dynamic similarity on Euler number. This is called Euler's model law.
- Mathematically,

$$(E_u)_{model} = (E_u)_{prototype}$$

$$\therefore \frac{V_m}{\sqrt{p_m / \rho_m}} = \frac{V_p}{\sqrt{p_p / \rho_p}}$$

- **Application of Euler's model law**
  - Enclosed fluid flow where the turbulent is fully developed(viscous force are negligible, also gravity and surface tension force absent).
  - Where phenomenon of cavitation take places.

4. Weber model law

- For the flow where in addition to inertia force, the surface tension effect predominant, the model are designed for dynamic similarity on weber number. This is called Weber's model law.
- Mathematically,

$$(W_e)_{model} = (W_e)_{prototype}$$

$$\therefore \frac{V_m}{\sqrt{\sigma_m / \rho_m L_m}} = \frac{V_p}{\sqrt{\sigma_p / \rho_p L_p}}$$

- **Application of weber model law**
  - Capillarity rise in narrow passage.
  - Capillarity movement of water in soil.
  - Thin sheet of liquid flows over a surface.

5. Mach model law

- For the flow where in addition to inertia force, the force due to elastic compression are predominant, the model are designed for dynamic similarity on Mach number. This is called Mach model law.
- Mathematically,

$$(M)_{model} = (M)_{prototype}$$

$$\therefore \frac{V_m}{\sqrt{K_m / \rho_m}} = \frac{V_p}{\sqrt{K_p / \rho_p}}$$

- **Application of Mach model law**
  - Aerodynamic testing.
  - Water hammer problem.
  - Supersonic flow – flow of aeroplane and projectiles through air.

7.7 Classification of models

- The hydraulic models are classified as :
    - Undistorted model
    - Distorted model

7.7.1. Undistorted model

- These are those models which are geometrically similar to their prototypes or in other words if the scale ratio for the linear dimensions of the model and its prototype is same, model is called undistorted model.
- The behavior of the prototype can be easily predicted from the result of undistorted model.

7.7.2. Distorted model

- A model is said to be distorted if it is not geometrically similar to its prototype.
- For a distorted model different scale ratios for the linear dimensions are adopted.
- For example, in case of rivers, reservoirs etc., two different scale ratios, one for horizontal and other for vertical dimensions are taken. Thus the model of river and reservoir will become a distorted model.
- If for the river, the horizontal and vertical scale ratios are taken to be same so that the model is undistorted model, then the depth of water in model of riverwill be very-very small which may not be measure accurately.
- Thus following are the advantages of distorted model:
    1. The vertical dimension of the model can be measured accurately.
    2. The cost of model can be reduced.
    3. Turbulent flow in the model can be maintained.

7.8 Solved Numerical

Example 1. Find the expression for the power P, developed by pump when P depends upon the head H, the discharge Q and specific weight w of a fluid.

Solution: Power P is a function of……

I. Head H
II. Discharge Q
III. Specific weight w

$$P = KH^aQ^bw^c \qquad \cdots\cdots\cdots(1)$$

Where $K = \text{Dimensionless constant}$

→ Substituting dimensions on the both sides of equation

$$\therefore ML^2T^{-3} = K\left(M^0L^1T^0\right)^a\left(M^0L^3T^{-1}\right)^b\left(M^1L^{-2}T^{-2}\right)^c$$

→ Equating the power on the both sides of equation

Power of M	$1 = c$	$\therefore c = 1$
Power of L	$2 = a + 3b - 2c$	$\therefore a = 2 - 3b + 2c = 2 - 3 + 2 = 1$
Power of T	$-3 = -b - 2c$	$\therefore b = 3 - 2c = 3 - 2 = 1$

→ Substituting the value of a,b and c in equation (1)

$$\boxed{\therefore P = KHQw}$$

Example 2. The efficiency η of a fan depends on density ρ, dynamic viscosity μ of a fluid, angular velocity ω, diameter D of the rotor and discharge Q. Express η in terms of dimensionless parameters using Buckingham's π -theorem.

Solution:

→ η is function of ρ, μ, ω, D and Q

$$\therefore \eta = f(\rho, \mu, \omega, D, Q)$$

$$\therefore f_1(\eta, \rho, \mu, \omega, D, Q) = 0 \qquad \cdots\cdots(1)$$

→ Here total no of variables $n = 6$

no of fundamental dimensions $m = 3$

$\therefore$ no of π terms $= n - m = 6 - 3 = 3$

→ Let these π terms are π_1, π_2, π_3

So equation (1) can be written as

$$f_1(\pi_1, \pi_2, \pi_3) = 0 \qquad \cdots\cdots(2)$$

→ no. of repeating variable $= m = 3$

Let these repeating variables are D, ω, ρ

$$\therefore \pi_1 = D^{a_1}\omega^{b_1}\rho^{c_1}\eta$$

$$\therefore \pi_2 = D^{a_2}\omega^{b_2}\rho^{c_2}\mu$$

$$\therefore \pi_3 = D^{a_3}\omega^{b_3}\rho^{c_3}Q$$

→ First π term (π_1):

$$\therefore \pi_1 = D^{a_3}\omega^{b_3}\rho^{c_3}\eta$$

$$\therefore \left(M^0L^0T^0\right) = \left(M^0L^1T^0\right)^{a_1}\left(M^0L^0T^{-1}\right)^{b_1}\left(M^1L^{-3}T^0\right)^{c_1}\left(M^0L^0T^0\right)$$

Equating power on both sides of equation

Power of M	$0 = c_1 + 0$	$\therefore c_1 = 0$
Power of L	$0 = a_1 + 0$	$\therefore a_1 = 0$
Power of T	$0 = -b_1 + 0$	$\therefore b_1 = 0$

Substituting the value of a_1, b_1 and c_1 in equation of π_1

$$\therefore \pi_1 = D^0\omega^0\rho^0\eta = \eta$$

$$\boxed{\therefore \pi_1 = \eta}$$

→ Second π term (π_2):

$$\therefore \pi_2 = D^{a_2}\omega^{b_2}\rho^{c_2}\mu$$

$$\therefore \left(M^0L^0T^0\right) = \left(M^0L^1T^0\right)^{a_2}\left(M^0L^0T^{-1}\right)^{b_2}\left(M^1L^{-3}T^0\right)^{c_2}\left(M^1L^{-1}T^{-1}\right)$$

Equating power on both sides of equation

Power of M	$0 = c_2 + 1$	$\therefore c_2 = -1$
Power of L	$0 = a_2 - 3c_2 - 1$	$\therefore a_2 = 3c_2 + 1 = -3 + 1 = -2$
Power of T	$0 = -b_2 - 1$	$\therefore b_2 = -1$

Substituting the value of a_2, b_2 and c_2 in equation of π_2

$$\therefore \pi_2 = D^{-2}\omega^{-1}\rho^{-1}\mu = \frac{\mu}{D^2\omega\rho}$$

$$\boxed{\therefore \pi_2 = \frac{\mu}{D^2\omega\rho}}$$

→ Third π term (π_3):

$$\therefore \pi_3 = D^{a_3}\omega^{b_3}\rho^{c_3}Q$$

$$\therefore \left(M^0L^0T^0\right) = \left(M^0L^1T^0\right)^{a_3}\left(M^0L^0T^{-1}\right)^{b_3}\left(M^1L^{-3}T^0\right)^{c_3}\left(M^0L^3T^{-1}\right)$$

Equating power on both sides of equation

Power of M	$0 = c_3$	$\therefore c_3 = 0$
Power of L	$0 = a_3 - 3c_3 + 3$	$\therefore a_3 = 3c_3 - 3 = -3$
Power of T	$0 = -b_3 - 1$	$\therefore b_3 = -1$

→ Substituting the value of a_3, b_3 and c_3 in equation of π_3

$$\therefore \pi_3 = D^{-3}\omega^{-1}\rho^0 Q = \frac{Q}{D^3\omega}$$

$$\boxed{\therefore \pi_3 = \frac{Q}{D^3\omega}}$$

→ Substituting the value of π_1, π_2 and π_3 in equation (2)

$$\therefore f_1\left(\eta, \frac{\mu}{D^2\omega\rho}, \frac{Q}{D^3\omega}\right) = 0$$

$$\boxed{\therefore \eta = \phi\left(\frac{\mu}{D^2\omega\rho}, \frac{Q}{D^3\omega}\right)}$$

8

VISCOUS FLOW

Course Contents

8.1 Reynold's number and Reynold's experiments

8.2 Flow through circular pipe-Hagen Poiseville Law

8.3 Flow of viscous fluid between two parallel fixed plates

8.4 Power absorbed in viscous fluid

8.5 Movement of piston in dash pot

8.6 Method of measurement of viscosity

8.1. Reynolds number and Reynolds experiment

- **Reynolds number** is the ratio of inertia force to viscous force.
- It is measure of the importance of viscous resistance in controlling the flow of a fluid. A low Reynolds number indicates that viscosity is a dominant factor; a high Reynolds number indicates that its effect is small.
- For example, the flow in a circular pipe will be laminar for values of Reynolds number below 2000 and will be turbulent for higher values. So that by stating the Reynolds number, we can specify the type of flow.
- In laminar flow the effect of viscosity is predominant and hence this flow is also called **viscous flow.**

Reynolds experiment

- The set up consists of a tank full of water. A glass tube is fitted at the bottom of the tank such that the tube is inserted in the water as shown.
- The other end of the glass tube has a valve with a measuring tank. The rate of flow could be controlled by a valve at the outlet, and a fine filament of dye (coloured liquid) injected at the entrance to the tube. The water level in the tank is maintained constant without disturbances. The movement of the dye is observed for every flow rate.

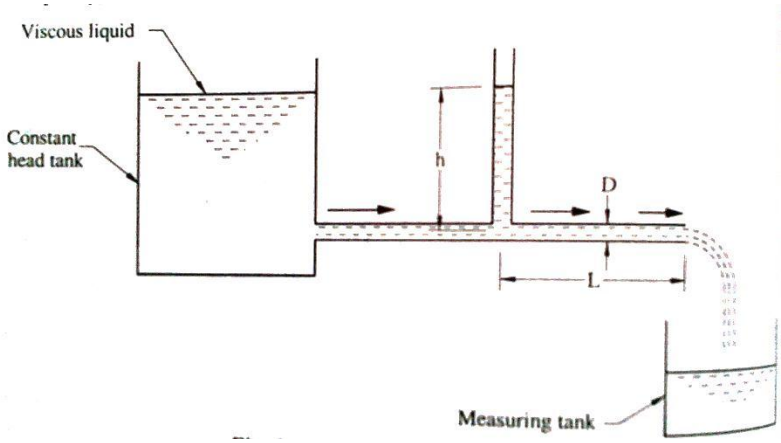

Fig. 8.1 Reynold Experiment

- The following observations were made by Reynold:
  At low velocities, it was found that the dye filament remained intact throughout the length of tube as shown in fig. This shows that the particles of water moved in parallel lines. This type of flow is known as laminar, viscous or streamline flow.
- In this flow, the particles of fluid moving in an orderly manner and retaining the same relative position in successive cross-sections.

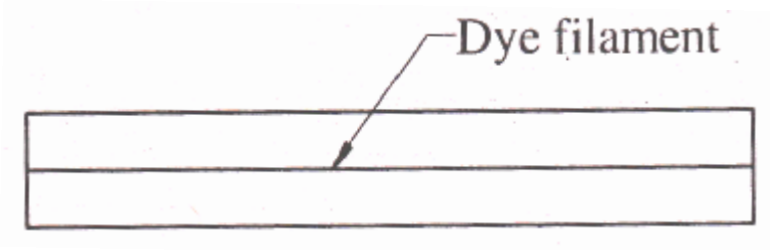

(a) Laminar flow

- (B)With the increase of velocity of flow, the dye filament was no longer a straight line but it became a wavy one as shown in Fig. This shows that flow is no longer laminar. This was a transitional state.

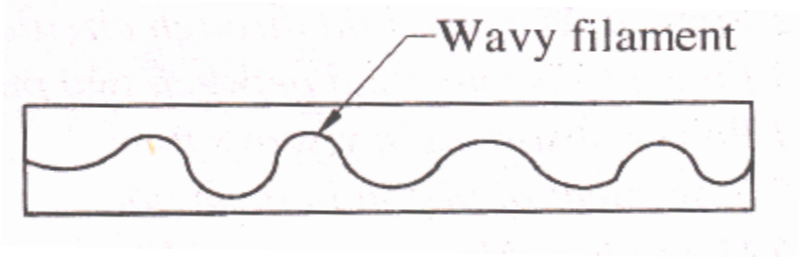

(b)Transition flow

- (C) As the velocity in the tube was further increased by opening the outlet valve, a point was eventually reached at which the dye filament at first began to oscillate and then broke up so that the dye was diffused over the whole cross-section as shown in Fig.(c)

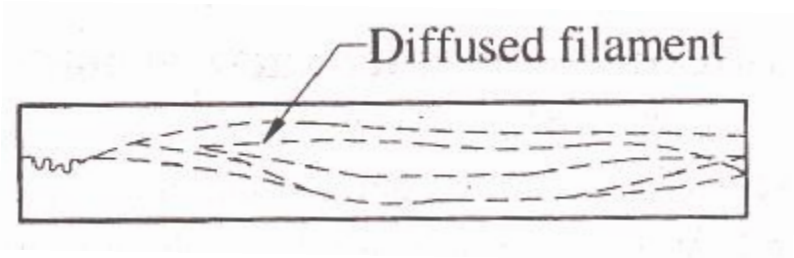

(c) Turbulent flow

8.2. Flow of viscous fluid through circular pipe- HAGEN POISEVILLE

- For analyzing laminar or viscous flow of an incompressible fluid through a circular pipe of radius R, consider the equilibrium of forces on a small concentric cylindrical fluid element of radius *r* and length *dx.* If *'p'* is the intensity of pressure on the face *AB,* then the intensity of pressure on face CD will be $\left(p+\frac{\partial p}{\partial x}dx\right)$. Then the forces acting on the fluid element are
  i. The Pressure force, $p\times\pi r^2$ on face AB
  ii. The pressure force $\left(p+\frac{\partial p}{\partial x}dx\right)\times\pi r^2$ on face CD
  iii. The shear force, $\tau\times 2\pi r dx$ on the surface of fluid element.

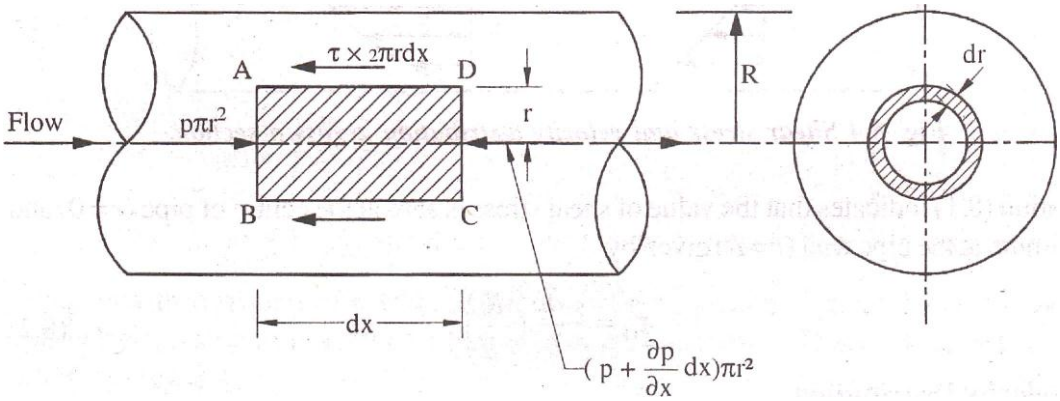

Fig. 8.2 viscous flow through circular pipe

- As there is no acceleration , hence summation of all forces in the direction of flow must be zero.

$$p\pi r^2 - \left(p + \frac{\partial p}{\partial x}dx\right) \times \pi r^2 - \tau \times 2\pi r dx = 0$$

$$\therefore -\frac{\partial p}{\partial x}dx\pi r^2 - \tau \times 2\pi r dx = 0$$

$$\therefore -\frac{\partial p}{\partial x}r - 2\tau = 0$$

$$\boxed{\therefore \tau = -\frac{\partial p}{\partial x}\frac{r}{2}} \quad \cdots\cdots\cdots(1)$$

- The shear stress across the section varies with 'r' as $\frac{\partial p}{\partial x}$ across the section is constant. Hence shear stress distribution across a section is linear as shown in fig.

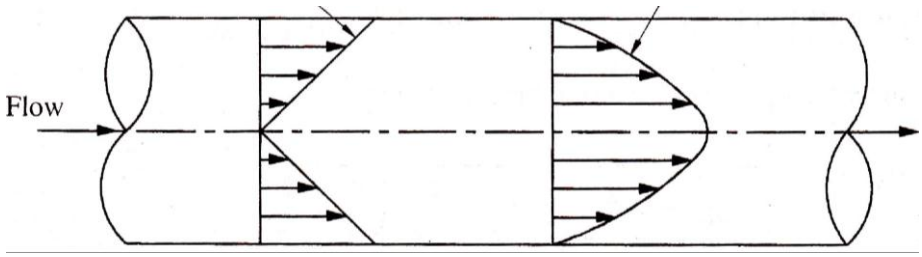

Fig. 8.3 Shear stress and velocity distribution

- Equation 1 indicates that the value of shear stress is zero at centre of pipe (r=0) and maximum at the pipe wall (r = R) given by

$$\tau_o = -\frac{\partial p}{\partial x}\left(\frac{R}{2}\right)$$

Velocity distribution

- To obtained velocity distribution across a section, the value of shear stress $\tau = \mu\frac{du}{dy}$ is substitute in equation (1).
- But in equation $\tau = \mu\frac{du}{dy}$, y is measured from pipe wall. Hence

$$y = R - r$$

$$\therefore dy = -dr$$

$$\therefore \tau = \mu\frac{du}{dy} = -\mu\frac{du}{dr}$$

- Substituting this value in equation (1)

$$\therefore -\mu\frac{du}{dr} = -\frac{\partial p}{\partial x}\frac{r}{2}$$

$$\therefore \frac{du}{dr} = \frac{1}{2\mu}\frac{\partial p}{\partial x}r$$

- Integrating w.r.t 'r'

$$\therefore u = \frac{1}{4\mu}\frac{\partial p}{\partial x}r^2 + C \quad \cdots\cdots\cdots(2)$$

- Where C is constant of integration and its value is obtained from the boundary condition that at r=R, u=0

$$\therefore 0 = \frac{1}{4\mu}\frac{\partial p}{\partial x}R^2 + C$$

$$\therefore C = -\frac{1}{4\mu}\frac{\partial p}{\partial x}R^2$$

- Substituting this value in equation (2)

$$\therefore u = \frac{1}{4\mu}\frac{\partial p}{\partial x}r^2 - \frac{1}{4\mu}\frac{\partial p}{\partial x}R^2$$

$$\boxed{\therefore u = -\frac{1}{4\mu}\frac{\partial p}{\partial x}\left[R^2 - r^2\right]} \qquad \cdots\cdots\cdots(3)$$

- In equation (3), value of μ, $\frac{\partial p}{\partial x}$,and R are constant, which means velocity varies with the square of r.
- Thus equation (3) is of parabola. This shows that the velocity distribution across the section of pipe is parabolic. This is shown in fig.

Ratio of Maximum Velocity to Average Velocity

- The velocity is maximum, when r = 0 in equation (3). Thus maximum velocity is obtained as

$$\therefore u_{max} = -\frac{1}{4\mu}\frac{\partial p}{\partial x}R^2 \qquad \cdots\cdots\cdots(4)$$

- The average velocity is obtained by dividing the discharge of fluid across the section by the area of the pipe.
- The discharge across the section is obtained by considering the flow through a circular ring element of radius r and thickness dr as shown in fig.
- The fluid flowing per second through this elementary ring

$$dQ = \text{Velocity at a radius } r \times \text{Area of ring element}$$

$$= u \times 2\pi r \times dr$$

$$= -\frac{1}{4\mu}\frac{\partial p}{\partial x}\left[R^2 - r^2\right] \times 2\pi r \times dr$$

$$\therefore Q = \int_0^R dQ$$

$$\therefore Q = \int_0^R -\frac{1}{4\mu}\frac{\partial p}{\partial x}\left[R^2 - r^2\right] \times 2\pi r \times dr$$

$$= -\frac{1}{4\mu}\left(-\frac{\partial p}{\partial x}\right) \times 2\pi \int_0^R \left[R^2 - r^2\right] r dr$$

$$= -\frac{1}{4\mu}\left(-\frac{\partial p}{\partial x}\right) \times 2\pi \int_0^R \left[R^2 r - r^3\right] dr$$

$$= \frac{1}{4\mu}\left(-\frac{\partial p}{\partial x}\right) \times 2\pi \left[\frac{R^2 r^2}{2} - \frac{r^4}{4}\right]_0^R$$

$$= \frac{1}{4\mu}\left(-\frac{\partial p}{\partial x}\right) \times 2\pi \left[\frac{R^4}{2} - \frac{R^4}{4}\right]$$

$$= \frac{1}{4\mu}\left(-\frac{\partial p}{\partial x}\right) \times 2\pi \frac{R^4}{4}$$

$$= \frac{\pi}{8\mu}\left(-\frac{\partial p}{\partial x}\right) R^4$$

$\therefore$ Average velocity, $\bar{u} = \dfrac{Q}{\text{Area}}$

$$= \frac{\frac{\pi}{8\mu}\left(-\frac{\partial p}{\partial x}\right) R^4}{\pi R^2}$$

$$\therefore \bar{u} = \frac{1}{8\mu}\left(-\frac{\partial p}{\partial x}\right) R^2 \qquad \cdots\cdots\cdots(5)$$

- Dividing equation (4) by equation (5)

$$\frac{u_{max}}{\bar{u}} = \frac{-\frac{1}{4\mu}\frac{\partial p}{\partial x} R^2}{\frac{1}{8\mu}\left(-\frac{\partial p}{\partial x}\right) R^2}$$

$$\boxed{\therefore \frac{u_{max}}{\bar{u}} = 2}$$

- So Ratio of maximum velocity to average velocity = 2

Drop of Pressure for a given Length (L) of a pipe

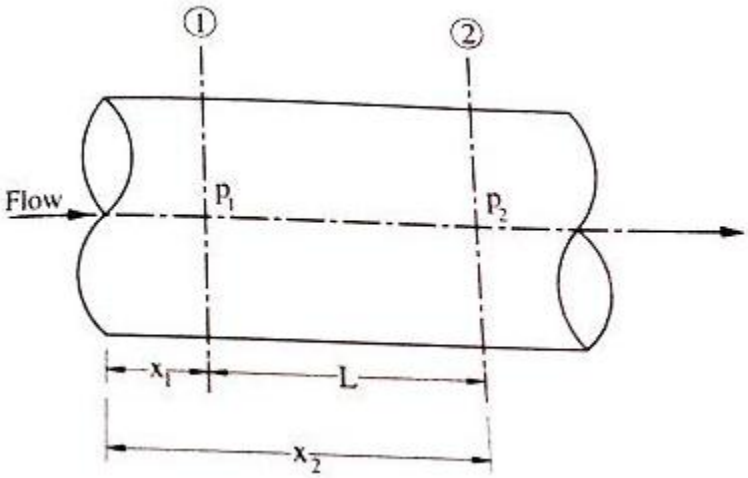

Fig. 8.4

- From equation (5), average velocity is given by,

$$\bar{u} = \frac{1}{8\mu}\left(-\frac{\partial p}{\partial x}\right)R^2$$

$$\therefore -\frac{\partial p}{\partial x} = \frac{8\mu\bar{u}}{R^2}$$

- Integrating above equation w.r.t 'x',

$$-\int_2^1 \partial p = \int_2^1 \frac{8\mu\bar{u}}{R^2}\partial x$$

$$\therefore -[p_1 - p_2] = \frac{8\mu\bar{u}}{R^2}[x_1 - x_2]$$

$$\therefore [p_1 - p_2] = \frac{8\mu\bar{u}}{R^2}[x_2 - x_1]$$

$$= \frac{8\mu\bar{u}}{R^2}L$$

$$= \frac{8\mu\bar{u}}{\left(D/2\right)^2}L$$

$$\therefore [p_1 - p_2] = \frac{32\mu\bar{u}L}{D^2} \quad \text{Where } p_1 - p_2 = \text{drop of pressure}$$

$$\therefore \text{Loss of pressure head} = \frac{p_1 - p_2}{\rho g}$$

$$\therefore \quad \boxed{\frac{p_1 - p_2}{\rho g} = h_f = \frac{32\mu\bar{u}L}{\rho g D^2}}$$

- This equation is called ***Hagen- Poiseuille Formula.***

8.3. Flow of viscous fluid between two parallel fixed plates

- Consider two parallel fixed plates kept at a distance 't' apart as shown in fig. A viscous fluid is flowing between these two plates from left to right.
- Consider a fluid element of length Δx and thickness Δy at a distance y from a lower fixed plate.
- If p is the intensity of pressure at on the face AB of the fluid element then intensity of pressure on the face CD will be $\left(p + \frac{\partial p}{\partial x}\Delta x\right)$.
- Let τ is the shear stress acting on the face BC then shear stress on face AD will be $\left(\tau + \frac{\partial \tau}{\partial y}\Delta y\right)$.
- If width of the element in the direction perpendicular to paper is unity then the forces acting on the fluid element are:
  1. The pressure force $p \times \Delta y \times 1$ on face AB.
  2. The pressure force, $\left(p + \frac{\partial p}{\partial x}\Delta x\right)\Delta y \times 1$ on face CD.

3. The shear force $\tau \times \Delta x \times 1$ on face BC.
4. The shear force $\left(\tau + \frac{\partial \tau}{\partial y}\Delta y\right)\Delta x \times 1$ on face AD.

– For steady and uniform flow, there is no acceleration and hence the resultant force in the direction of flow is zero.

$$\therefore \quad p \times \Delta y \times 1 - \left(p + \frac{\partial p}{\partial x}\Delta x\right)\Delta y \times 1 - \tau \times \Delta x \times 1 + \left(\tau + \frac{\partial \tau}{\partial y}\Delta y\right)\Delta x \times 1 = 0$$

$$\therefore \quad -\frac{\partial p}{\partial x}\Delta x \Delta y + \frac{\partial \tau}{\partial y}\Delta y \Delta x = 0$$

$$\therefore \quad -\frac{\partial p}{\partial x} + \frac{\partial \tau}{\partial y} = 0 \qquad (\because \text{ Dividing by } \Delta x \Delta y)$$

$$\therefore \quad \frac{\partial p}{\partial x} = \frac{\partial \tau}{\partial y} \qquad \cdots\cdots\cdots(1)$$

Velocity distribution:

– To obtain velocity distribution across a section, value of shear stress $\tau = \mu \frac{du}{dy}$ from the Newton's law of viscosity for laminar flow is substituted in equation 1.

$$\therefore \quad \frac{\partial p}{\partial x} = \frac{\partial}{\partial y}\left(\mu \frac{du}{dy}\right) = \mu \frac{\partial^2 u}{\partial y^2}$$

$$\therefore \quad \frac{\partial^2 u}{\partial y^2} = \frac{1}{\mu}\frac{\partial p}{\partial x}$$

Integrating this equation w.r.t. 'y',

$$\therefore \quad \frac{\partial u}{\partial y} = \frac{1}{\mu}\frac{\partial p}{\partial x} y + C_1$$

Integrating again

$$\therefore \quad u = \frac{1}{\mu}\frac{\partial p}{\partial x}\frac{y^2}{2} + C_1 y + C_2 \qquad \cdots\cdots\cdots(2)$$

– Here C1 and C2 are constant for integration. Their values are obtained from the two boundary conditions that is (1) at y=0, u=0 (2) at y=t, u=0.

Substitution of $y = 0, u = 0$ in equation 2 gives

$$0 = 0 + C_1 \times 0 + C_2 \Rightarrow C_2 = 0$$

Substitution of $y = t, u = 0$ in equation 2 gives

$$0 = \frac{1}{\mu}\frac{\partial p}{\partial x}\frac{r^2}{2} + C_1 t + 0$$

$$\therefore C_1 = -\frac{1}{\mu}\frac{\partial p}{\partial x}\frac{t^2}{2 \times t}$$

$$\therefore C_1 = -\frac{1}{2\mu}\frac{\partial p}{\partial x} t$$

– Substituting the value of C_1 and C_2 in equation 2.

$$\therefore \quad u = \frac{1}{2\mu}\frac{\partial p}{\partial x}y^2 + y\left(-\frac{1}{2\mu}\frac{\partial p}{\partial x}t\right)$$

$$\boxed{\therefore \quad u = -\frac{1}{2\mu}\frac{\partial p}{\partial x}\left[ty - y^2\right]} \qquad \cdots\cdots\cdots(3)$$

- In the above equation $\mu, \frac{\partial p}{\partial x}$ and t are constant. It means u varies from the square of y. Hence above equation is the equation of the parabola. Hence velocity distribution across a section of the parallel plate is parabolic. The velocity distribution is shown in fig. below.

Ratio of maximum Velocity to Average Velocity

- The velocity is maximum, when $y = t/2$. Substituting this value in equation (3)

$$U_{max} = -\frac{1}{2\mu}\frac{\partial p}{\partial x}\left[t \times \frac{t}{2} - \left(\frac{t}{2}\right)^2\right]$$

$$= -\frac{1}{2\mu}\frac{\partial p}{\partial x}\left[\frac{t^2}{2} - \frac{t^2}{4}\right]$$

$$= -\frac{1}{2\mu}\frac{\partial p}{\partial x}\frac{t^2}{4}$$

$$= -\frac{1}{8\mu}\frac{\partial p}{\partial x}t^2 \qquad \cdots\cdots\cdots(4)$$

- The average velocity is obtained by dividing the discharge (Q) across the section by the area of the section $t \times 1$. And discharge is obtained by considering the rate of flow of fluid through the strip of thickness dy and integrating it.
- The rate of flow through strip is….

$$dQ = \text{Velocity at a distance } y \times \text{Area of strip}$$

$$= -\frac{1}{2\mu}\frac{\partial p}{\partial x}\left[ty - y^2\right] \times dy \times 1$$

$$\therefore \quad \text{Total discharge } Q = \int_0^t dQ$$

$$= \int_0^t -\frac{1}{2\mu}\frac{\partial p}{\partial x}\left[ty - y^2\right]dy$$

$$= -\frac{1}{2\mu}\frac{\partial p}{\partial x}\left[\frac{ty^2}{2} - \frac{y^3}{3}\right]_0^1$$

$$= -\frac{1}{2\mu}\frac{\partial p}{\partial x}\left[\frac{t^3}{2} - \frac{t^3}{3}\right]$$

$$= -\frac{1}{2\mu}\frac{\partial p}{\partial x}\frac{t^3}{6}$$

$$\therefore Q = -\frac{1}{12\mu}\frac{\partial p}{\partial x}t^3$$

$$\therefore \bar{u} = \frac{Q}{Area} = \frac{-\frac{1}{12\mu}\frac{\partial p}{\partial x}t^3}{t \times 1} = -\frac{1}{12\mu}\frac{\partial p}{\partial x}t^2 \qquad \cdots\cdots\cdots(5)$$

– Dividing the equation (4) by equation (5)

$$\frac{U_{max}}{\bar{u}} = \frac{-\frac{1}{8\mu}\frac{\partial p}{\partial x}t^2}{-\frac{1}{12\mu}\frac{\partial p}{\partial x}t^2} = \frac{12}{8}$$

$$\boxed{\therefore \frac{U_{max}}{\bar{u}} = \frac{3}{2}}$$

Drop of pressure head for a given length

– From equation (5)

$$\bar{u} = -\frac{1}{12\mu}\frac{\partial p}{\partial x}t^2$$

$$\therefore \frac{\partial p}{\partial x} = -\frac{12\mu\bar{u}}{t^2}$$

– Integrating this equation w.r.t. x, we get,

$$\int_2^1 dp = \int_2^1 -\frac{12\mu\bar{u}}{t^2}dx$$

$$\therefore p_1 - p_2 = -\frac{12\mu\bar{u}}{t^2}[x_1 - x_2]$$

$$= \frac{12\mu\bar{u}}{t^2}[x_2 - x_1]$$

$$\therefore p_1 - p_2 = \frac{12\mu\bar{u}}{t^2}L$$

– If h_f is drop of pressure head then

$$\boxed{h_f = \frac{p_1 - p_2}{\rho g} = \frac{12\mu\bar{u}L}{\rho g t^2}}$$

Shear stress distribution

– It is obtained by substituting the value of u from equation (3)

$$\tau = \mu\frac{du}{dy}$$

$$\therefore \tau = \mu\frac{d}{dy}\left[-\frac{1}{2\mu}\frac{\partial p}{\partial x}\left(ty - y^2\right)\right]$$

$$= \mu\left[-\frac{1}{2\mu}\frac{\partial p}{\partial x}(t-2y)\right]$$

$$\therefore \tau = -\frac{1}{2}\frac{\partial p}{\partial x}(t-2y)$$

- In above equation $\frac{\partial p}{\partial x}$ and t are constant. Hence τ varies linearly with y. Shear stress is maximum when y=0 or at the wall of the plates. Shear stress is zero when y = t/2 that is the centre line between the two plates. Maximum shear stress is given by

$$\boxed{\tau_0 = -\frac{1}{2}\frac{\partial p}{\partial x}t}$$

8.4. Power Absorb in Viscous Flow

- For the lubrication of the machine parts, oil is used. Flow of oil in bearing is examples of viscous flow.
- If the highly viscous oil is used for lubrication of bearing, it will offer greater resistance and thus a greater power loss will take place. But if light oil is used, a required film between the rotating part and rotating metal surface will not be possible.
- Here the wear of the two surfaces will take place. Hence an oil of correct viscosity should be used for lubrication.
- The power required to overcome the viscous resistance in the following cases will be determined:
    1. Viscous resistance of Journal Bearing
    2. Viscous resistance of Foot- Step Bearing
    3. Viscous Resistance of Collar Bearing

1. Viscous resistance of Journal Bearing

- Consider a shaft of diameter D rotating in a journal bearing. The clearance between shaft and journal bearing is filled with viscous oil.
- The oil film is contact with shaft rotating at the same speed as that of the shaft while the oil film in contact with the journal bearing is stationary.
- Thus the viscous resistance will be offered by oil to the rotating shaft.

Let $N = \text{Speed of Shaft in RPM}$

$t = \text{Thickness of oil film}$

$L = \text{Length of oil film}$

$\therefore$ Angular speed of shaft , $\omega = \frac{2\pi N}{60}$

$\therefore$ Tangential speed of shaft $= \omega \times R$

$$\therefore \quad V = \frac{2\pi N}{60} \times \frac{D}{2} = \frac{\pi DN}{60}$$

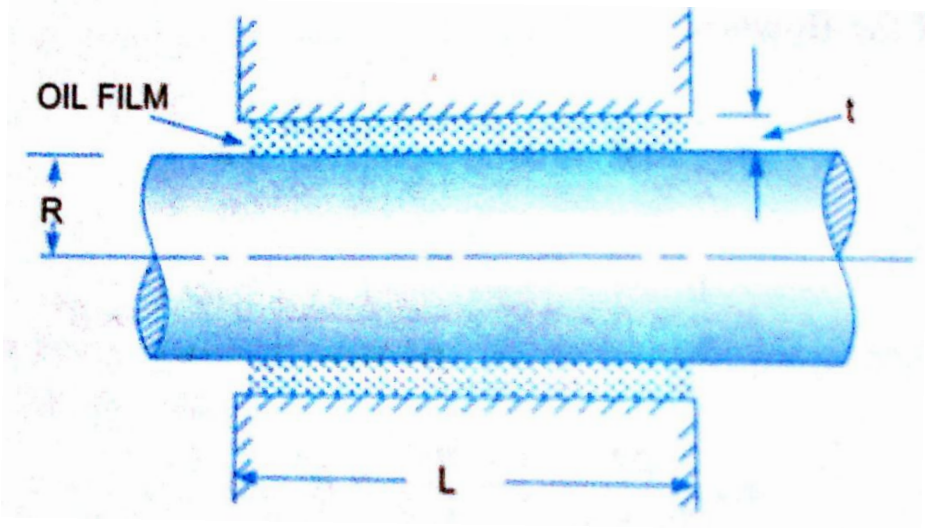

Fig. 8.5 Journal Bearing

The shear stress in oil is given by $\tau = \mu \frac{du}{dy}$

- As the thickness of the oil film is very small, the velocity distribution in the oil film can be assumed as linear.

Hence $$\frac{du}{dy} = \frac{V-0}{t} = \frac{V}{t} = \frac{\pi DN}{60 \times t}$$

$$\therefore \tau = \mu \frac{\pi DN}{60 \times t}$$

$\therefore$ The shear force or viscous resistance $= \tau \times$ Area of surface of shaft

$$= \mu \frac{\pi DN}{60 \times t} \times \pi DL$$

$$= \mu \frac{\pi D^2 NL}{60 \times t}$$

$\therefore$ The torque required to overcome the Viscous resistance

$$T = \text{Viscous resistance} \times \frac{D}{2}$$

$$= \mu \frac{\pi D^2 NL}{60t} \times \frac{D}{2} = \frac{\mu \pi^2 D^3 NL}{120t}$$

$\therefore$ The power absorbed in overcoming the viscous resistance

$$P = \frac{2\pi NT}{60} = \frac{2\pi N}{60} \times \frac{\mu \pi^2 D^3 NL}{120t}$$

$$\boxed{\therefore P = \frac{\mu \pi^3 D^3 N^2 L}{60 \times 60 \times t} \text{ watts}}$$

2. Viscous resistance of Foot- Step Bearing

- Fig shows the foot step bearing, in which vertical shaft is rotating.
- An oil film between the bottom surface of the shaft and bearing is provided, to reduce the tear and wear.
- The viscous resistance is offered by the oil to the shaft . In this case radius of the surface of the shaft in contact with the oil is not constant as in case of the journal bearing.
- Hence the viscous resistance in the foot step bearing is calculated by considering elementary circular ring of radius r and thickness dr as shown in fig.

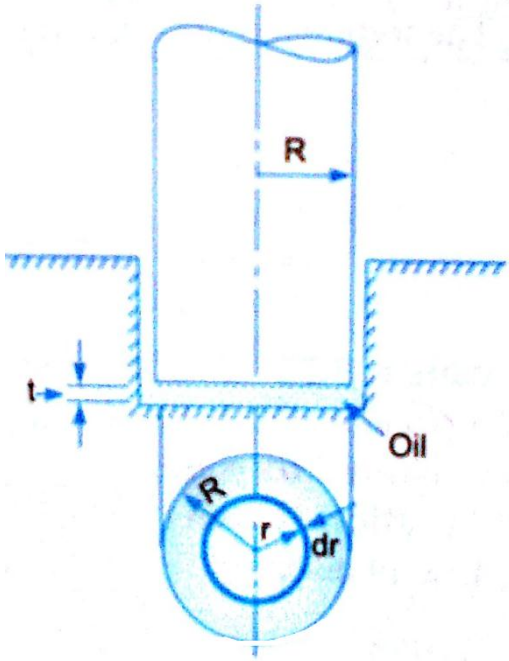

Fig.8.6 Foot Step Bearing

Let $N = \text{Speed of Shaft in RPM}$

$t = \text{Thickness of oil film}$

$L = \text{Length of oil film}$

Area of the elementary ring $= 2\pi r dr$

Now, shear stress is given by $\tau = \mu \frac{du}{dy} = \mu \frac{V-0}{t} = \frac{V}{t}$

Where V is tangential velocity of shaft at a radius r and is equal to

$$\omega \times R = \frac{2\pi N}{60} \times r$$

$\therefore$ Shear force on the ring $= dF = \tau \times$ Area of elementry ring

$$= \mu \times \frac{2\pi N}{60} \times \frac{r}{t} \times 2\pi r \times dr$$

$$= \frac{\mu}{15} \frac{\pi N r^2}{t} dr$$

$\therefore$ The Torque required to overcome the viscous resistance

$$dT = dF \times r$$

$$= \frac{\mu}{15}\frac{\pi N r^2}{t} dr \times r$$

$$= \frac{\mu}{15}\frac{\pi N r^3}{t} dr$$

$\therefore$ The Torque required to overcome the viscous resistance

$$T = \int_0^R dT$$

$$= \int_0^R \frac{\mu}{15}\frac{\pi^2 N r^3}{t} dr$$

$$= \frac{\mu}{15}\pi^2 N \int_0^R r^3 dr$$

$$= \frac{\mu}{15}\pi^2 N \left[\frac{r^4}{4}\right]_0^R$$

$$= \frac{\mu}{15}\pi^2 N \frac{R^4}{4}$$

$$= \frac{\mu}{60t}\pi^2 N R^4$$

$\therefore$ Power absorbed $\quad P = \frac{2\pi NT}{60}$

$$P = \frac{2\pi N}{60} \times \frac{\mu}{60t}\pi^2 N R^4$$

$$\boxed{\therefore \quad P = \frac{\mu \pi^3 N^2 R^4}{60 \times 30t}}$$

3. Viscous Resistance of Collar Bearing

– Fig shows the collar bearing where the face of the collar bearing is separated from the bearing surface by an oil film of uniform thickness.

Let $\quad N = \text{Speed of the shaft in RPM}$

$R_1 = \text{Internal radius of the collar}$

$R_2 = \text{External radius of the collar}$

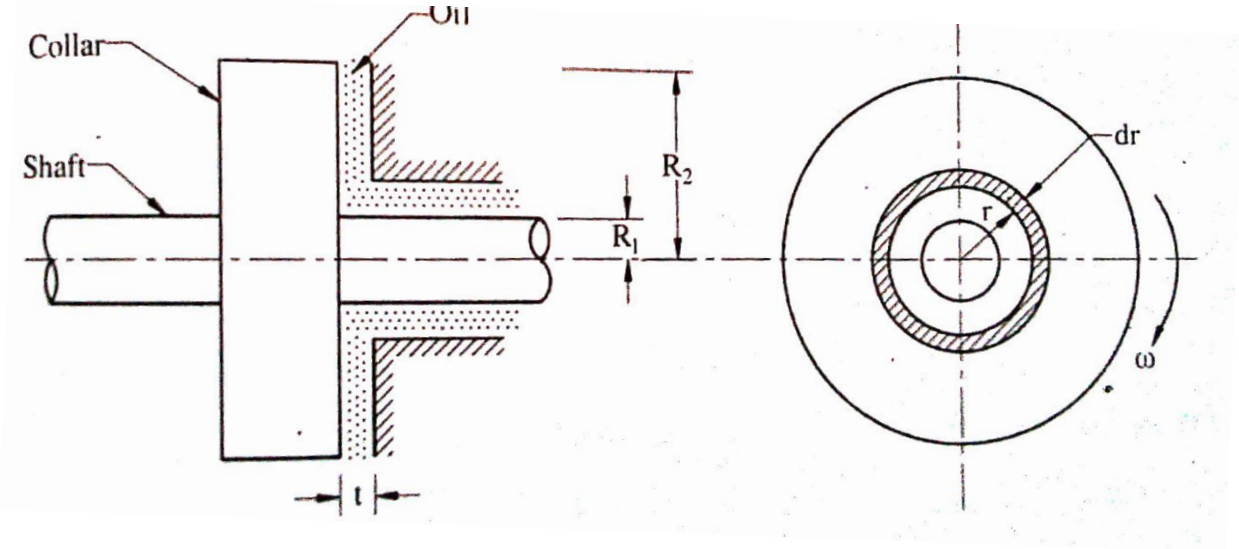

Fig. 8.7 Collar Bearing

- Consider an elementary circular ring of radius 'r' and width dr of the bearing surface.
- Then the torque (dT) require to overcome the viscous resistance on the elementary circular ring is given by

$$dT = \frac{\mu}{15}\frac{\pi N r^3}{t}dr$$

∴The Torque required to overcome the viscous resistance

$$T = \int_{R_1}^{R_2} dT$$

$$= \int_{R_1}^{R_2} \frac{\mu}{15}\frac{\pi^2 N r^3}{t}dr$$

$$= \frac{\mu}{15}\pi^2 N \int_{R_1}^{R_2} r^3 dr$$

$$= \frac{\mu}{15}\pi^2 N \left[\frac{r^4}{4}\right]_{R_1}^{R_1}$$

$$= \frac{\mu}{15}\pi^2 N \left[\frac{R_2^{\,4}}{4} - \frac{R_1^{\,4}}{4}\right]$$

$$= \frac{\mu}{60t}\pi^2 N \left[R_2^{\,4} - R_1^{\,4}\right]$$

∴Power absorbed $P = \frac{2\pi NT}{60}$

$$P = \frac{2\pi N}{60} \times \frac{\mu}{60t}\pi^2 N \left[R_2^{\,4} - R_1^{\,4}\right]$$

$$\boxed{\therefore \quad P = \frac{\mu \pi^3 N^2}{60 \times 30t}\left[R_2^{\,4} - R_1^{\,4}\right] \text{Watts}}$$

Movement of Piston in Dash-Pot

– Consider a piston moving in a vertical dash-pot containing oil as shown in fig.

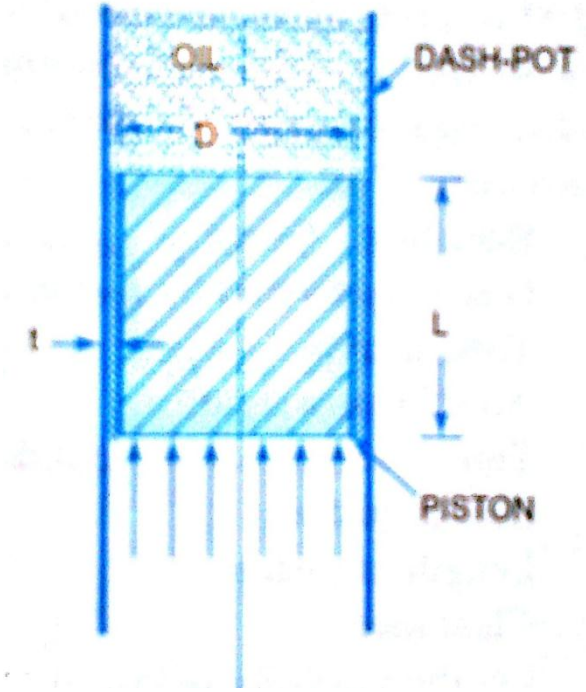

Fig. 8.8

Let $D = \text{Diameter of piston}$

$L = \text{Length of piston}$

$W = \text{Weight of piston}$

$\mu = \text{Viscosity of oil}$

$V = \text{Velocity of piston}$

$\bar{u} = \text{Average velocity of oil in the clearance}$

$l = \text{learance between the dash} - \text{pot and piston}$

$\Delta p = \text{Difference of pressure intensities between the two end of the piston}$

– The flow of oil through clearance is similar to the viscous flow between to parallel plates. The difference of pressure for parallel plates for length 'L' is given by

$$\Delta p = \frac{12\mu\bar{u}L}{t^2} \qquad \ldots\ldots\ldots(1)$$

– Also the difference of pressure at the two end of piston is given by,

$$\Delta p = \frac{\text{weight of piston}}{\text{Area of piston}} = \frac{W}{\frac{\pi}{4}D^2} = \frac{4W}{\pi D^2} \qquad \ldots\ldots\ldots(2)$$

– Equating equation 1 and 2

$$\frac{12\mu\bar{u}L}{t^2} = \frac{4W}{\pi D^2}$$

$$\therefore \bar{u} = \frac{4W}{\pi D^2} \times \frac{t^2}{12\mu L} = \frac{Wt^2}{3\pi\mu L D^2} \qquad \ldots\ldots\ldots(3)$$

- V is the velocity of piston or the velocity of oil in dash-pot in contact with the piston. The rate of flow of oil in dash-pot

$$= \text{Velocity} \times \text{Area of dash pot}$$

$$= V \times \frac{\pi}{4} D^2$$

- Rate of flow through clearance $= \text{Velocity through clearance} \times \text{area of clearance}$

$$= \bar{u} \times \pi D t$$

- According to continuity equation, rate of flow through clearance must be equal to rate of flow through dash-pot.

$$\bar{u} \times \pi D t = V \times \frac{\pi}{4} D^2$$

$$\therefore \quad \bar{u} = V \times \frac{\pi}{4} D^2 \times \frac{1}{\pi D t}$$

$$\therefore \quad \bar{u} = \frac{VD}{4t} \qquad \ldots\ldots\ldots(4)$$

- Equating equation (3) and (4)

$$\frac{Wt^2}{3\pi\mu L D^2} = \frac{VD}{4t}$$

$$\boxed{\therefore \quad \mu = \frac{4Wt^3}{3\pi\mu L D^3 V}}$$

8.5. Methods of Determination of Coefficient Of Viscosity

- Following are the experimental method of determining co-efficient of viscosity of a liquid:
  1. Capillary tube method
  2. Falling sphere resistance method
  3. By rotating cylinder method
  4. Orifice type viscometer
- Apparatus used for determining the viscosity of a liquid is called viscometer

1. Capillary tube method

- In capillary tube method viscosity of a liquid is calculated by measuring the pressure difference for a given length of capillary tube The Hagen Poiseuille Law is used for calculating viscosity.
- Fig shows the capillarity tube viscometer. Viscosity is to be determined is filled in a constant head tank. The liquid is maintained at constant temperature and is allowed to pass through a capillary tube from the constant head tank.

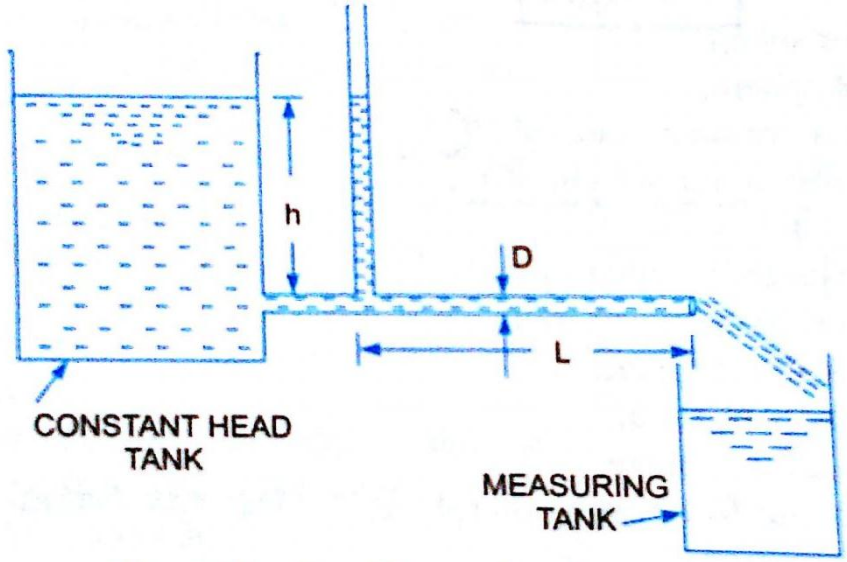

Fig. 8.9 Capillarity tube viscometer

- Then liquid is conducted in a measuring tank for a given time. Then the rate of liquid collected in the tank per second is determined. Pressure head h is measured at a point far away from the tank as shown in figure.

  h = difference of pressure head for given length L

  D = Diameter of capillary tube

  L = length of tube for which difference of pressure head is known

  $\rho =$ density of fluid

  $\mu =$ coefficient of viscosity.

Using Hagen – poiseuille's formula $h = \dfrac{32\mu \bar{u} L}{\rho g D^2}$

But $\bar{u} = \dfrac{Q}{\text{Area}} = \dfrac{Q}{\frac{\pi}{4} D^2}$

Where Q is the rate of flow through tube

$$\therefore h = \frac{32\mu \dfrac{Q}{\frac{\pi}{4} D^2} L}{\rho g D^2} = \frac{128 \mu Q L}{\pi \rho g D^2}$$

$$\therefore \mu = \frac{\pi \rho g h D^4}{128 Q L}$$

- Measurement of D should be done very accurately.

2. Falling Sphere Resistance method

- **Theory** : This method is based on Stoke's law According to which drag force F on a small sphere moving with a constant velocity U through Viscous fluid of viscosity μ for viscous condition is given by

$$F = 3\pi\mu U d$$

$d =$ diameter of sphere

u = velocity of sphere

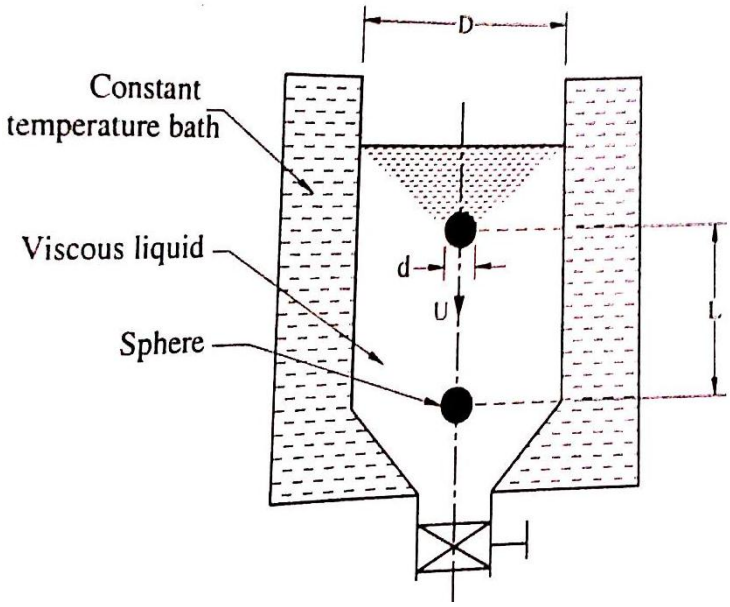

Fig. 8.10 Falling sphere resistance method

- When sphere attain constant velocity U, the drag force is the difference between weight of a sphere and buoyant force acting on it.

L = distance travelled by Sphere in viscous fluid

$t =$ time taken by sphere to cover distance L

$\rho_s =$ density of sphere

$\rho_f =$ density of fluid

W = weight of a sphere

$F_b =$ buoyant force acting on spear

- constant velocity of sphere,

$$U = \frac{L}{t}$$

- Weight of sphere

$$W = \text{Volume} \times \text{density of sphere} \times g$$

$$= \frac{\pi}{6} d^3 \times \rho_s \times g$$

- Buoyant force

$$F_b = \text{Weight of fluid displaced}$$

$$= \text{Volume of liquid dispalced} \times \text{density of fluid} \times g$$

$$= \frac{\pi}{6} d^3 \times \rho_f \times g \quad (\because \text{Volume of liquid displaced} = \text{Volume of sphere})$$

- For equilibrium

$$\text{Drag force} = \text{Weight of sphere} - \text{Buoyant force}$$

$$F = W - F_B$$

- Substituting the value of F, W and F_B, We get

$$3\pi\mu U d = \frac{\pi}{6} d^3 \times \rho_s \times g - \frac{\pi}{6} d^3 \times \rho_f \times g$$

$$\therefore\ 3\pi\mu U d = \frac{\pi}{6} d^3 g\left[\rho_s - \rho_f\right]$$

$$\therefore \quad \mu = \frac{\frac{\pi}{6} d^3 g\left[\rho_s - \rho_f\right]}{3\pi U d}$$

$$\boxed{\therefore \quad \mu = \frac{g d^2}{18U}\left[\rho_s - \rho_f\right]}$$

- Hence in equation value of d, U, ρ_s and ρ_f are known and Hence the viscosity of liquid can be determined.
- **Method**: this method consists of a tall vertical transparent cylindrical tank which is filled with Liquid whose viscosity is to be determined
- This tank is surrounded by another transparent tank to Keep the temperature of a liquid in the cylindrical tank to be constant
- A spherical ball of small diameter d is placed on the surface of liquid. provision is made to release this ball after a short distance of travel, the ball attain a constant velocity. The time to travel a known vertical distance between two fixed mark on the cylindrical tank is noted to calculate the constant velocity U of the ball.
- Then with the known value of d, ρ_s and ρ_f viscosity of fluid μ is calculated by using equation.

3. Rotating Cylinder Method

- This method consists of two rotating cylinder as shown in fig. The narrow space between the two cylinders is filled with the liquid whose viscosity is to be determined.
- The inner cylinder is held stationary by means of a torsional spring while outer cylinder is rotated at constant angular speed ω . The torque T acting on inner cylinder is measured by the torsional spring.
- The torque on inner cylinder must be equal and opposite to the torque applied on the outer cylinder.

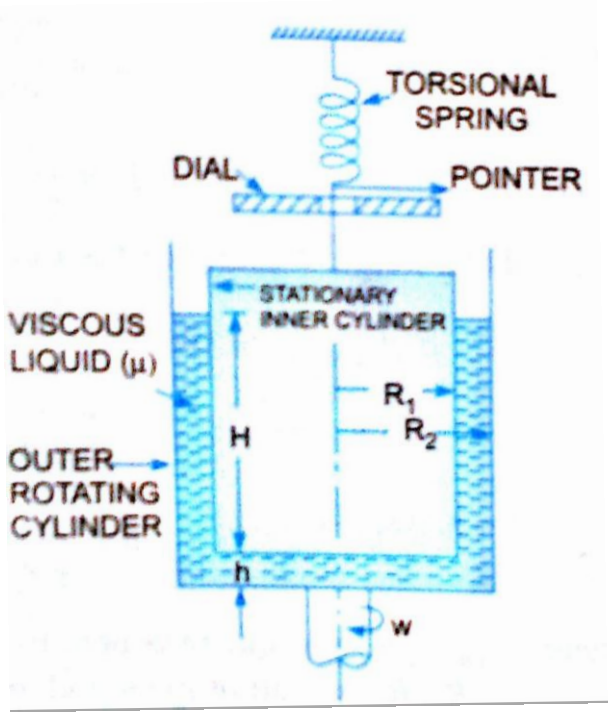

Fig. 8.11 Rotating Cylinder Viscometer

- The torque applied on the outer cylinder is due to viscous resistance provided by liquid in the annulus space and at the bottom of the inner cylinder.

  Let $\omega =$ angular speed of outer cylinder.

  Tangential (Peripheral) speed of outer cylinder $= \omega \times R_2$

- Tangential velocity of liquid layer in contact with outer cylinder will be equal to the tangential velocity of outer cylinder.

  $\therefore$ Velocity of liquid layer with outer cylinder $= \omega \times R_2$

  Velocity of liquid layer with inner cylinder $= 0$ $\quad (\because \text{Inner cylinder is stationary})$

  $\therefore$ Velocity gradient over the radial distance $(R_2 - R_1)$

$$= \frac{du}{dy} = \frac{\omega R_2 - 0}{R_2 - R_1} = \frac{\omega R_2}{R_2 - R_1}$$

$$\therefore \text{ Shear stress } (\tau) = \mu \frac{du}{dy}$$

$$= \mu \frac{\omega R_2}{R_2 - R_1}$$

$$\therefore \text{ Shear Force (F)} = \text{Shear stress} \times \text{Area of surface}$$

$$= \tau \times 2\pi R_1 H$$

$$= \mu \frac{\omega R_2}{R_2 - R_1} \times 2\pi R_1 H$$

- The torque T_1 on the inner cylinder due to cylinder due to shearing action of the liquid in the annular space is

$$T_1 = \text{Shear force} \times \text{Radius}$$
$$= \mu \frac{\omega R_2}{R_2 - R_1} \times 2\pi R_1 H \times R_1$$

- If the gap between the bottom of the two cylinders is 'h', then the torque applied on inner cylinder (T_2) is given by equation as

$$T_2 = \frac{\mu}{60t}\pi^2 N R^4$$

But here $R = R_1, t = h$

$$T_2 = \frac{\mu}{60h}\pi^2 N R_1^4$$

$$\therefore T_2 = \frac{\mu}{60h}\pi^2 \times \frac{60\omega}{2\pi} \times R_1^4 \qquad \left(\because \omega = \frac{2\pi N}{60} \Rightarrow N = \frac{60\omega}{2\pi}\right)$$

$$\therefore T_2 = \frac{\pi\mu\omega}{2h} R_1^4$$

$\therefore$ Total torque T acting on the inner cylinder is

$$T = T_1 + T_2$$
$$= \frac{2\pi\mu\omega H R_1^2 R_2}{R_2 - R_1} + \frac{\pi\mu\omega}{2h} R_1^4$$
$$= 2\pi\mu R_1^2 \left[\frac{R_2 H}{R_2 - R_1} + \frac{R_1^2}{4h}\right] \times \omega$$

$$\boxed{\therefore \mu = \frac{2(R_2 - R_1)hT}{\pi R_1^2 \omega \left[4HhR_2 + R_1^2(R_2 - R_1)\right]}}$$

Where T = torque measured by the strain of the torsional spring

R_1, R_2 = radii of inner and outer cylinder

h = clearance at the bottom of cylinders

H = height of liquid in annular space

μ = co-efficient of viscosity to be determined.

- Hence, the value of μ can be calculated from above equation.

4. Orifice Type Viscometer

- In this method, the time taken by a certain quantity of the liquid whose viscosity is to be determined , to flow through a short capillarity tube is noted down.
- The co-efficient of viscosity is then obtained by comparing with the co-efficient of viscosity of liquid whose viscosity is known or by the use of conversion factor.
- Fig. shows Saybolt viscometer, which consists of a tank at the bottom of which a short capillarity tube is fitted.
- This tank is surrounded by another tank , called constant temperature bath.

- The liquid is allowed to flow through the capillarity tube at a standard temperature.
- The time taken by 60 c.c. of the liquid to flow through the capillarity tube is noted down.
- The initial height of the liquid in the tank previously adjusted to standard height. Fro time measurement, the kinematic viscosity of liquid is known from the relation,

$$\upsilon = At - \frac{B}{t}$$

Where A = 0.24, B = 190, t = time noted in seconds, υ = kinematic viscosity in stokes

List of Formula

1. For the viscous flow through circular pipe,
   a. Shear stress..... $\tau = -\frac{\partial p}{\partial x}\frac{r}{2}$
   b. Velocity ..... $u = -\frac{1}{4\mu}\frac{\partial p}{\partial x}\left[R^2 - r^2\right]$
   c. Ratio of Maximum velocity and average velocity

   $$\frac{u_{max}}{\bar{u}} = 2$$

   d. Loss of pressure head $h_f = \frac{32\mu\bar{u}L}{\rho g D^2}$

   Where $\frac{\partial p}{\partial x}$ = Pressure gradient

   r = radius at any point — R = radius of the pipe

   u_{max} = Maximum velocity — $\bar{u}$ = Average velocity

   D = Diameter of pipe — μ = coefficient of viscosity
2. For the viscous flow between two parallel plates
   a. Shear stress..... $\tau = -\frac{1}{2}\frac{\partial p}{\partial x}\left[t - 2y\right]$
   b. Velocity ..... $u = -\frac{1}{2\mu}\frac{\partial p}{\partial x}\left[ty - y^2\right]$
   c. Ratio of Maximum velocity and average velocity

   $$\frac{U_{max}}{\bar{u}} = \frac{3}{2}$$

   d. Loss of pressure head $h_f = \frac{p_1 - p_2}{\rho g} = \frac{12\mu\bar{u}L}{\rho g t^2}$
3. For the viscous resistance of journal bearing
   a. Power $P = \frac{\mu\pi^3 D^3 N^2 L}{60 \times 60 \times t}$ watts
   b. Torque $T = \frac{\mu\pi^2 D^3 N L}{120t}$
   c. $\tau = \frac{\mu\pi d N}{60t}$
   d. Shear force $= \frac{\mu\pi^2 D^2 N L}{60t}$
   e. $V = \frac{\pi D N}{60}$

9

TURBULENT FLOW

Course Contents

9.1 Introduction

9.2 Shear Stress in Turbulent Flow

- 9.2.1 Reynolds Expression for Turbulent Shear Stress
- 9.2.2 Velocity Distribution in Turbulent Flow in Pipes
- 9.2.3 Prandtl Mixing Length for Turbulent Shear Stress

9.3 Velocity Distribution in Turbulent Flow in Pipes

- 9.3.1 Hydradynamically Smooth and Rough Boundaries
- 9.3.2 Velocity distribution for turbulent flow in smooth pipes
- 9.3.3 Velocity distribution for turbulent flow in rough pipes

9.1 Introduction

Laminar flow is possible only at low velocities and when the fluid is highly viscous. But when the velocity is increased or fluid is less viscous, the fluid particles do not move in straight paths. The fluid particles move in random manner resulting in general mixing of the particles. This type of flow is called turbulent flow.

9.2 Shear Stress in Turbulent Flow

The shear stress in viscous flow is given by,

$$\tau_v = \mu \frac{du}{dy} \text{ where } \tau_v = \text{shear stress due to viscosity}$$

J.Boussinesq expressed the turbulent shear stress is given by,

$$\tau_t = \eta \frac{d\bar{u}}{dy}$$

where τ_t = shear stress due to turbulence

$\eta =$ Eddy viscosity

$\bar{u} =$ Average velocity at a distance y from boundary

But kinematic eddy viscosity is given by,

$$\varepsilon = \frac{\eta}{\rho}$$

If the shear stress due to viscous flow is also consider then total shear stress becomes as,

$$\tau = \tau_v + \tau_t = \mu \frac{du}{dy} + \eta \frac{d\bar{u}}{dy}$$

9.2.1 Reynolds Expression for Turbulent Shear Stress

Reynolds expression for turbulent shear stress between two layers of a fluid at a small distance apart is given by,

$$\tau = \rho u' v' \quad \text{.....(9.1)}$$

where u', v' = fluctuating component of velocity in the direction of x and y due to turbulence.

As u', v' are varying and hence τ will also vary. Hence to find the shear stress, the time average on both the sides of the equation 9.1 is taken. Thus,

$$\tau = \overline{\rho u' v'} \quad \text{.....(9.2)}$$

Above equation is known as Reynolds stress.

9.2.2 Prandtl Mixing Length for Turbulent Shear Stress

According to Prandtl, the mixing length l, is the distance between two layers in the transverse direction such that the lumps of fluid particles from one layers could reach the other layer and the particles are mixed in the other layer in such a way that the momentum of the particles in the direction of x same.

Prandtl assumed that the velocity fluctuation in the x direction u' is related to the mixing length l as

$$u' = l\frac{du}{dy}$$

and v', the fluctuating component of velocity in y direction is of the same order of magnitude as u' and hence,

$$v' = l\frac{du}{dy}$$

Now $\overline{u' \times v'}$ becomes $\overline{u'v'} = \left(l\frac{du}{dy}\right) \times \left(l\frac{du}{dy}\right) = l^2\left(\frac{du}{dy}\right)^2$

Substitute the value of $\overline{u'v'}$ in equation (9.3); we get the expression for shear stress in turbulent flow due to Prandtl as

$$\bar{\tau} = \rho l^2\left(\frac{du}{dy}\right)^2 \quad \text{.....(9.3)}$$

Thus the total shear stress at any point in turbulent flow is the sum of shear stress due to viscous shear can be written as,

$$\bar{\tau} = \mu\frac{du}{dy} + \rho l^2\left(\frac{du}{dy}\right)^2 \quad \text{.....(9.4)}$$

9.3 Velocity Distribution in Turbulent Flow in Pipes

Pradlt assumed that the mixing length, l is a linear function of distance y from the pipe wall i.e $l = ky$, where k is constant, known as Karman Constant and =0.4

Substituting the value of l in equation (9.3) we get,

$$\bar{\tau} = \rho l^2\left(\frac{du}{dy}\right)^2$$

$$\tau = \rho \times (ky)^2 \times \left(\frac{du}{dy}\right)^2$$

$$\frac{du}{dy} = \sqrt{\frac{\tau}{\rho k^2 y^2}} = \frac{1}{ky}\sqrt{\frac{\tau}{\rho}}$$

for small values of y that is very close to the boundary of the pipe, Prandtl assumed that shear stress τ to be constant and approximately equal to τ_0 which presents the turbulent shear stress at the pipe boundary . Substituting the $\tau = \tau_0$

$$\frac{du}{dy} = \frac{1}{ky}\sqrt{\frac{\tau_0}{\rho}}$$

$\sqrt{\frac{\tau_0}{\rho}}$ has the dimension of shear velocity and is denoted by u_*. Thus $u_* = \sqrt{\frac{\tau_0}{\rho}}$, then the above equation becomes, $\frac{du}{dy} = \frac{1}{ky}u_*$.

Integrating above equation, we get,

$$u = \frac{u_*}{k}\ln y + C \quad \text{where } C = \text{constant of integration} \ldots\ldots\ldots\ldots\ldots\ldots(9.5)$$

To determine the C, the boundary conditions that y = R, $u = u_{max}$ is substitute in equation (9.5) hence,

$$u_{max} = \frac{u_*}{k}\ln R + C$$

$$C = u_{max} - \frac{u_*}{k}\ln R$$

Substitute the value of C in eqution (9.5) we get,

$$u = \frac{u_*}{k}\ln y + u_{max} - \frac{u_*}{k}\ln R$$

$$= u_{max} + \frac{u_*}{k}(\ln y - \ln R)$$

$$= u_{max} + \frac{u_*}{0.4}\ln\frac{y}{R}$$

$$u = u_{max} + 2.5u_*\ln\frac{y}{R}$$

Above equation is called Pradlt universal velocity distribution equation for turbulent flow in pipes. This equation is applicable to smooth as well as rough pipe boundaries.

$$u_{max} - u = -2.5u_*\ln\frac{y}{R} + 2.5\ln\frac{R}{y}$$

Divided by u_*, we get

$$\frac{u_{max} - u}{u_*} = 2.5\ln\frac{R}{y} = 2.5 \times 2.3\log_{10}\left(\frac{R}{y}\right)$$

Above equation is the difference between maximum velocity u_{max} and local velocity u at any point is known as velocity defect.

9.3.1 Hydradynamically Smooth and Rough Boundaries

Let k is the average height of the irregularities projecting from the surface of a boundary as shown in Fig. 9.1. If the value of k is large for a boundary then the boundary is called rough boundary and if less than, boundary is called smooth boundary layer.

In turbulent flow analysis along a boundary the flow is divided in two portions. The first portion consists of a thin layer of fluid in the immediate neighbourhood of the boundary, where viscous shear stress predominates while the shear stress due to turbulence is negligible. This portion is known as laminar sub-layer. The height upto which the effect of viscosity is predominates in this zone is denoted by δ'. The second portion of flow, where shear stress due to turbulence is large as compare to viscous stress is known as turbulent zone.

(a) Hydrodynamically smooth boundary:

If the average height k projecting from the surface of a boundary is much less that δ', is called smooth boundary. This is because the outside the laminar sub-layer the flow is

turbulent and eddies are unable to reach the surface of the boundary. But due to great thickness of laminar sub layer the eddies are unable to reach the surface irregularities and hence the boundary behaves as smooth boundary, is known as hydrodynamically smooth boundary.

(b) Hydrodynamically Rough Boundary

Now if the Reynolds number of the flow is increased then the thickness of laminar sub-layer will decreases. If the thickness of laminar sub-layer becomes much smaller than the average height k of irregularities of the surface as shown in Fig., the boundary will act a rough boundary. This is because irregularities of the surface are above the laminar sub-layer and the eddies present in turbulent zone will come in contact with the irregularities of the surface and lot of energy will be lost. Such a boundary is called hydrodynamically rough boundary.

From Nikuradse's experiment:

1. $\frac{k}{\delta'} < 0.25$, the boundary is called smooth bounadary
2. $\frac{k}{\delta'} > 6$, the boundary is rough
3. $0.25 < \frac{k}{\delta'} < 6$, the boundary is in transition

In terms of roughness Reynolds number $\frac{u_* k}{v}$,

1. If $\frac{u_* k}{v} < 4$, boundary is smooth
2. If $4 < \frac{u_* k}{v} < 100$, the boundary is in transition
3. If $\frac{u_* k}{v} > 100$, the boundary is rough

9.3.2 Velocity Distribution for Turbulent Flow in Smooth Pipes

The velocity distribution for turbent flow in smooth or rough pipe is given by,

$$u = \frac{u_*}{k} \ln y + C$$

at y = 0,the velocity u at wall is $-\infty$.This means that velocity is positive at some distance far away from the wall and $-\infty$ at the wall. Hence at some finite distance from wall, the velocity

will be zero. let this distance from pipe wall is y'. Now the boundary condition i.e at $y = y', u = 0$. Hence above equation becomes as,

$$0 = \frac{u_*}{k}\ln y' + C$$

$$C = -\frac{u_*}{k}\ln y'$$

Substitute the value of C in above equation, we get

$$u = \frac{u_*}{k}\ln y - \frac{u_*}{k}\ln y' = \frac{u_*}{k}\ln\frac{y}{y'}$$

Substitute the $k = 0.4$, we get

$$u = \frac{u_*}{0.4}\ln\frac{y}{y'}$$

$$\frac{u}{u_*} = 2.5 \times 2.3\log_{10}\frac{y}{y'} = 5.75\log_{10}\frac{y}{y'}$$

From Nikueadse's experiment y' is given as,

$$y' = \frac{\delta'}{107}$$

where $\delta' = \frac{11.6V}{u^*}$,

$$y' = \frac{11.6V}{u_*} \times \frac{1}{107} = \frac{0.108v}{u_*}$$

Substitute this value of y' in equation, we get

$$\frac{u}{u_*} = 5.75\log_{10}\frac{y}{\frac{0.108v}{u_*}}$$

$$= 5.75\log_{10}\left(\frac{u_* y}{v} \times 9.259\right)$$

$$= 5.75\log_{10}\frac{u_* y}{v} + 5.75\log_{10} 9.259$$

$$= 5.75\log_{10}\frac{u_* y}{v} + 5.55$$

9.3.3 Velocity Distribution for Turbulent Flow in Rough Pipes

In case of rough boundaries, the thickness of sub-layer is very small. The surface irregularities are above the laminar sub-layer and hence the laminar sub-layer is completely destroyed. Thus y' can be considered proportional to height of protrusions k. Nikuradse's experiment shows that $y' = \frac{k}{30}$ for pipe coated with uniform sand.

Substitute the value of y' in equation $\frac{u}{u_*} = 5.75\log_{10}\frac{y}{y'}$ we get,

$$\frac{u}{u_*} = 5.75\log_{10}\frac{y}{k/30} = 5.75\left[\log_{10}\left(\frac{y}{k}\right)\times 30\right]$$

$$= 5.75\log_{10}\left(\frac{y}{k}\right) + 8.5$$

5

FLOW THROUGH PIPES

Course Contents

5.1 Introduction
5.2 Friction Loss in Pipe Flow (Darcy Weisbach Formula for Major Loss)
5.3 Minor Losses
5.4 Hydraulic Gradient Lines and Total Energy Lines
5.5 Pipes in Series and Parallel
5.6 Equivalent Pipe
5.7 Siphon
5.8 Power Transmission through Pipes
5.9 Flow through Nozzle
5.10 Water Hammer in Pipes

5.1 Introduction

- A fluid is conveyed through close passage when it is required to maintain a certain pressure with respect to atmospheric pressure. Circular pipes, in most of the cases are widely used to carry fluids over a certain distances.
- A pipe is a close conduit through which fluid flows. The flow in the pipe is termed as pipe flow when the fluid completely fills the cross section of the pipe and there is no free surface of the fluid. Flow through a confined passage is said to be fully developed if the velocity profile does not alter along the flow. Fully developed flows can occur only in constant area symmetrical passage such as pipes, annuli, and between parallel plates.
- Fully developed flow may be laminar or turbulent depending upon the nature of the velocity profile corresponding to Reynolds number. Hydraulically, pipes flowing fluid with a free surface, are not having pipe flow. The pipe running partially full behaves like an open channel.
- Pipes most commonly used in engineering practice are of circular cross section. They are used to convey water distribution networks, oil transportation, gases for commercial and domestic requirements, air for pneumatic systems and also to transmit power when high pressure fluids are transmitted from one point to another. In hydropower plants large pipes called penstocks are used to transfer high-energy water from reservoir to turbine house.
- Since the fluid in a pipe is in motion, it has to overcome the frictional resistance between the adjacent fluid layers and that between the fluid layer and pipe walls. As fluid flows from one point to another, there is a loss of head due to friction. Thus there is a drop in energy gradient line. In a fully developed pipe flow, the pressure drops linearly along the length of the pipe. Therefore the pressure gradient along the flow remains constant.

5.2 Friction Loss in Pipe Flow (Darcy Weisbach Formula for Major Loss)

Darcy equation relates the head loss due to frictional or turbulent flow through a pipe to the velocity of the fluid, friction factor and diameter of the pipe.

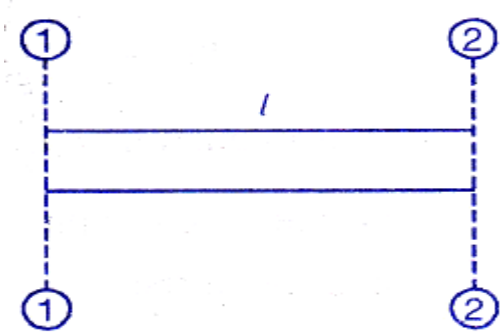

Fig.5.1 Uniform pipe

Consider a fluid flowing fully through a pipe of diameter d and the pipe of length l between sections 1-1 and 2-2 as shown in Fig 5.1.

Let V be the average velocity of fluid through the pipe.

Fraud estimated that,

Frictional resistance = $f^{'}$ x contact area x (velocity)^2 = $f^{'} \times (Pl) \times V^2$

Where P is the perimeter and $f^{'}$ is a coefficient depending on the roughness of the pipe.

As the liquid move in the pipe, there is a loss of energy doing work in overcoming the frictional resistance.

Loss of energy per second = work done in overcoming the frictional resistance per second,

$$= f^{'} \times (Pl) \times V^2 \times V$$

Weight of liquid discharged per second $= \rho g A V$, where A is area of a pipe.

Loss of energy head (h_f) = loss of energy per unit weight of the liquid

$$h_f = \frac{f^{'} \times (Pl) \times V^3}{\rho g A V}$$

For circular pipes, $P = \pi d, A = \frac{\pi}{4} d^2$ and $f^{'} = \frac{f \rho g}{2g}$ in above equation we get,

$$h_f = \frac{\left(\frac{f \rho g}{2g}\right) \times \pi d l \times V^3}{\rho g \times \frac{\pi}{4} d^2 \times V}$$

$$\boxed{h_f = \frac{4 f l V^2}{2 g d}} \qquad (5.1)$$

Above equation is known as *Darcy-Weisbach equation* for loss of head due to friction.

For non circular pipes, $h_f = \frac{f^{'} \times l \times V^2}{2gm}$ where m is the ratio of pipe area to pipe perimeter

Let $V = \frac{Q}{A}$ then, in terms of the discharge Q the equation is,

$$h_f = \frac{f \times l}{d} \times \frac{Q^2}{2g} \times \frac{16}{\pi^2 d^4}$$

$$\boxed{h_f = \frac{f l Q^2}{12 d^5}} \qquad (5.2)$$

For laminar flow, $f = \frac{64}{\mathrm{Re}}$ and for turbulent flow, $f = \frac{0.316}{\mathrm{Re}^{1/4}}$ for $4 \times 10^3 < \mathrm{Re} < 1 \times 10^5$

5.3 Minor Losses

Minor losses are secondary losses due to shock in a pipe flow. These losses may occur due to sudden change in the area of flow and the direction of flow. The minor loss of the head (energy) includes the following cases:

1. Loss of head due to sudden enlargement
2. Loss of head due to sudden contraction
3. Loss of head due to obstruction
4. Loss of head at the entrance of a pipe
5. Loss of head at the exit of a pipe
6. Loss of head due to bends
7. Loss of head in various pipe fittings

5.3.1 Loss of Head Due to Sudden Enlargement

Fig. 5.2 represents a pipe in which fluid experiences sudden enlargement. Here the head loss occurs due to the separation of the flow at the periphery of the smaller pipe, which leads to eddying motion in the corner region. The pressure drop from section 1 to 2 may be evaluated by taking fluid control volume 1-1-2-2, and applying continuity and momentum equations.

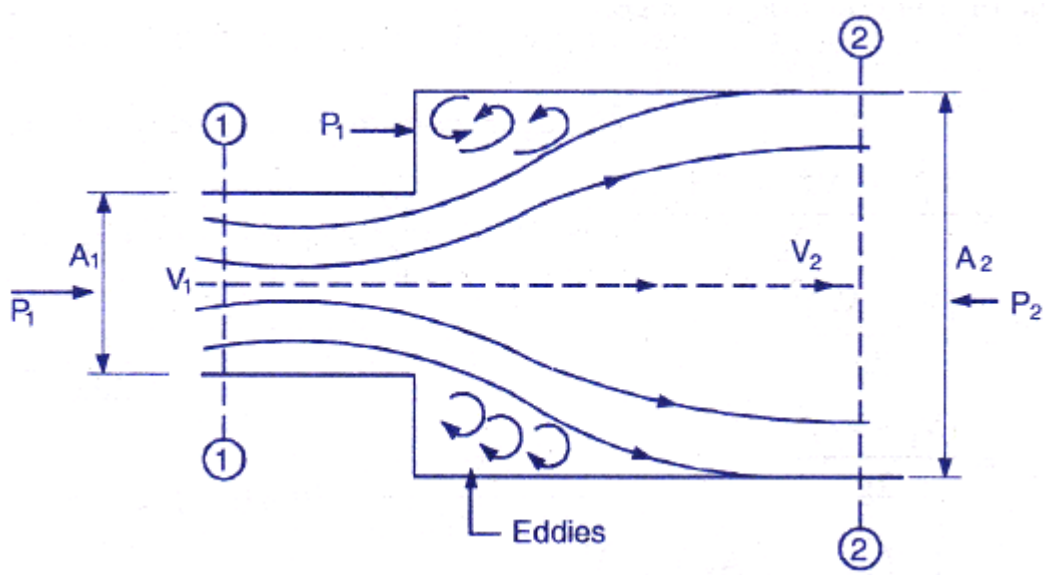

Fig. 5.2 Sudden enlargement in pipe

Let,

P_1 = Pressure intensity at section 1-1

P_2 = Pressure intensity at section 2-2

P_x = Intensity of pressure on the liquid eddies on the area A_2-A_1

V_1 = Velocity of fluid at section 1-1

V_2 = Velocity of fluid at section 2-2

A_1 = Area of cross section of pipe at section 1-1

A_2 = Area of cross section of pipe at section 2-2

h_{Le} = Head loss due to enlargement

Apply Bernoulli's equation at section 1-1 and 2-2,

$$\frac{P_1}{\rho g}+\frac{V_1^2}{2g}+z_1=\frac{P_2}{\rho g}+\frac{V_2^2}{2g}+z_2$$

Considering horizontal pipe, $z_1 = z_2$

$$h_{Le}=\frac{P_1-P_2}{\rho g}+\frac{V_1^2-V_2^2}{2g} \tag{5.3}$$

By continuity equation, $A_1V_1 = A_2V_2$

Also by momentum conservation,

$$P_1A_1+P_X\left(A_2-A_1\right)-P_2A_2=\rho Q\left(V_2-V_1\right)$$

Assuming that P_x the pressure in the stagnation area equals P_1, as there can be abrupt change of pressure across the same section,

$$\left(P_1-P_2\right)A_2=\rho A_2V_2\left(V_2-V_1\right)$$

$$\frac{P_1-P_2}{\rho g}=\frac{V_2^2-V_1V_2}{g} \tag{5.4}$$

Putting value of eq. 5.4 in eq. 5.3 we get,

$$h_{Le}=\frac{V_2^2-V_1V_2}{g}+\frac{V_1^2-V_2^2}{g}$$

$$=\frac{V_1^2+V_2^2-2V_1V_2}{2g}$$

$$\boxed{h_{Le}=\frac{\left(V_1-V_2\right)^2}{2g}} \tag{5.5}$$

$$=\frac{1}{2g}\left[V_1-\left(\frac{A_1}{A_2}\right)V_1\right]^2$$

$$=\frac{1}{2g}\left(1-\frac{A_1}{A_2}\right)^2V_1^2$$

$$\boxed{h_{Le} = K_1 \frac{V_1^2}{2g}} \tag{5.6}$$

5.3.2 Loss of Head Due to Sudden Contraction

Fig. 5.3 shows the sudden contraction. The stream lines are converging from section 1-1 to section C-C. The head loss occurs only after the vena contracta CC. This is because the flow up to this section is accelerating and the boundary layer separation does not occur. Let the area at section CC be A_C and velocity of fluid be V_C.

Using Bernoulli's equation, continuity and momentum equation at section 1-1 and 2-2, it can be proved that head loss due to sudden contraction is, (similar way as in sudden enlargement)

$$h_{Lc} = \left[1 - \frac{A_c}{A_2}\right]^2 \frac{V_C^{\,2}}{2g}$$

Where $\frac{A_c}{A_2}$ is called the coefficient of contraction (CC). The value of CC depends on the area ratio A_2/A_1, it may be taken as 0.62 on an average.

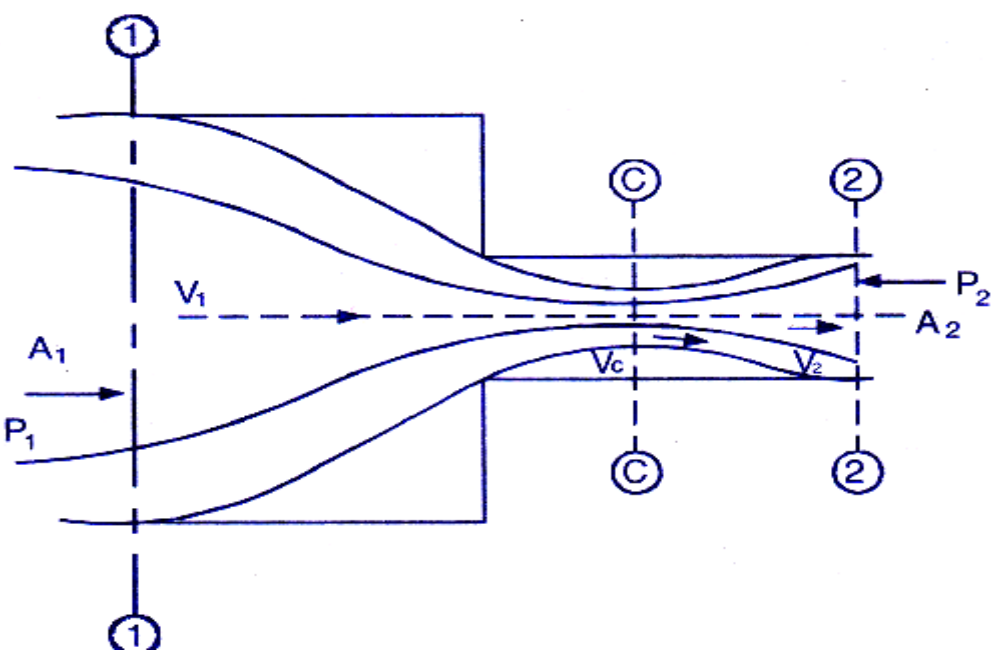

Fig. 5.3 Sudden contraction in pipe

$$h_{Lc} = (1 - 0.62)^2 \times \frac{V_C^{\,2}}{2g} \qquad \left(\because V_C = \frac{V_2}{0.62}\right)$$

$$h_{Lc} = (1 - 0.62)^2 \times \frac{V_C^{\,2}}{(0.62)^2 \times 2g}$$

$$h_{Lc} = 0.375 \times \frac{V_2^2}{2g}$$

$$h_{Lc} = K_2 \times \frac{V_2^2}{2g}$$

The constant K_2 depends upon the ratio A_2/A_1. In practice, unless otherwise mentioned, the value of K_2 will be taken as 0.5, thus the loss of head due to sudden contraction is found to be,

$$\boxed{h_{Lc} = 0.5 \times \frac{V_2^2}{2g}} \quad (5.7)$$

5.3.3 Loss of Head Due to Obstruction in a Pipe

The loss of head due to obstruction in a pipe takes place due to reduction in the cross sectional area of the pipe by the presence of obstruction which is followed by an abrupt enlargement of the stream lines beyond the obstruction. (Fig. 5.4)

Let,

V = Velocity of fluid in pipe

V_e = Velocity of fluid at obstruction

A_0 = Maximum area of obstruction

h_{L0} = head loss due to obstruction

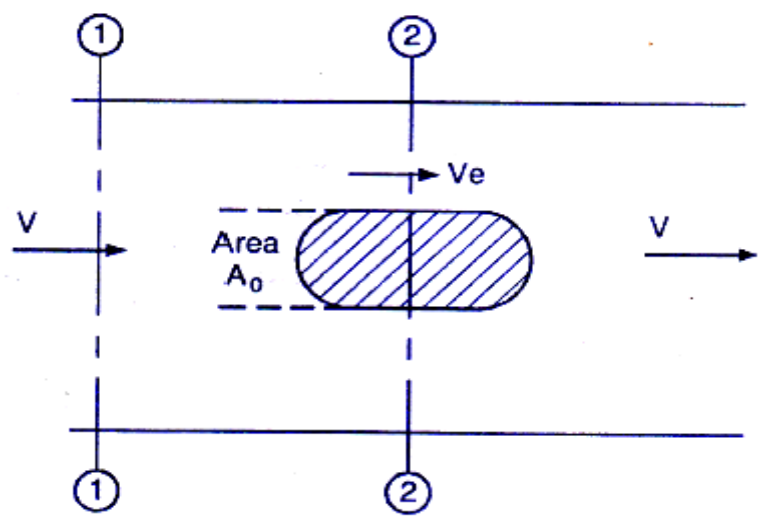

5.4 Loss of head due to obstruction in a pipe

Using Bernoulli's equation, continuity and momentum equation at section 1-1 and section 2-2, it can be proved that head loss due to obstruction is given by,

$$\boxed{h_{L0} = \left[\frac{A}{C_C\left(A - A_0\right)}\right]^2 \frac{V^2}{2g}} \tag{5.8}$$

5.3.4 Loss of Head at the Entrance of Pipe

The loss of head at the entrance of pipe is a similar case to loss of head due to sudden contraction as there is an abrupt reduction in area from an area of reservoir to area of a pipe. The loss of head is caused mainly by the turbulence created by the sudden enlargement of the jet after it has passed through the vena contracta.

The loss of head depends on the condition of the inlet, If the entrance to the pipe is well rounded with a bell-mouth, the loss of head is very small. In general, the loss of head in this case may be given as,

$$h_{Li} = K_3 \frac{V^2}{2g}$$

Where V is velocity of fluid in a pipe and K_3 varies from 0.48 to 0.56. Usually the average value 0.5 is taken.

$$\boxed{h_{Li} = 0.5 \frac{V^2}{2g}} \tag{5.9}$$

5.3.5 Loss of Head at the Exit of Pipe

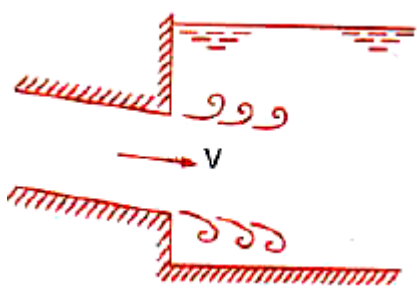

Fig. 5.5 Pipeline discharge into a large reservoir (Exit loss)

When the fluid from the pipe enters into a relatively larger reservoir the entire velocity is dissipated. If V is the velocity of fluid in a pipe, the head loss at exit is given by, (Fig. 5.5)

$$\boxed{h_{Le} = \frac{V^2}{2g}} \tag{5.10}$$

5.3.6 Loss of Head due to Bend in a Pipe

The loss of head in bends provided in pipes may be expressed as,

$$\boxed{h_{Lb} = K_4 \frac{V^2}{2g}} \tag{5.11}$$

V is the mean velocity of flow of liquid and K_4 = coefficient of bend and is depends on the ratio of radius of the curvature (R') to the diameter of pipe (D). The value of K_4 ranges from 0.19 to 0.42, larger values for lower R'/D, for a circular right angled bend the value of K_4 varies from 0.1 to 1.2 but an average value of 0.5 is usually taken.

5.3.7 Loss of Head in Various Pipe Fittings

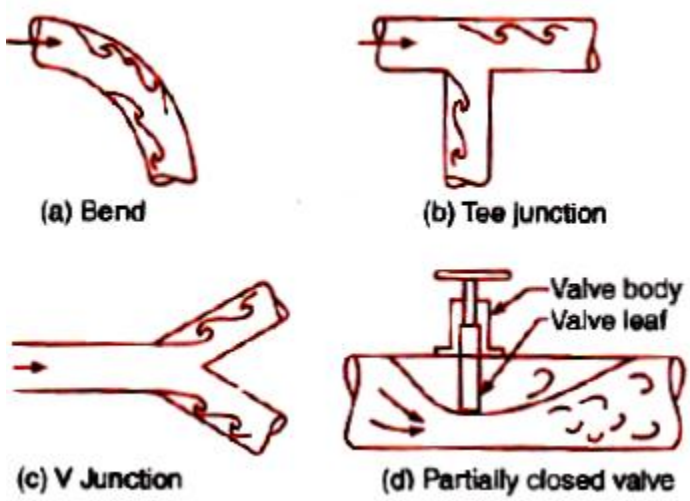

Fig. 5.6 Various pipe fittings

Pipe fittings (Fig. 5.6) in a piping system cause obstruction to flow and the loss of head occurs. The loss of head may be expressed as,

$$\boxed{h_L = K_5 \frac{V^2}{2g}} \tag{5.12}$$

The coefficient K_5 depends on the size, shape and type of fittings and V is the mean velocity of fluid in a pipe.

5.4 Hydraulic Gradient Lines and Total Energy Lines

5.4.1 Total Energy Line (T.E.L or E.G.L)

- Any fluid flowing through a piping system is subjected to a frictional resistance depending upon the velocity of the fluid, wetted surface area and on the roughness of the pipe surface. For long pipes, frictional resistance is so large that other resistances may be neglected. The energy loss per unit weight of the fluid is the energy or head loss in friction and is expressed in meters of the fluid.
- The energy diagram (Fig. 5.7) of a pipe system is a longitudinal display of summation of the pressure head, kinetic head and datum heads $\left(\frac{p}{\rho g} + \frac{V^2}{2g} + Z\right)$ at all the sections of the pipe.

The energy line, therefore, represents the loss of energy along the flow due to friction, minor losses, etc. It also includes any additional energy input by hydraulic machines like pumps and turbines in the flow system.

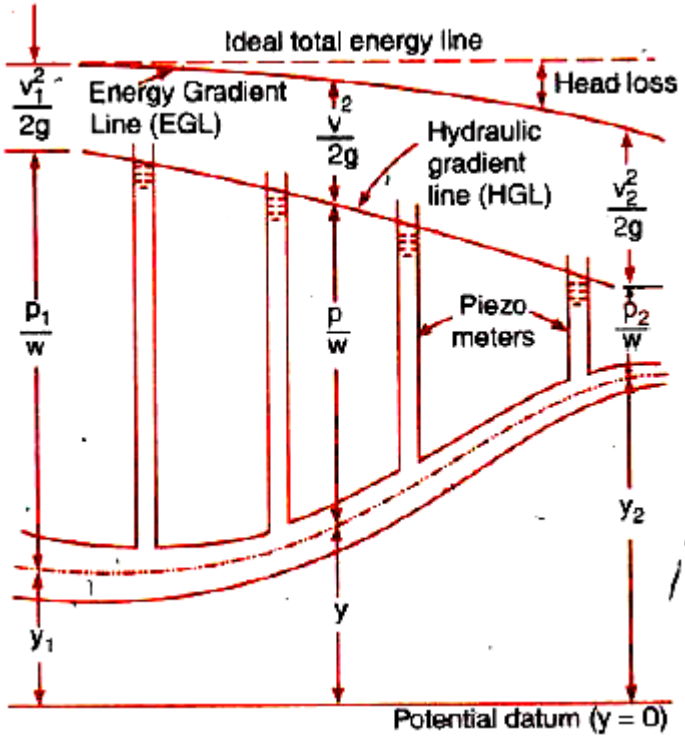

Fig. 5.7 Hydraulic gradient line and total energy line

5.4.2 Hydraulic Gradient Line (H.G.L)

The sum of potential head and pressure $\left(\frac{p}{\rho g}+Z\right)$ given section in the flow system is termed as piezometric head. Hydraulic gradient line is the line joining the piezometric levels at all the section and is the display of the pressure and datum heads at all the sections of a pipe line. It is therefore, lies below the total energy line by a magnitude equal to the local velocity head.

Characteristics of H.G.L and T.E.L

- The energy gradient line always drops in the direction of flow due to loss in head while hydraulic gradient lines may rise or fall depending on the pressure changes.
- For a pipe of uniform cross section the slope of the hydraulic gradient line is equal to the slope of energy gradient line. However, there is no relation between the slope of energy gradient line and slope of the axis of the pipe. (Fig. 5.8)

- In the absence of hydraulic machines like pumps, turbines or fans, the energy gradient line will continue to drop along the flow whereas the hydraulic gradient line, though always below the energy gradient line, may show an upward or downward trend.

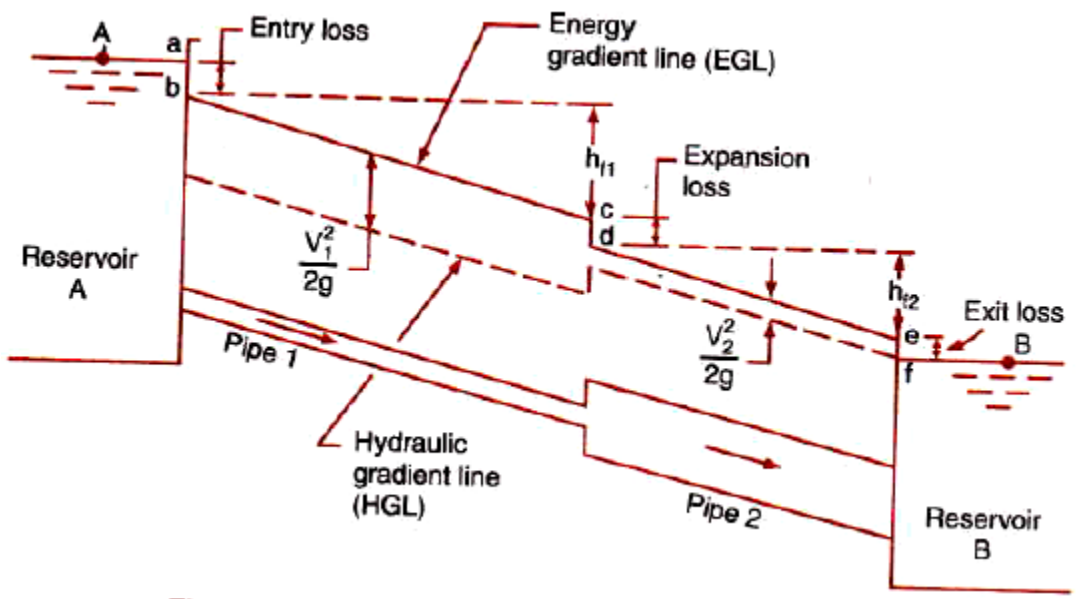

Fig. 5.8 Reservoirs connected by a piping system

- The energy lines are straight sloping lines irrespective of the pipeline being straight or curved since the slopes of these lines are referred to per unit length of the pipe and not unit length in any specific direction.

5.5 Pipes in Series and Parallel

If piping system is formed by joining pipes of different diameter and lengths in continuation as shown in Fig. 5.9, these are said to be pipes in series.

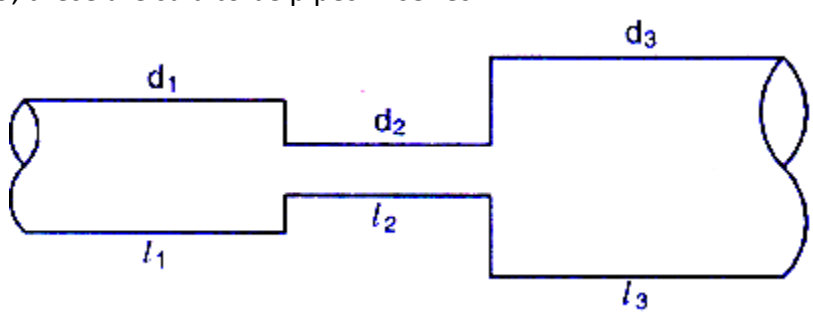

Fig. 5.9 Pipes in Series

In this case,

$$Q = Q_1 = Q_2 = Q_3$$

and the total head loss between two ends of the pipe is given by,

$$h_f = h_{f1} + h_{f2} + h_{f3}$$

If two or more pipes are joined to form a single pipe, there are said to be in parallels. In Fig. 5.10 pipes 1 and 2 are in parallels between points A and B. In this case, by continuity equation,

$$Q = Q_1 + Q_2 + Q_3$$

and neglecting minor losses, total head loss in this system is given as,

$$h_f = h_{f1} = h_{f2} = h_{f3}$$

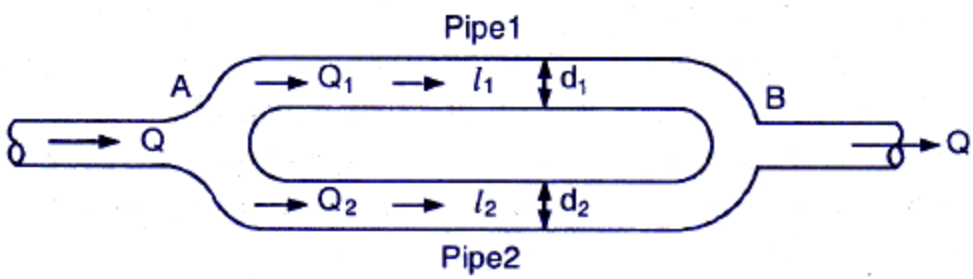

Fig. 5.10 Pipes in parallel

Hence, for pipes in series discharge is same through all the pipes where as head loss is shared among the pipes and for pipes in parallels, the discharge is shared by the pipes and head loss through each of them between the two common points is equal.

5.6 Equivalent Pipes

"For a pipe system consisting of several pipes of different diameters and lengths, it would be convenient to represent it by a pipe of certain length of uniform diameter which would have the same frictional loss and discharge. This pipe is called an equivalent pipe."

Let us take a case of three pipes connected in series. The system can be replaced by a pipe of length L_e and, uniform diameter D_e as follows:

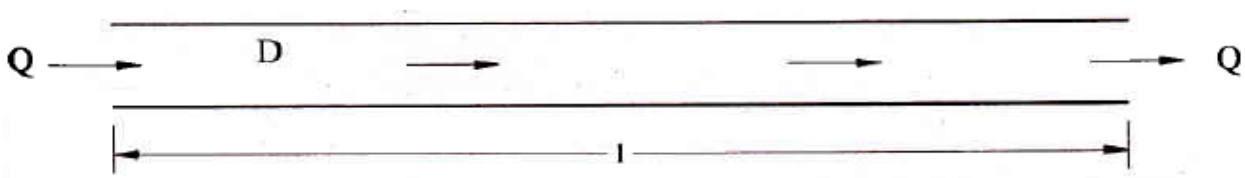

Fig. 5.12 Equivalent pipe

Let l_1, l_2 and l_3 be the lengths and d_1, d_2 and d_3 be the diameters and V_1, V_2 and V_3 be the corresponding velocities in these three pipes. Equating the loss in the pipe to that in the pipe system then,

$$\frac{4fL_eV^2}{2gD_e} = \frac{4f_1l_1V_1^2}{2gd_1} + \frac{4f_2l_2V_2^2}{2gd_2} + \frac{4f_3l_3V_3^2}{2gd_3}$$

From continuity equation,

$$A_1V_1 = A_2V_2 = A_3V_3 = AV = Q$$

$$d_1^2V_1 = d_2^2V_2 = d_3^2V_3 = D_e^2V = \frac{4Q}{\pi}$$

From above equation find the value of V_1, V_2, V_3, V and put in above loss of head equation then,

$$\frac{16\,fL_eQ^2}{D_e\pi^2D_e^4} = \frac{16\,f_1l_1V_1^2}{d_1\pi^2d_1^4} + \frac{16\,f_2l_2V_2^2}{d_2\pi^2d_2^4} + \frac{16\,f_3l_3V_3^2}{d_3\pi^2d_3^4}$$

$$\boxed{L_e = D_e^5\left(\frac{l_1}{d_1^5} + \frac{l_2}{d_2^5} + \frac{l_3}{d_3^5}\right)} \qquad (5.13)$$

Above equation gives the equivalent length of the pipe of D_e diameter. It is known as Dupuit'e equation. Similarly expression may also be developed for the pipes in parallels.

5.7 Siphon

"In a piping system any part of the pipe is above the hydraulic gradient line it is called a siphon." In Fig 5.13 shows a pipe in which the part BCD is above the hydraulic gradient line. The pressure head at any point along the axis of the pipe is equal to the distance between the HGL and the axis.

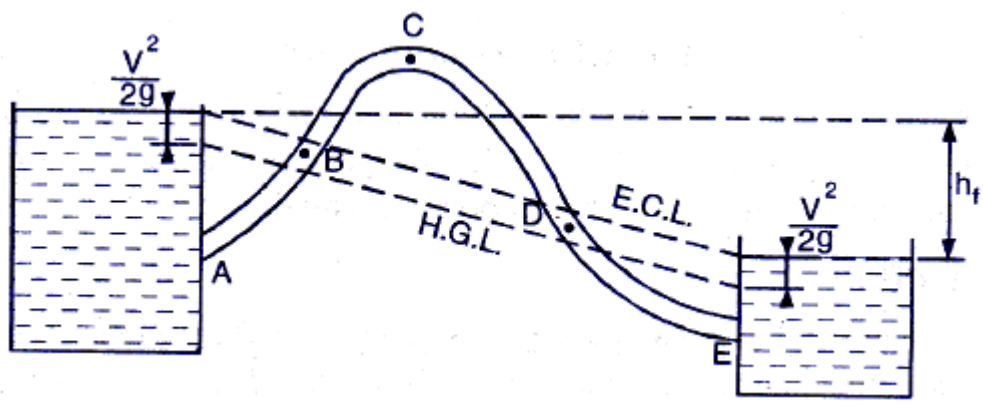

Fig. 5.13 Siphon

It shows that pressure head at points B and D is zero. The pressure head in the region BCD where pipe is above H.G.L. is negative. The minimum pressure would be at point C (summit point). If the absolute pressure at point C reaches vapour pressure, gases, vapour bubbles are liberated and cavitation occurs. For water, the maximum height of summit above H.G.L. at normal temperature and pressure is 7.8 m.

The discharge through a siphon may be calculated as,

$$H = h_L + h_f + \frac{V^2}{2g}$$

The siphon will start functioning only when it is primed, air is removed from it.

Uses of siphon

1. To carry away water from one reservoir to another reservoir separated by a hill or ridge.
2. To take out the liquid from a tank which is not having any outlet.
3. To empty a channel not provided with any outlet sluice.

5.8 Power Transmission through Pipes

Power is transmitted through pipes by flowing water or other liquids power flowing through then transmitted depends upon (i) the weight of liquid flowing through the pipe and (ii) the total available at the end of the pipe.

Consider a pipe AB connected to a tank conveying discharge Q from point A to B as shown in Fig. 5.14.

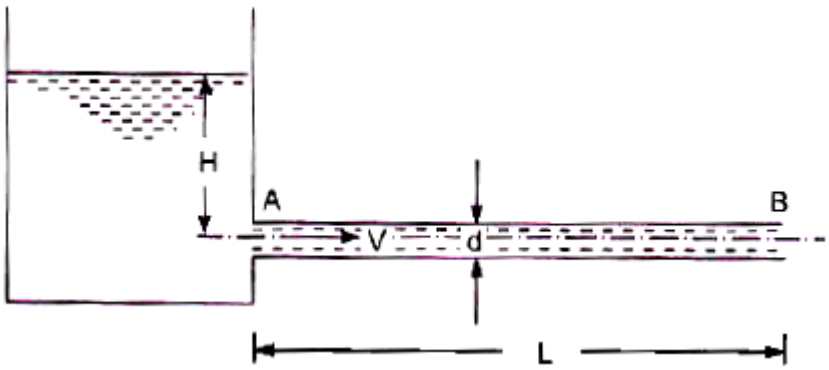

5.14 Power transmission through pipes

Let, L = length of the pipe,

d = diameter of the pipe,

H = total head available at the inlet of pipe,

V = velocity of flow in pipe,

h_f = loss of head due to friction

f = co-efficient of friction

The head available at the outlet of the pipe, if minor losses are neglected,

= Total head at inlet - loss of head due to friction

$= H - h_f$

$$= H - \frac{4flV^2}{2gd}$$

Weight of water flowing through pipe per sec,

$$W = \rho g \times \text{volume of water per sec} = \rho g \times \text{Area} \times \text{Velocity}$$

$$W = \rho g \times \frac{\pi}{4} d^2 \times V$$

The power transmitted at the outlet of the pipe

$$P = \text{weight of water per sec} \times \text{head at outlet}$$

$$\boxed{P = \left(\frac{\rho g}{1000} \times \frac{\pi}{4} d^2 \times V\right) \times \left(H - \frac{4flV^2}{2gd}\right)} \text{ kW} \tag{5.14}$$

Efficiency of power transmitted through the pipe:

$$\eta = \frac{\text{Power available at the outlet of the pipe}}{\text{Power supplied at the inlet of the pipe}}$$

$$= \frac{\text{Weight of the water per sec} \times \text{Head available at outlet}}{\text{Weight of the water per sec} \times \text{Head available at inlet}}$$

$$= \frac{W \times \left(H - h_f\right)}{W \times H}$$

$$\boxed{\eta = \frac{H - h_f}{H}} \tag{5.15}$$

Condition of power transmission:

The condition of maximum power transmission is obtained by differentiating power transmission equation 5.14 with respect to V and equation the same to zero. Thus,

$$\frac{d}{dV}(P) = 0$$

$$\frac{d}{dV}\left[\frac{\rho g}{1000} \times \frac{\pi}{4} d^2 \left(HV - \frac{4flV^3}{2gd}\right)\right] = 0$$

$$\frac{\rho g}{1000} \times \frac{\pi}{4} d^2 \left(H - \frac{4 \times 3 \times flV^2}{2gd}\right) = 0$$

$$H - 3 \times \frac{4flV^3}{2gd} = 0$$

$$H - 3 \times h_f = 0$$

$$\boxed{h_f = \frac{H}{3}} \tag{5.16}$$

Above equation shows that the head lost in friction should be one-third-of head available at entry for maximum power transmission.

The maximum efficiency is,

$$\eta_{\max} = \frac{H - h_f}{H} = \frac{H - H/3}{H} = 66.7\% \tag{5.17}$$

5.9 Flow through Nozzle

Fig. 5.15 shows a nozzle fitted at the end of a long pipe. The total energy at the end of the pipe of pressure energy and kinetic energy. By fitting the nozzle at the end of the pipe, the total is converted into kinetic energy. Thus nozzles are used, where higher velocities or flow are:

1. In case of Pelton turbine, the nozzle is fitted at the end of the pipe (called penstock) to increase the velocity.
2. In case of the extinguishing fire, a nozzle is fitted at the end of the hose pipe to increase the velocity

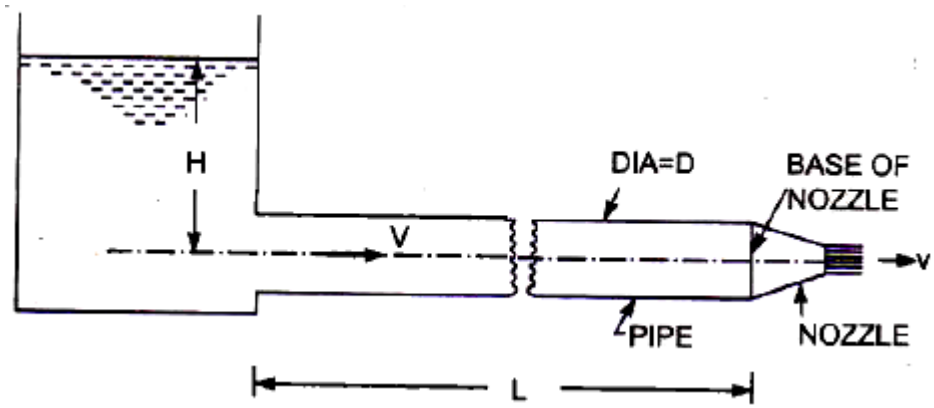

5.15 Power transmission through nozzle

Let,

$D =$ diameter of the pipe and $L =$ length of the pipe

$A =$ area of the pipe

$V =$ velocity of flow in pipe,

$H =$ total head at the inlet of the pipe

$d =$ diameter of nozzle at outlet

$v =$ velocity of flow at outlet of nozzle

$a =$ area of the nozzle at outlet

$f =$ co-efficient of friction for pipe

Loss of head due to friction in pipe

$$h_f = \frac{4fLV^2}{2gD}$$

The head available at the end of the pipe or at the base of nozzle

$$= \text{Total head at inlet at the inlet of pipe - loss of head due to friction}$$

$$= H - h_f$$

$$= H - \frac{4fLV^2}{2gd}$$

Neglecting minor losses and also assuming losses in the nozzle negligible, we have
Total head at inlet of pipe = total head (energy) at the outlet of nozzle or kinetic head + losses

$$H = \frac{v^2}{2g} + h_f = \frac{v^2}{2g} + \frac{4fLV^2}{2gD} \tag{5.18}$$

From continuity equation in the pipe and outlet of nozzle,

$$AV = av \text{ thus } V = \frac{av}{A}$$

Substitute the value of V in above equation 5.18 we get,

$$H = \frac{v^2}{2g} + h_f = \frac{v^2}{2g} + \frac{4fL}{2gD} \times \left(\frac{av}{A}\right)^2 = \frac{v^2}{2g} + \frac{4fLa^2v^2}{2g \times D \times A^2} = \frac{v^2}{2g}\left(1 + \frac{4fLa^2}{DA^2}\right)$$

$$\boxed{v = \sqrt{\frac{2gH}{\left(1 + \frac{4fL}{D} \times \frac{a^2}{A^2}\right)}}} \tag{5.19}$$

At the outlet of nozzle, kinetic energy $= \frac{1}{2}mv^2$

Now mass of liquid at the outlet of nozzle per second, $m = \rho av$

The kinetic energy of the jet at the outlet per second $= \frac{1}{2}\rho av \times v^2 = \frac{1}{2}\rho av^3$

Power in kW at the outlet of the nozzle $= \left(K.E/_{sec}\right) \times \frac{1}{1000} = \frac{\frac{1}{2}\rho av^3}{1000}$

Efficiency of power transmission through nozzle:

The efficiency of power transmission through nozzle is,

$$\eta = \frac{\text{Power at outlet of nozzle}}{\text{Power at inlet of pipe}} = \frac{\frac{\frac{1}{2}\rho av^3}{1000}}{\frac{\rho gQH}{1000}}$$

$$= \frac{\frac{\frac{1}{2}\rho av.v^2}{1000}}{\frac{\rho g(av)H}{1000}}$$

$$\boxed{\eta = \frac{v^2}{2gH} = \left[\frac{1}{1+\frac{4fL}{D}\times\frac{a^2}{v^2}}\right]} \text{(from eq 5.19)} \qquad (5.20)$$

Condition for maximum power transmitted through nozzle:

Total head at the inlet of the pipe = total head at the outlet of the nozzle + losses

$$H = \frac{v^2}{2g} + h_f = \frac{v^2}{2g} + \frac{4fLV^2}{2gD}$$

But the power transmitted through nozzle

$$P = \frac{\frac{1}{2}\rho a v^3}{1000} = \frac{\frac{1}{2}\rho a v}{1000}\times v^2 = \frac{\frac{1}{2}\rho a v}{1000}\left[2g\left(H - \frac{4fLV^2}{2gD}\right)\right]$$

$$= \frac{\rho g a v}{1000}\left[H - \frac{4fLV^2}{2gD}\right]$$

Now from continuity equation, $AV = av$, $V = \frac{av}{A}$

Substituting the value of V in equation we get,

The power transmitted through nozzle $= \frac{\rho g a v}{1000}\left[H - \frac{4fLa^2V^2}{2gD}\times\frac{v^2}{A^2}\right]$

The power will be maximum, when $\frac{d(P)}{dv} = 0$

$$\frac{d}{dv}\left[\frac{\rho g a v}{1000}\left(H - \frac{4fL}{2gD}\times\frac{a^2v^2}{A^2}\right)\right] = 0$$

$$\frac{d}{dv}\left[\frac{\rho g a}{1000}\left(Hv - \frac{4fL}{2gD}\times\frac{a^2v^3}{A^2}\right)\right] = 0$$

$$\left[\frac{\rho g a}{1000}\left(H - 3\frac{4fL}{2gD}\times\frac{a^2v^2}{A^2}\right)\right] = 0$$

$$H - 3\frac{4fLV^2}{2gD} = 0 \quad \left(\because V = \frac{av}{A}\right)$$

$$H - 3h_f = 0$$

$$\boxed{h_f = \frac{H}{3}} \qquad (5.21)$$

Above equation shows that the power transmitted through the nozzle is maximum when the head lost in friction should be one-third-of head available at the inlet of pipe.

Diameter of nozzle for maximum power transmission through nozzle:

Head lost due to friction is given by,

$$h_f = \frac{4fLV^2}{2gD} \quad \left(\because h_f = \frac{H}{3}\right)$$

$$\frac{H}{3} = \frac{4fLV^2}{2gD}$$

$$H = 3 \times \frac{4fLV^2}{2gD} \tag{5.22}$$

But $H =$ total head at outlet + losses

$$H = \frac{v^2}{2g} + h_f = \frac{v^2}{2g} + \frac{4fLV^2}{2gD} \tag{5.23}$$

Equating above two value of H from eq. 5.22 and 5.23 we get,

$$3 \times \frac{4fLV^2}{2gD} = \frac{v^2}{2g} + \frac{4fLV^2}{2gD} \text{ or } \frac{12fLV^2}{2gD} - \frac{4fLV^2}{2gD} = \frac{v^2}{2g}$$

$$\frac{8fLV^2}{2gD} = \frac{v^2}{2g} \tag{5.24}$$

Now from continuity equation, $AV = av$ or $V = \frac{av}{A}$

Substituting the value of V in equation 5.24 we get,

$$\frac{8fL}{2gD} \times \frac{a^2v^2}{A^2} = \frac{v^2}{2g}$$

Divided by $\frac{v^2}{2g}$ we get,

$$\frac{8fL}{D} \times \frac{a^2}{A^2} = 1$$

$$\frac{8fL}{D} \times \frac{\left(\frac{\pi}{4}d^2\right)^2}{\left(\frac{\pi}{4}D^2\right)^2} = 1 \text{ or } \frac{8fL}{D} \times \frac{d^4}{D^4}$$

$$d^4 = \frac{D^5}{8fL}$$

$$\boxed{d = \left(\frac{D^5}{8fL}\right)^{1/4}} \tag{5.25}$$

Diameter of nozzle for maximum power transmission can be obtained from above equation.

5.10 Water Hammer in Pipes

Consider a long pipe AB as shown in Fig. 5.16 connected at one end to a tank containing water at a height of H from the centre of the pipe. At the other end of the pipe, a valve to regulate the flow of water is provided. When the valve is completely open, the water is flowing with a velocity, V in the pipe.

If the valve is suddenly closed, the momentum of the flowing water will be destroyed and consequently a wave of high pressure will be set up. This wave of high pressure will be transmitted along the pipe with a velocity equal to the velocity of sound wave and may create noise called knocking. Also this wave of high pressure has the effect of hammering action on the walls of the pipe and hence it is known as *water hammer.*

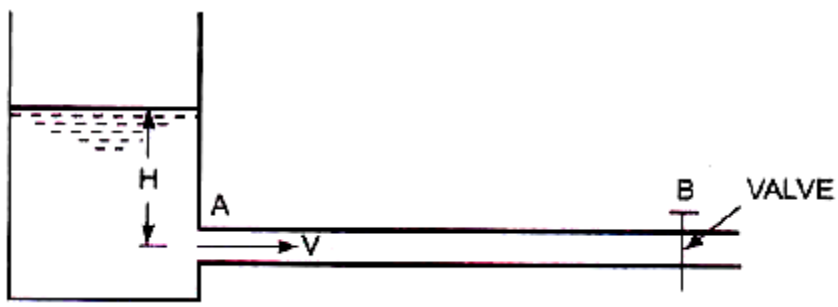

Fig. 5.16 Water hammer effect

The pressure rise due to water hammer depends upon: (i) the velocity of flow of water in pipe, (ii) length of pipe, (iii) time taken to close the valve, (iv) elastic properties of the material of the pipe. The following cases of water hammer in pipes will be considered:

1. Gradual closure of valve,
2. Sudden closure of valve and considering pipe rigid, and
3. Sudden closure of valve and considering pipe elastic.

<u>Case- 1 Gradual Closure of Valve</u>

Let the water is flowing through the pipe AB shown in Fig. 5.12, and the valve provided at the end of the pipe is closed gradually.

Let ,

A = area of cross-section of the pipe AB:

L = length of pipe

V = velocity of flow through the pipe

T = time in seconds required to close the valve

p = intensity of pressure wave produce

Mass of water in pipe AB = $\rho \times$ volume of water = $\rho \times A \times L$

The valve is closed gradually in time T seconds and hence the water is brought from velocity V to zero velocity in time T seconds.

$$\text{Retardation of water} = \frac{\text{Change of velocity}}{\text{Time}} = \frac{V-0}{T} = \frac{V}{T}$$

$$\text{Retarding force} = \text{Mass} \times \text{Retardation} = \rho AL \times \frac{V}{T}$$

If p is the intensity of pressure wave produced due to closure of the valve, the force pressure wave,

$$= p \times \text{area of pipe} = p \times A$$

Equating the two forces, given by equations,

$$\rho AL \times \frac{V}{T} = p \times A$$

$$p = \frac{\rho LV}{T} \qquad (5.26)$$

Head of pressure, $H = \frac{p}{\rho g} = \frac{\rho LV}{\rho gT} = \frac{LV}{gT}$

(i) The valve closure is said to be gradual if $T > \frac{2L}{C}$ where T = time in sec, C = velocity of pressure wave

(ii) The valve closure is said to be sudden if $T < \frac{2L}{C}$ where C = velocity of pressure wave.

<u>Case-2 Sudden Closure of Valve and Pipe is Rigid</u>

Equation 5.26 gives the relation between increase of pressure due to water hammer in pipe and the time required to close the valve. If t = 0, the increase in pressure will be infinite. But from experiments, it is observed that the pressure due to water hammer is finite, even for a very rapid closure of valve. Thus equation 5.26 valid only for (i) incompressible fluids and (ii) when pipe is rigid. But when a wave of high pressure is created, the liquids get compressed to some extent and also pipe material gets stretched. For sudden closure of valve [the valve of t is small and hence a wave of high pressure is created]

The following two cases will be considered:

(i) Sudden closure of valve and pipe is rigid, and (ii) Sudden closure of valve and pipe is elastic.

Consider a pipe AB in which water is flowing as shown in Fig. 5.16.Let the pipe is rigid and valve fitted at the end B is closed suddenly.

Let,

A = Area of cross-section of pipe AB

L = Length of pipe

V = Velocity of flow of water through pipe

p = Intensity of pressure wave produced

K = Bulk modulus of water

C = Velocity of pressure wave

When the valve is closed suddenly, the kinetic energy of the flowing water is converted into strain of water if the effect of friction is neglected and pipe wall is assumed perfectly rigid.

$$\text{Loss of kinetic energy} = \frac{1}{2} \times \text{ mass of water in pipe} \times V^2$$

$$= \frac{1}{2} \times \rho AL \times V^2 \qquad (\because \text{ mass} = \rho \times \text{ volume} = \rho \times AL)$$

$$\text{Gain of strain energy} = \frac{1}{2}\left(\frac{p^2}{K}\right) \times \text{ volume} = \frac{1}{2}\left(\frac{p^2}{K}\right) \times AL$$

Equating the loss of kinetic energy to gain of strain energy

$$\frac{1}{2} \times \rho AL \times V^2 = \frac{1}{2}\left(\frac{p^2}{K}\right) \times AL$$

$$p^2 = \frac{1}{2} \times \rho AL \times V^2 \times \frac{2K}{AL} = \rho K V^2$$

$$p = \sqrt{\rho K V^2} = V\sqrt{\rho K} = V\sqrt{\frac{K\rho^2}{\rho}}$$

$$\boxed{p = \rho V C} \qquad \left(\because \sqrt{\frac{K}{\rho}} = C\right)$$

Case-3 Sudden Closure of Valve and Pipe is Elastic

Consider the pipe AB in which water is flowing as shown in Fig. 5.16. Let the thickness ‘t‘ of the pipe wall is small compared to the diameter D of the pipe and also let the pipe is elastic.

Let,

E = Modulus of Elasticity of the pipe material

$\frac{1}{m}$ = Poisson's ratio for pipe material

p = Increase of pressure due to water hammer

t = Thickness of the pipe wall

D = Diameter of the pipe

When the valve is closed suddenly, a wave of high pressure of intensity p to this high pressure p, circumferential and longitudinal stresses in the pipe wall will be produced.

Let,

f_l = Longitudinal stress in pipe

f_c = Circumferential stress in pipe

The magnitude of these stresses are given as, $f_l = \frac{pD}{4t}$ and $f_c = \frac{pD}{2t}$

Now from the knowledge of strength of material we know, strain energy stored in pipe material per unit volume,

$$= \frac{1}{2E}\left[f_l^{\,2} + f_c^{\,2} - \frac{2 f_l \times f_c}{m} \right]$$

$$= \frac{1}{2E}\left[\left(\frac{pD}{4t}\right)^2 + \left(\frac{pD}{2t}\right)^2 - \frac{2 \times \frac{pD}{4t} \times \frac{pD}{2t}}{m} \right]$$

$$= \frac{1}{2E}\left[\frac{p^2D^2}{16t^2} + \frac{p^2D^2}{t^2} - \frac{p^2D^2}{4mt^2} \right]$$

Taking Poisson ratio $\frac{1}{m} = \frac{1}{4}$,

Strain energy stored in pipe material per unit volume,

$$= \frac{1}{2E}\left[\frac{p^2D^2}{16t^2} + \frac{p^2D^2}{t^2} - \frac{p^2D^2}{4t^2 \times 4} \right] = \frac{1}{2E} \times \frac{p^2D^2}{4t^2} = \frac{p^2D^2}{8Et^2}$$

Total volume of pipe material $= \pi D \times t \times L$

Total strain energy stored in pipe material

$$= \text{ Strain energy per unit volume } \times \text{ total volume}$$

$$= \frac{p^2D^2}{8Et^2} \times \pi D \times t \times L = \frac{p^2 \pi D^3 L}{8Et}$$

$$= \frac{p^2 \times \pi D^2 \times DL}{8Et} = \frac{p^2 A \times DL}{2Et} \qquad \left(\because \frac{\pi}{4} D^2 = A \right)$$

Now loss of kinetic energy of water $= \frac{1}{2} \times mV^2 = \frac{1}{2} \times \rho AL \times V^2$

Gain of strain energy in water $= \frac{1}{2}\left(\frac{p^2}{K}\right) \times$ volume $= \frac{1}{2}\left(\frac{p^2}{K}\right) \times AL$

Then, loss of kinetic energy to gain of strain energy = Gain of strain energy in water + strain energy stored in pipe material.

$$\frac{1}{2} \times \rho AL \times V^2 = \frac{1}{2}\left(\frac{p^2}{K}\right) \times AL + \frac{p^2 A \times DL}{2Et}$$

Divided by AL,

$$\frac{\rho V^2}{2} = \frac{1}{2}\left(\frac{p^2}{K}\right) + \frac{p^2 D}{2Et} = \frac{p^2}{K}\left[\frac{1}{K} + \frac{D}{Et}\right]$$

$$\rho V^2 = p^2\left[\frac{1}{K} + \frac{D}{Et}\right]$$

$$p^2 = \frac{\rho V^2}{\frac{1}{K} + \frac{D}{Et}}$$

$$p = \sqrt{\frac{\rho V^2}{\frac{1}{K} + \frac{D}{Et}}}$$

$$\boxed{p = V \times \sqrt{\frac{\rho}{\frac{1}{K} + \frac{D}{Et}}}} \qquad (5.27)$$

11

COMPRESSIBLE FLOW

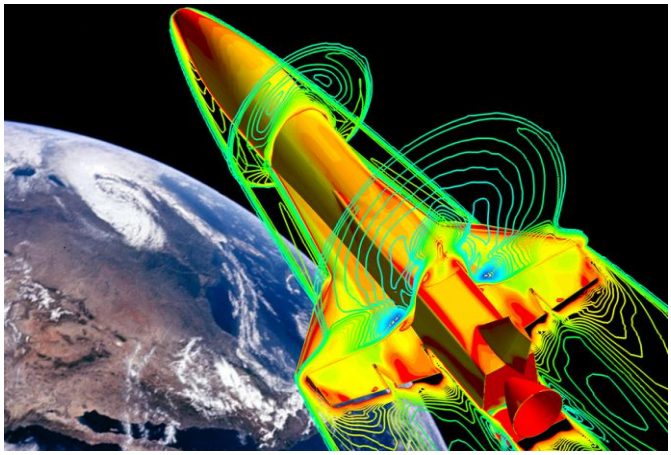

Course Contents

11.1. Introduction

11.2. Basic Equation of One Dimensional Compressible Flow

11.3. Velocity of Sound in Fluid

11.4. Mach Number

11.5. Propagation of Pressure Waves in a Compressible Fluid

11.6. Stagnation Properties

11.7. Solved Numericals

11.1 Introduction

- Compressible flow is defined as that flow in which the density of the fluid does not remains constant during flow. This means density changes from point to point in compressible flow.
- Examples:
  - The flight of projectiles and airplanes moving at high altitudes.
  - Flow of gases through orifices and nozzles.
  - Flow of gases in machines such as compressors.

11.2 Basic Equation of One Dimensional Compressible Flow

- The basic equations of the compressible flows are:
  1. Continuity equation
  2. Bernoulli's equation
  3. Momentum equation
  4. Equation of state

11.2.1 Continuity Equation

- This equation based on law of conservation of mass which states that matter cannot be created nor destroyed. Or in other words, matter or mass is constant.
- For one dimension steady flow,

  Mass per second $= \rho AV$

  Where $\rho =$ Mass Density, A = Area of cross section, V = Velocity
- As mass or mass per second is constant according to law of conservation of mass. Hence

$$\rho AV = \text{Constant}$$

Differentiating above equation,

$$d(\rho AV) = 0$$

$$\therefore \ \rho d(AV) + AVd\rho = 0$$

$$\therefore \ \rho[AdV + VdA] + AVd\rho = 0$$

$$\therefore \ \rho AdV + \rho VdA + AVd\rho = 0$$

Divided by ρAV, we get

$$\boxed{\frac{dV}{V} + \frac{dA}{A} + \frac{d\rho}{\rho} = 0}$$

- Above equation is known as continuity equation in differential form.

11.2.2 Bernoulli's Equation

- For compressible fluid flow, Euler's equation of motion is given by,

$$\frac{dP}{\rho} + VdV + gdZ = 0$$

- Integrating above equation, we get,

$$\int \frac{dP}{\rho} + \int VdV + \int gdZ = \text{Constant}$$

$$\int \frac{dP}{\rho} + \frac{V^2}{2} + gZ = \text{Constant} \qquad \cdots\cdots\cdots(1)$$

(A) Bernoulli's Equation for Isothermal Process

– For isothermal process the relation between the pressure and density is given by,

$$\frac{P}{\rho} = \text{Constant} = C_1$$

$$\therefore \rho = \frac{P}{C_1}$$

Hence $$\int \frac{dp}{\rho} = \int \frac{dp}{P/C_1} = C_1 \int \frac{dp}{p} = C_1 \ln p = \frac{P}{\rho} \ln p$$

– Substitute the value of $\int \frac{dp}{\rho}$ in equation 1. We get

$$\frac{p}{\rho} \ln p + \frac{V^2}{2} + gZ = \text{Constant}$$

$$\boxed{\therefore \frac{p}{\rho g} \ln p + \frac{V^2}{2g} + Z = \text{Constant}} \qquad (\because \text{Dividing by 'g'})$$

– Above equation is the Bernoulli's equation for compressible flow undergoing isothermal process. For the two point 1 and 2. This equation is written as,

$$\boxed{\frac{p_1}{\rho_1 g} \ln p_1 + \frac{V_1^2}{2g} + Z_1 = \frac{p_2}{\rho_2 g} \ln p_2 + \frac{V_2^2}{2g} + Z_2}$$

(B) Bernoulli's Equation for Adiabatic Process

– For adiabatic process the relation between the pressure and density is given by,

$$\frac{p}{\rho^k} = \text{Constant} = C_2 \qquad \cdots\cdots\cdots(2)$$

$$\therefore \rho_k = \frac{p}{C_2} \quad \text{or } \rho = \left(\frac{p}{C_2}\right)^{1/k}$$

Hence, $$\int \frac{dp}{\rho} = \int \frac{dp}{\left(\frac{p}{C_2}\right)^{1/k}} = \int \frac{C_2^{1/k}}{p^{1/k}} dp$$

$$= C_2^{1/k} \int \frac{1}{p^{1/k}} dp$$

$$= C_2^{1/k} \int p^{-1/k} dp$$

$$= C_2^{1/k} \frac{p^{\left(-\frac{1}{k}+1\right)}}{\left(-\frac{1}{k}+1\right)}$$

$$= \frac{C_2^{1/k} p^{\left(\frac{k-1}{k}\right)}}{\left(\frac{k-1}{k}\right)}$$

$$= \left(\frac{k}{k-1}\right) C_2^{1/k} p^{\left(\frac{k-1}{k}\right)}$$

$$= \left(\frac{k}{k-1}\right)\left(\frac{p}{\rho^k}\right)^{1/k} p^{\left(\frac{1-k}{k}\right)} \qquad \left(\because \text{From equation (2)} \quad C_2^{1/k} = \left(\frac{p}{\rho^k}\right)^{1/k}\right)$$

$$= \left(\frac{k}{k-1}\right)\left(\frac{p^{\frac{1}{k}+\frac{k-1}{k}}}{\rho}\right)$$

$$= \left(\frac{k}{k-1}\right)\frac{p}{\rho}$$

- Substitute the above value in equation (1) ,

$$\therefore \left(\frac{k}{k-1}\right)\frac{p}{\rho} + \frac{V^2}{2} + gZ = \text{Constant}$$

$$\boxed{\therefore \left(\frac{k}{k-1}\right)\frac{p}{\rho g} + \frac{V^2}{2g} + Z = \text{Constant}} \qquad (\because \text{Dividing by 'g'})$$

- Above equation is the Bernoulli's equation for compressible flow undergoing adiabatic process. For the two points 1 and 2,this equation is written as,

$$\boxed{\left(\frac{k}{k-1}\right)\frac{p_1}{\rho_1 g} + \frac{V_1^2}{2g} + Z_1 = \left(\frac{k}{k-1}\right)\frac{p_2}{\rho_2 g} + \frac{V_2^2}{2g} + Z_2}$$

11.2.3 Momentum Equation

- The momentum per second of flowing fluid (or momentum flux) is equal to the product of mass per second and the velocity of flow.
- Mathematically momentum per second of flowing fluid is,

$$= \rho AV \times V$$

- The momentum equation for compressible fluid for any direction may be expressed as,

Net force in the direction of S = Rate of change of momentum in the direction of S

= Mass per second $\times$ Change of velocity

$= \rho AV\left[V_2 - V_1\right]$

Where $V_2 =$ Final velocity in the direction of S

$V_1 =$ Initial velocity in the direction of S

11.3 Velocity of Sound in Fluid or Pressure Wave Propagation

- The disturbance in a solid, liquid or gas is transmitted form one point to the other point and the velocity with which the disturbance is transmitted is depends upon the distance between the molecules of the medium.
- In case of solid, molecules are closely packed, thus disturbance transmitted instantly. In case of liquid and gases the molecules are relatively apart and disturbance will be transmitted from one molecule to next molecule, but in fluid, there is some distance between two adjacent molecules, hence each molecule has to travel a certain distance before it can transmitted the disturbance. Thus the velocity of disturbance in fluid will be less than that of solids.

11.3.1 Expression for Velocity of Sound Wave in a Fluid

- Fig. shows the right long pipe of uniform cross section area, fitted with piston. Let the pipe is filled with compressible fluid, which is rest initially. The piston is moved towards right and a disturbance is created in the form of pressure wave, which travels in fluid with a velocity of sound wave.

  Let,

  $A =$ Cross section area of pipe

  $V =$ Velocity of piston

  $p =$ Pressure of the fluid in pipe before the movement of the piston

  $\rho =$ Density of fluid before movement of the piston

  $dt =$ A small interval of time with which piston is moved

  $C =$ Velocity of pressure wave or sound wave travelling in the fluid

- Distance travelled by the piston in time dt

  $= \text{Velocity of piston} \times dt$

  $= V \times dt$

- Distance travelled by the pressure wave in time dt

  $= \text{Velocity of pressure wave} \times dt = C \times dt$

- As the value of the C is very large, hence $C \times dt$ will be more than $V \times dt$.
- For the time interval dt, the pressure wave has travelled a distance L and piston has moved through x. Thus in the length of the tube equal $(L - x)$, the fluid will be compressed .
- Due to compression of fluid, the pressure and density of fluid will be change.

  Let,

  $p + dp =$ Pressure after compression

  $\rho + d\rho =$ Density after compression

- Mass of fluid for a length L before compression

  $= \rho \times \text{Volume of fluid up to length } L$

  $= \rho \times A \times L$

  $= \rho \times A \times C \times dt \qquad (\therefore L = Cdt)$

- Now mass of fluid after compression for length $(L-x)$

  $=$ Density after compression $\times$ Area $\times$ Length

$$=(\rho+d\rho)A\times(L-x)$$
$$=(\rho+d\rho)A\times(Cdt-Vdt)$$

- From the continuity equation, we have
- Mass of fluid before compression = Mass of fluid after compression

$$\therefore\ \rho ACdt=(\rho+d\rho)A\times(Cdt-Vdt)$$
$$\therefore\ \rho ACdt=(\rho+d\rho)A\times dt(C-V)$$

Divided by Adt

$$\therefore\ \rho C=(\rho+d\rho)\times(C-V)=\rho C-\rho V+Cd\rho-Vd\rho$$
$$\therefore\ Cd\rho=\rho C-\rho C+\rho V+Vd\rho$$
$$\therefore\ Cd\rho=\rho V+Vd\rho$$

- But the velocity of piston is very small compared to the velocity of pressure wave C and $d\rho$ is very small. Hence the term $Vd\rho$ can be neglected and equation becomes,

$$Cd\rho=\rho V \qquad \cdots\cdots\cdots(1)$$

- Applying the impulse momentum equation, we get

  Net force on the fluid $=$ Rate of change of momentum

$$(p+dp)A-p\times A=\text{Mass per second}$$
$$dp\times A=\frac{\text{Total mass}}{\text{Time}}[V-0]=\frac{\rho AL}{dt}[V-0]$$
$$=\frac{\rho ACdt}{dt}[V-0]=\rho ACV \qquad (\because\ L=Cdt)$$
$$\therefore dp=\frac{\rho ACV}{A}=\rho C\times V$$
$$C=\frac{dp}{\rho V} \qquad \cdots\cdots\cdots(2)$$

- Multiplying equation (1) and (2),

$$\therefore C^2d\rho=\rho V\times\frac{dp}{\rho V}=dp$$
$$\therefore C^2=dp$$
$$\boxed{\therefore C=\sqrt{\frac{dp}{d\rho}}} \qquad \cdots\cdots\cdots(3)$$

- This equation is for velocity of sound wave.

11.3.2 Expression for Velocity of Sound in terms of Bulk Modulus

- Bulk Modulus K is defined as,

$$K = \frac{\text{Increase in pressure}}{\dfrac{\text{Decrease in volume}}{\text{Origin Volume}}} = \frac{dp}{\left(-\dfrac{d\forall}{\forall}\right)} \qquad \cdots\cdots\cdots(4)$$

Where $d\forall =$ Decrease in volume $\forall =$ original volume

- But, mass of fluid is constant. Hence

$$\rho \times \forall = \text{Constant}$$

- Differentiating the above equation,

$$\rho d\forall + \forall d\rho = 0 \text{ or } \rho d\forall = -\forall d\rho \text{ or } \frac{-d\forall}{\forall} = \frac{d\rho}{\rho}$$

- Substituting the value of $\left(-\dfrac{d\forall}{\forall}\right)$ in equation (4)

$$\therefore K = \frac{dp}{\dfrac{d\rho}{\rho}} = \rho\frac{dp}{d\rho}$$

$$\therefore \frac{dp}{d\rho} = \frac{K}{\rho}$$

- From equation (3), the velocity of sound wave is,

$$\boxed{\therefore C = \sqrt{\frac{dp}{d\rho}} = \sqrt{\frac{K}{\rho}}}$$

11.3.3 Expression for Velocity of Sound for Isothermal Process

- Isothermal process is given by equation, as

$$\frac{p}{\rho} = \text{Constant or } p\rho^{-1} = \text{Constant}$$

- Differentiating the above equation,

$$p(-1)\rho^{-2}d\rho + \rho^{-1}d\rho = 0$$

- Divided by ρ^{-1}, We get

$$\therefore -p\rho^{-1}d\rho + dp = 0$$

$$\therefore \frac{-p}{\rho}d\rho + dp = 0$$

$$\therefore dp = \frac{p}{\rho}d\rho$$

$$\therefore \frac{dp}{d\rho} = \frac{p}{\rho} = RT \qquad \left(\because \text{From equation of state } \frac{p}{\rho} = RT\right)$$

- Substitute the value of $\dfrac{dp}{d\rho}$ in equation (3),

$$\boxed{C = \sqrt{\frac{p}{\rho}} = \sqrt{RT}}$$

11.3.4 Expression for Velocity of Sound for Adiabatic Process

- Adiabatic process is given by equation is,

$$\frac{p}{\rho^k} = \text{Constant or } p\rho^k = \text{Constant}$$

- Differentiating the above equation, we get

$$p(-k)\rho^{-k-1}d\rho + \rho^{-k}dp = 0$$

- Divided by ρ^{-k}

$$\therefore -pk\rho^{-1}d\rho + dp = 0$$

$$\therefore dp = \frac{pk}{\rho}d\rho$$

$$\therefore \frac{dp}{d\rho} = \frac{p}{\rho}k = RTk \qquad \left(\because \frac{p}{\rho} = RT\right)$$

- Substitute the value of $\frac{dp}{d\rho}$ in equation (3), we get

$$\boxed{C = \sqrt{kRT}}$$

11.4 Mach Number

- Mach number is defined as the ratio of square root of inertia force of a flowing fluid to the elastic force.

Mach number $M = \sqrt{\frac{\text{Inertia force}}{\text{Elastic force}}} = \sqrt{\frac{\rho AV^2}{KA}} = \sqrt{\frac{V^2}{K/\rho}} = \frac{V}{\sqrt{K/\rho}} = \frac{V}{C}$

- Thus Mach number is define as the ratio of the Velocity of body in fluid to velocity of sound in fluid.
- On the basis of Mach number, the flow is defined as Sub-sonic flow, sonic flow, and Super-sonic flow.

1. Sub-sonic flow

- A flow is said to be subsonic if the Mach number is less than 1 $(M<1)$. Which means velocity of flow (V) is less than the velocity of sound wave (C) .

2. Sonic flow

- A flow is said to be sonic if the Mach number is equal to 1 $(M=1)$. Which means velocity of flow (V) is equal to the velocity of sound wave (C).

3. Super-sonic flow

- A flow is said to be super-sonic if the Mach number is greater than 1 $(M>1)$. Which means velocity of flow (V) is greater than the velocity of sound wave (C).

11.5 Propagation of Pressure Waves in a Compressible Fluid

- Whenever any disturbance is produced in a compressible fluid, the disturbance is propagates in all directions with a velocity of sound. The nature of propagation of the disturbance depends upon the Mach number. Let us consider a small projectile moving from left to right in a straight line in a stationary fluid. Due to movement of the projectile, the disturbances will be created in the fluid. This disturbance will be moving in all directions with a velocity C.

  Let $V =$ Velocity of the projectile

  $C =$ Velocity of pressure wave or disturbance or disturbance created in the fluid

Case-1 When $M < 1$

- In this case, the pressure wave is always ahead of the projectile.

Case-2 When $M = 1$

- In this case, the disturbance always travels with the projectile.

Case-3 When $M > 1$

- In this case sphere of propagation of disturbance always lags behind the projectile.

- **<u>Mach Angle</u>:** It is define as the half of the angle of the Mach cone. In above fig. α is known as Mach angle.

$$\sin\alpha = \frac{1}{M}$$

- **<u>Zone of action</u>:** When $M > 1$, the effect of disturbance is felt only in the region inside the Mach cone. This region is called zone of action.
- **<u>Zone of silence</u>:** When $M > 1$, there is no effect of disturbance in the region outside the Mach cone. The region which is outside the Mach cone is called zone of silence.

11.6 Stagnation Properties

- When the fluid is flowing past an immersed body and at a point if the **resultant velocity becomes zero,** the values of pressure, temperature and density at that point are called ***stagnation properties***. The point is called the ***stagnation point.***

11.6.1 Expression for Stagnation Pressure

- Consider a compressible fluid flowing past an immersed body under frictionless adiabatic conditions as with two points 1 and 2 on a stream-line.

  Let,

  $p_1 =$ Pressure of compressible fluid at point 1

  $V_1 =$ Velocity of fluid at 1

  $\rho_1 =$ Density of fluid at 1

  $p_2, V_2, \rho_2 =$ Corrosponding values of pressure, velocity and density at point 2

- Applying Bernoulli's equation for adiabatic flow for points 1 and 2,

$$\left(\frac{k}{k-1}\right)\frac{p_1}{\rho_1 g}+\frac{V_1^2}{2g}+Z_1=\left(\frac{k}{k-1}\right)\frac{p_2}{\rho_2 g}+\frac{V_2^2}{2g}+Z_2$$

But $Z_1 = Z_2$

$$\therefore \left(\frac{k}{k-1}\right)\frac{p_1}{\rho_1 g}+\frac{V_1^2}{2g}=\left(\frac{k}{k-1}\right)\frac{p_2}{\rho_2 g}+\frac{V_2^2}{2g}$$

- Point 2 is stagnation point, hence velocity will become zero and pressure and density denoted by p_s and ρ_s.
- Substitute $V_2 = 0, p_2 = p_s, \rho_2 = \rho_s$ in above equation,

$$\therefore \left(\frac{k}{k-1}\right)\frac{p_1}{\rho_1}+\frac{V_1^2}{2}=\left(\frac{k}{k-1}\right)\frac{p_s}{\rho_s}+0$$

$$\therefore \left(\frac{k}{k-1}\right)\left[\frac{p_1}{\rho_1}-\frac{p_s}{\rho_s}\right]=-\frac{V_1^2}{2}$$

$$\therefore \left(\frac{k}{k-1}\right)\frac{p_1}{\rho_1}\left[1-\frac{p_s}{\rho_s}\times\frac{\rho_1}{p_1}\right]=-\frac{V_1^2}{2}$$

$$\therefore \left(\frac{k}{k-1}\right)\frac{p_1}{\rho_1}\left[1-\frac{p_s}{p_1}\times\frac{\rho_1}{\rho_s}\right]=-\frac{V_1^2}{2} \qquad \cdots\cdots\cdots(1)$$

- But for adiabatic process, we have

$$\frac{p}{\rho^k}=\text{Constant or } \frac{p_1}{\rho_1^{\,k}}=\frac{p_s}{\rho_s^{\,k}}$$

$$\therefore \frac{p_1}{p_s}=\frac{\rho_1^{\,k}}{\rho_s^{\,k}}$$

$$\therefore \left(\frac{\rho_1}{\rho_s}\right)=\left(\frac{p_1}{p_s}\right)^{\frac{1}{k}} \qquad \cdots\cdots\cdots(2)$$

- Substituting the value of $\frac{\rho_1}{\rho_s}$ in equation(1),

$$\therefore \left(\frac{k}{k-1}\right)\frac{p_1}{\rho_1}\left[1-\frac{p_s}{p_1}\times\left(\frac{p_1}{p_s}\right)^{\frac{1}{k}}\right]=-\frac{V_1^2}{2}$$

$$\therefore \left(\frac{k}{k-1}\right)\frac{p_1}{\rho_1}\left[1-\frac{p_s}{p_1}\times\left(\frac{p_s}{p_s}\right)^{-\frac{1}{k}}\right]=-\frac{V_1^2}{2}$$

$$\therefore \left(\frac{k}{k-1}\right)\frac{p_1}{\rho_1}\left[1-\left(\frac{p_s}{p_1}\right)^{1-\frac{1}{k}}\right]=-\frac{V_1^2}{2}$$

$$\therefore \left[1-\left(\frac{p_s}{p_1}\right)^{\frac{k-1}{k}}\right]=-\frac{V_1^2}{2}\times\left(\frac{k-1}{k}\right)\frac{\rho_1}{p_1}$$

$$\therefore 1+\frac{V_1^2}{2}\left(\frac{k-1}{k}\right)\frac{\rho_1}{p_1}=\left(\frac{p_s}{p_1}\right)^{\frac{k-1}{k}}$$

- Now for adiabatic process, the velocity of sound is given by,

$$C=\sqrt{kRT}=\sqrt{k\frac{p}{\rho}}$$

- For point 1

$$C_1=\sqrt{k\frac{p_1}{\rho_1}} \text{ or } C_1^2=k\frac{p_1}{\rho_1}$$

- Substituting this value in above equation

$$\therefore\ 1+\frac{V_1^2}{2}(k-1)\times\frac{1}{C_1^2}=\left(\frac{p_s}{p_1}\right)^{\frac{k-1}{k}}$$

$$\therefore 1+\frac{V_1^2}{2C_1^2}(k-1)=\left(\frac{p_s}{p_1}\right)^{\frac{k-1}{k}}$$

$$\therefore 1+\frac{M_1^2}{2}(k-1)=\left(\frac{p_s}{p_1}\right)^{\frac{k-1}{k}} \qquad \left(\because\ \frac{V}{C}=M\right)$$

$$\therefore \left(\frac{p_s}{p_1}\right)^{\frac{k-1}{k}}=1+\frac{(k-1)}{2}M_1^2$$

$$\therefore \frac{p_s}{p_1}=\left[1+\frac{(k-1)}{2}M_1^2\right]^{\left(\frac{k}{k-1}\right)} \qquad \cdots\cdots\cdots(3)$$

$$\boxed{\therefore p_s=p_1\left[1+\frac{(k-1)}{2}M_1^2\right]^{\left(\frac{k}{k-1}\right)}} \qquad \cdots\cdots\cdots(4)$$

11.6.2 Expression for Stagnation Density

- From equation (2)

$$\left(\frac{\rho_1}{\rho_s}\right)=\left(\frac{p_1}{p_s}\right)^{\frac{1}{k}} \text{ or } \left(\frac{\rho_s}{\rho_1}\right)=\left(\frac{p_s}{p_1}\right)^{\frac{1}{k}}$$

$$\therefore \rho_s = \rho_1 \left(\frac{p_s}{p_1}\right)^{\frac{1}{k}}$$

– Substitute the value of $\frac{p_s}{p_1}$ from equation (3)

$$\therefore \rho_s = \rho_1 \left[\left(1+\frac{(k-1)}{2}M_1^2\right)^{\left(\frac{k}{k-1}\right)}\right]^{\frac{1}{k}}$$

$$\boxed{\therefore \rho_s = \rho_1 \left[\left(1+\frac{(k-1)}{2}M_1^2\right)\right]^{\frac{1}{k-1}}} \qquad \cdots\cdots\cdots(5)$$

11.6.3 Expression for Stagnation Temperature

– Equation of state is given by $\frac{p}{\rho} = RT$

– For the stagnation point, we have equation of state as $\frac{p_s}{\rho_s} = RT_s$ or $T_s = \frac{1}{R}\frac{p_s}{\rho_s}$

– Substituting the value of p_s and ρ_s from equation (4) and (5), we have

$$T_s = \frac{1}{R}\frac{p_1\left[1+\left(\frac{k-1}{2}\right)M_1^2\right]^{\left(\frac{k}{k-1}\right)}}{\rho_1\left[1+\left(\frac{k-1}{2}\right)M_1^2\right]^{\left(\frac{1}{k-1}\right)}}$$

$$= \frac{p_1}{\rho_1 R}\left[1+\left(\frac{k-1}{2}\right)M_1^2\right]$$

$$\boxed{\therefore T_s = T_1\left[1+\left(\frac{k-1}{2}\right)M_1^2\right]}$$

11.7 Solved Numerical

Example 1. A projectile is travelling in an air having pressure and temperature as 8.829 N/cm^2 and -2^0C. If the Mach angle is 40^0 then find the Mach number and velocity of projectile. Take K=1.4 and R=287 J/kg K.

Solution:

Given Data:

$p = 8.829 \times 10^4 \, {}^{N}/_{m^2}$

$T = -2^0C = 271K$

$K = \gamma = 1.4$

$R = 287 \, J/kgK$

$\alpha = 40^0$

To Find:

a) $V = ?$

b) $M = ?$

→ Velocity of projectile

We know,

$$M = \frac{V}{C} = \frac{V}{\sqrt{\gamma RT}} \; and \; M = \frac{1}{sin\alpha}$$

From above equation,

$$V = \frac{\sqrt{\gamma RT}}{sin\alpha} = 513.360 \, {}^{m}/_{s} = 1848.09 \, {}^{km}/_{h}$$

→ Mach number (M),

$$M = \frac{V}{C} = \frac{V}{\sqrt{\gamma RT}} = 1.55$$

Example 2. At what speed the shock wave propels in the flow in the air at 1750 kN/m^2 absolute, is moving at 150 m/s in the high pressure wind tunnel at 40^0C. Take R=287 J/kgK State whether the flow is supersonic or not.

Solution

Given Data:

$p = 1750 \times 10^3 \, {}^{N}/_{m^2}$

$T = 40^0C = 313K$

$V = 150 \, {}^{m}/_{s}$

$R = 287 \, J/kgK$

To Find:

a) $C = ?$

b) $M = ?$

→ Sound velocity,

$$C = \sqrt{\gamma RT} = 354.63 \, {}^{m}/_{s}$$

→ Mach number,

$$M = \frac{V}{C} = \frac{V}{\sqrt{\gamma RT}} = 0.423$$

Here, $M < 1$ therefore, flow is subsonic.

Example 3. A supersonic airplane is flying at 1500 km/hr at an altitude of $10km$ above sea level in standard atmosphere. The pressure and density are as 2.5 N/cm^2 absolute and 0.4 kg/m^3 Calculate the pressure, temperature and density at the stagnation point on the nose of the plane. Assume $R = 287\ J/kgK$ and $\gamma = 1.4$

Solution

Given Data:

$V_1 = 1500\ km/hr = 416.66\ m/s$

$h = 10km$

$p_1 = 2.5 \times 10^4\ {}^{N}/_{m^2}$

$\rho_1 = 0.4\ {}^{kg}/_{m^3}$

$R = 287\ J/kgK$

$\gamma = 1.4$

To be Calculated:

a) $\rho_0 = ?$

b) $p_0 = ?$

c) $T_0 = ?$

→ Sonic velocity

$$C_1 = \sqrt{\gamma R T_1} = \sqrt{\gamma \frac{p_1}{\rho_1}} = 295.8\ {}^{m}/_{s}$$

→ Mach number (M_1),

$$M_1 = \frac{V_1}{C_1} = 1.4085$$

→ Stagnation pressure(p_0),

$$p_0 = p_1 \times \left[1 + \frac{\gamma-1}{2} M_1{}^2\right]^{\frac{\gamma}{\gamma-1}} = 80515.964\ {}^{N}/_{m^2}$$

→ Stagnation temperature(T_0),

$$T_0 = T_1 \times \left[1 + \frac{\gamma-1}{2} M_1{}^2\right] = \frac{p_1}{\rho_1 R}\left[1 + \frac{\gamma-1}{2} M_1{}^2\right] = 304.1756K$$

→ Stagnation density(ρ_0),

$$\rho_0 = \rho_1 \times \left[1 + \frac{\gamma-1}{2} M_1{}^2\right]^{\frac{1}{\gamma-1}} = 0.9223\ {}^{kg}/_{m^3}$$