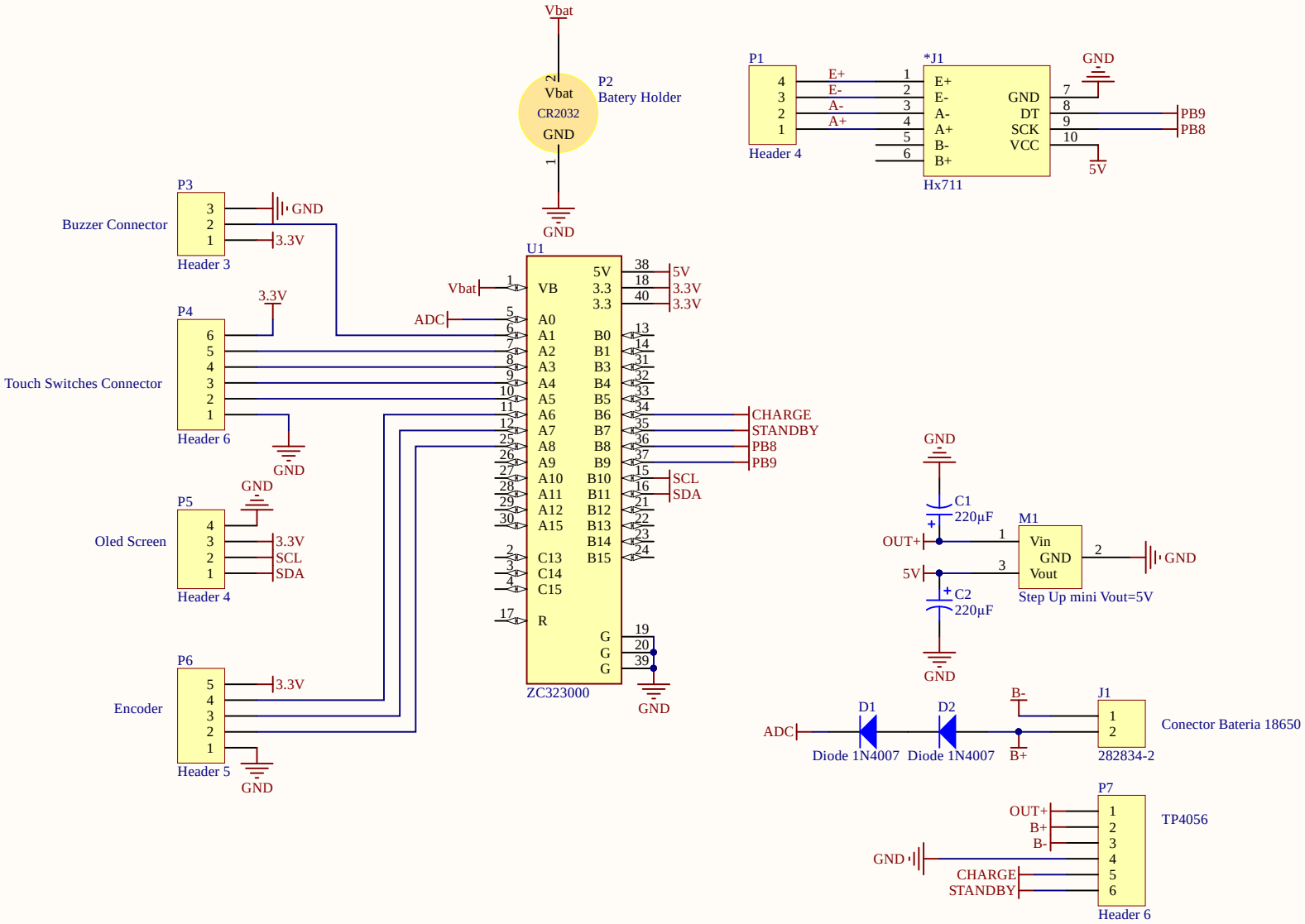

Title		
Size A	Number	Revision
Date: 29/8/2023		Sheet of
File: C:\Users\..\Esquematico.SchDoc		Drawn By: