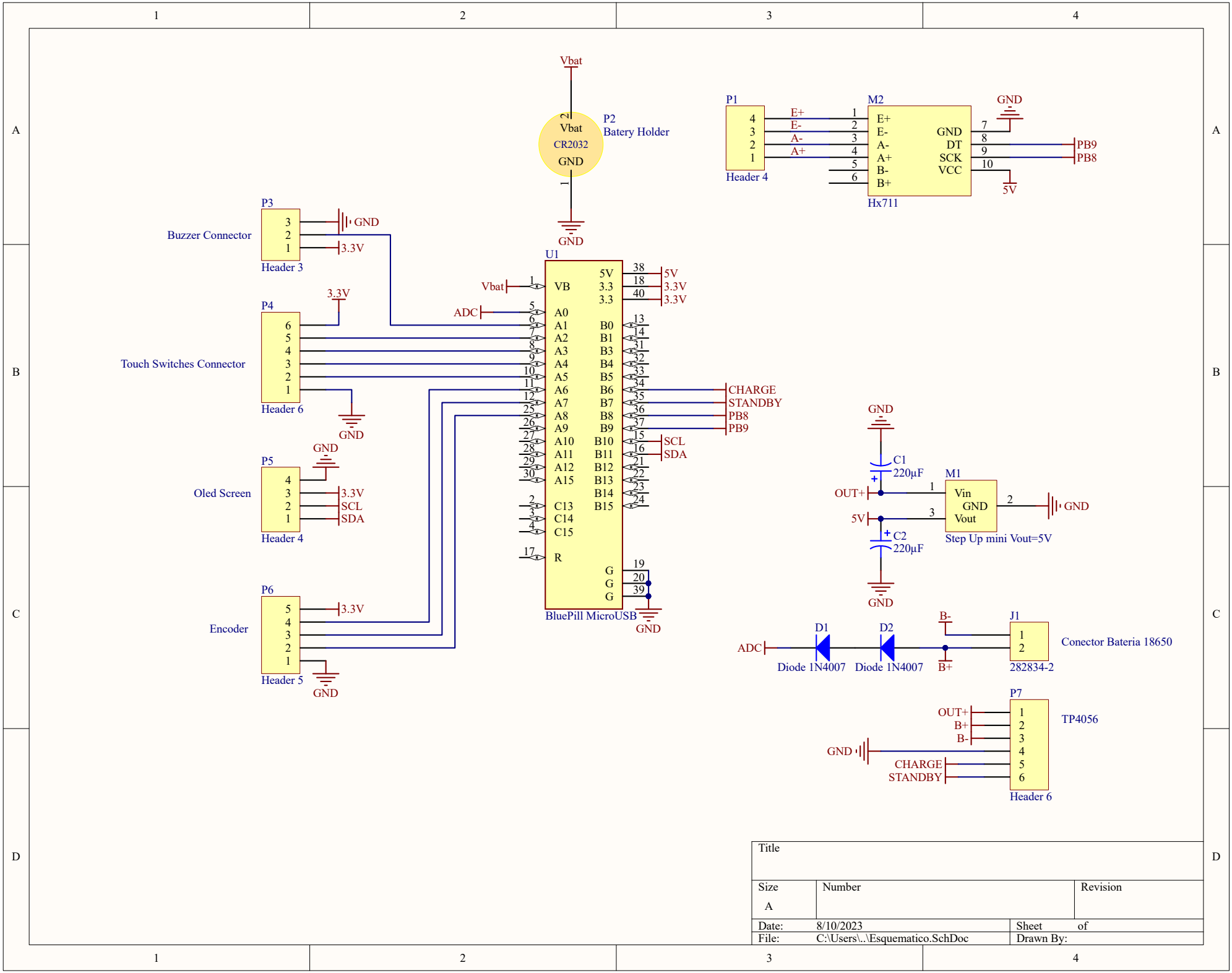
Vbat
P2
Batery Holder
CR2032
GND
P1
Header 4
E+
E-
A-
A+
M2
Hx711
GND
DT
SCK
VCC
PB9
PB8
5V
P3
Buzzer Connector
Header 3
3.3V
P4
Touch Switches Connector
Header 6
U1
BluePill MicroUSB
VB
ADC
CHARGE
STANDBY
SCL
SDA
P5
Oled Screen
Header 4
P6
Encoder
Header 5
C1
220µF
C2
220µF
OUT+
M1
Vin
Vout
Step Up mini Vout=5V
D1
D2
Diode 1N4007
B-
B+
J1
282834-2
Conector Bateria 18650
P7
TP4056
Header 6
Title
Size
A
Number
Revision
Date:
8/10/2023
Sheet
of
File:
C:\Users\..\Esquematico.SchDoc
Drawn By: