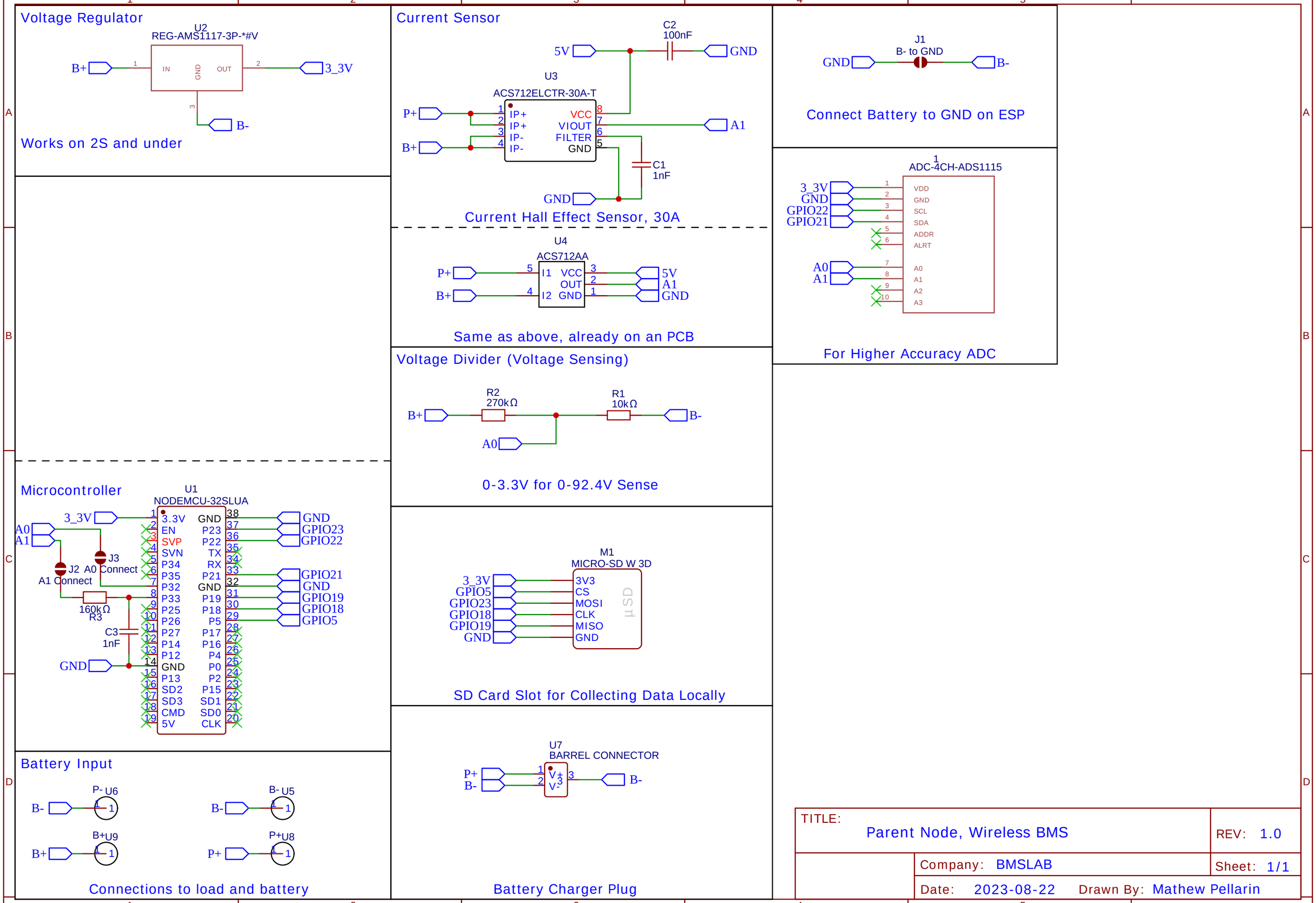

TITLE: Parent Node, Wireless BMS	REV: 1.0
Company: BMSLAB	Sheet: 1/1
Date: 2023-08-22 Drawn By: Mathew Pellarin	