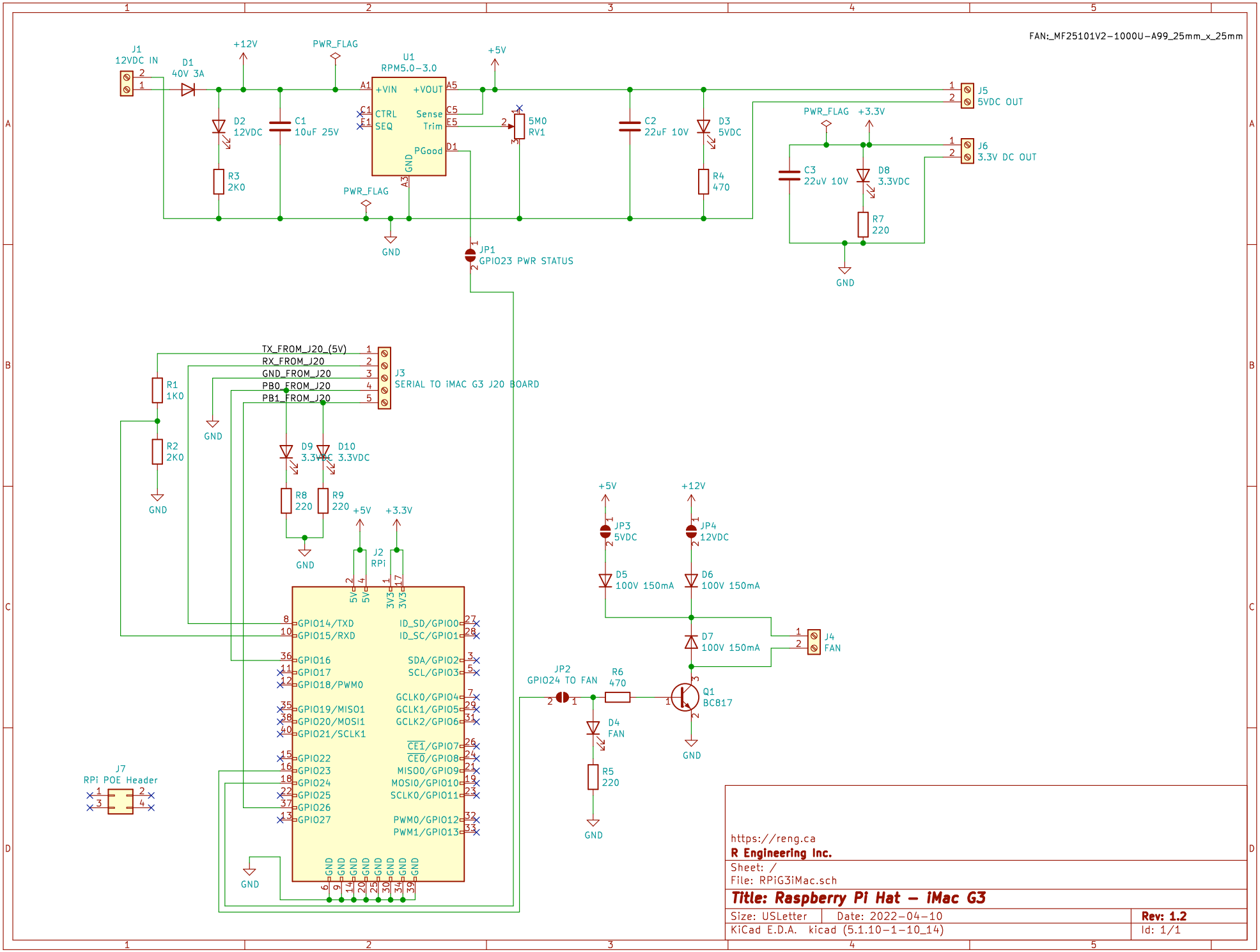
FAN:_MF25101V2-1000U-A99_25mm_x_25mm
J1
12VDC IN
D1
40V 3A
+12V
PWR_FLAG
U1
RPM5.0-3.0
+VIN
+VOUT
CTRL
SEQ
Sense
Trim
PGood
GND
+5V
D2
12VDC
C1
10uF 25V
R3
2K0
5M0
RV1
C2
22uF 10V
D3
5VDC
R4
470
J5
5VDC OUT
+3.3V
C3
22uV 10V
D8
3.3VDC
R7
220
J6
3.3V DC OUT
JP1
GPIO23 PWR STATUS
TX_FROM_J20_(5V)
RX_FROM_J20
GND_FROM_J20
PB0_FROM_J20
PB1_FROM_J20
J3
SERIAL TO iMAC G3 J20 BOARD
R1
1K0
R2
2K0
D9
3.3VDC
D10
3.3VDC
R8
220
R9
220
J2
RPi
GPIO14/TXD
GPIO15/RXD
GPIO16
GPIO17
GPIO18/PWM0
GPIO19/MISO1
GPIO20/MOSI1
GPIO21/SCLK1
GPIO22
GPIO23
GPIO24
GPIO25
GPIO26
GPIO27
ID_SD/GPIO0
ID_SC/GPIO1
SDA/GPIO2
SCL/GPIO3
GCLK0/GPIO4
GCLK1/GPIO5
GCLK2/GPIO6
CE1/GPIO7
CE0/GPIO8
MISO0/GPIO9
MOSI0/GPIO10
SCLK0/GPIO11
PWM0/GPIO12
PWM1/GPIO13
J7
RPi POE Header
JP3
5VDC
JP4
12VDC
D5
100V 150mA
D6
100V 150mA
D7
100V 150mA
J4
FAN
JP2
GPIO24 TO FAN
R6
470
Q1
BC817
D4
FAN
R5
220
https://reng.ca
R Engineering Inc.
Sheet: /
File: RPiG3iMac.sch
Title: Raspberry Pi Hat – iMac G3
Size: USLetter
Date: 2022-04-10
Rev: 1.2
KiCad E.D.A. kicad (5.1.10-1-10_14)
Id: 1/1