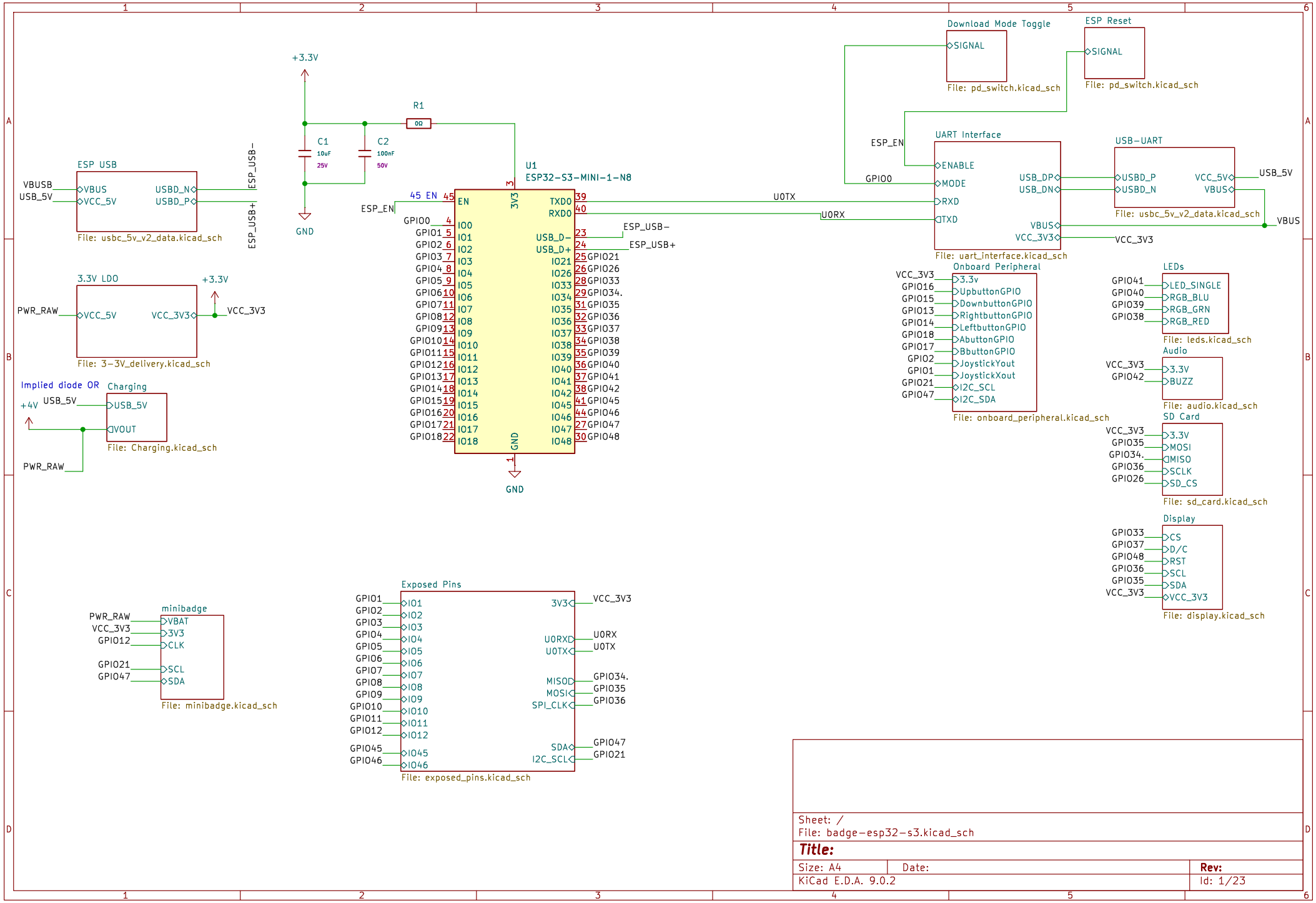

Sheet: /
File: badge-esp32-s3.kicad_sch

Title:

Size: A4	Date:	Rev:
KiCad E.D.A. 9.0.2		Id: 1/23

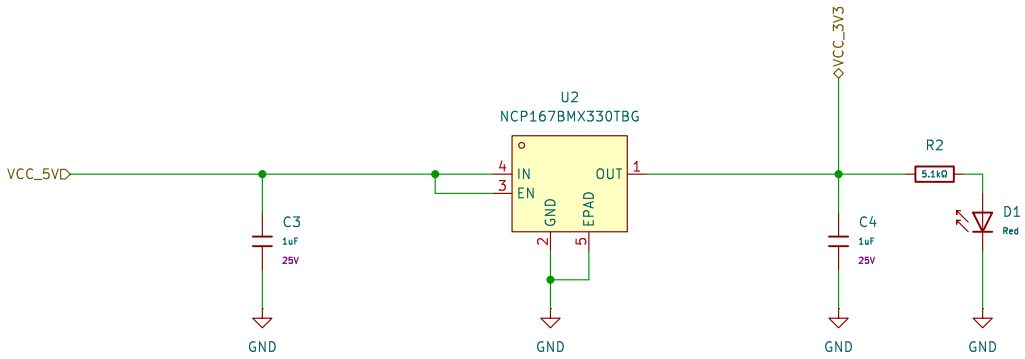

Sheet: /3.3V LDO/
File: 3-3V_delivery.kicad_sch

Title:

Size: A4	Date:	**Rev:**
KiCad E.D.A. 9.0.2		Id: 2/23

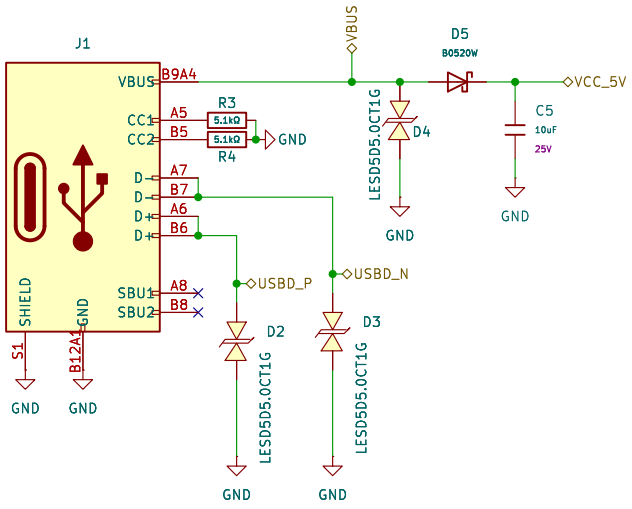

Sheet: /USB-UART/
File: usbc_5v_v2_data.kicad_sch

Title:

Size: A4	Date:	**Rev:**
KiCad E.D.A. 9.0.2		Id: 3/23

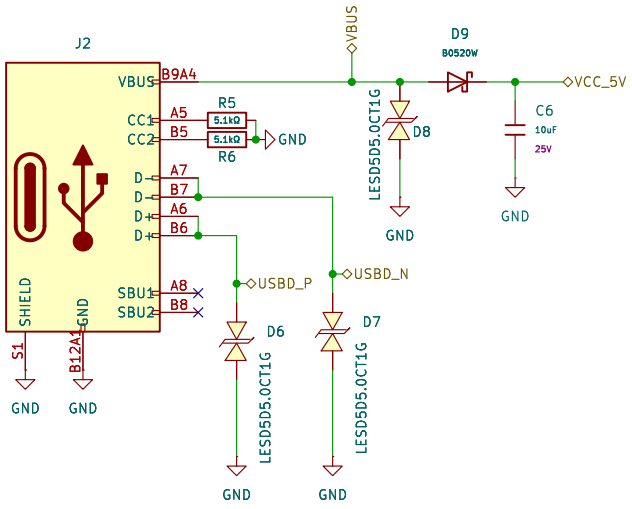

Sheet: /ESP USB/
File: usbc_5v_v2_data.kicad_sch

Title:

Size: A4	Date:	**Rev:**
KiCad E.D.A. 9.0.2		Id: 4/23

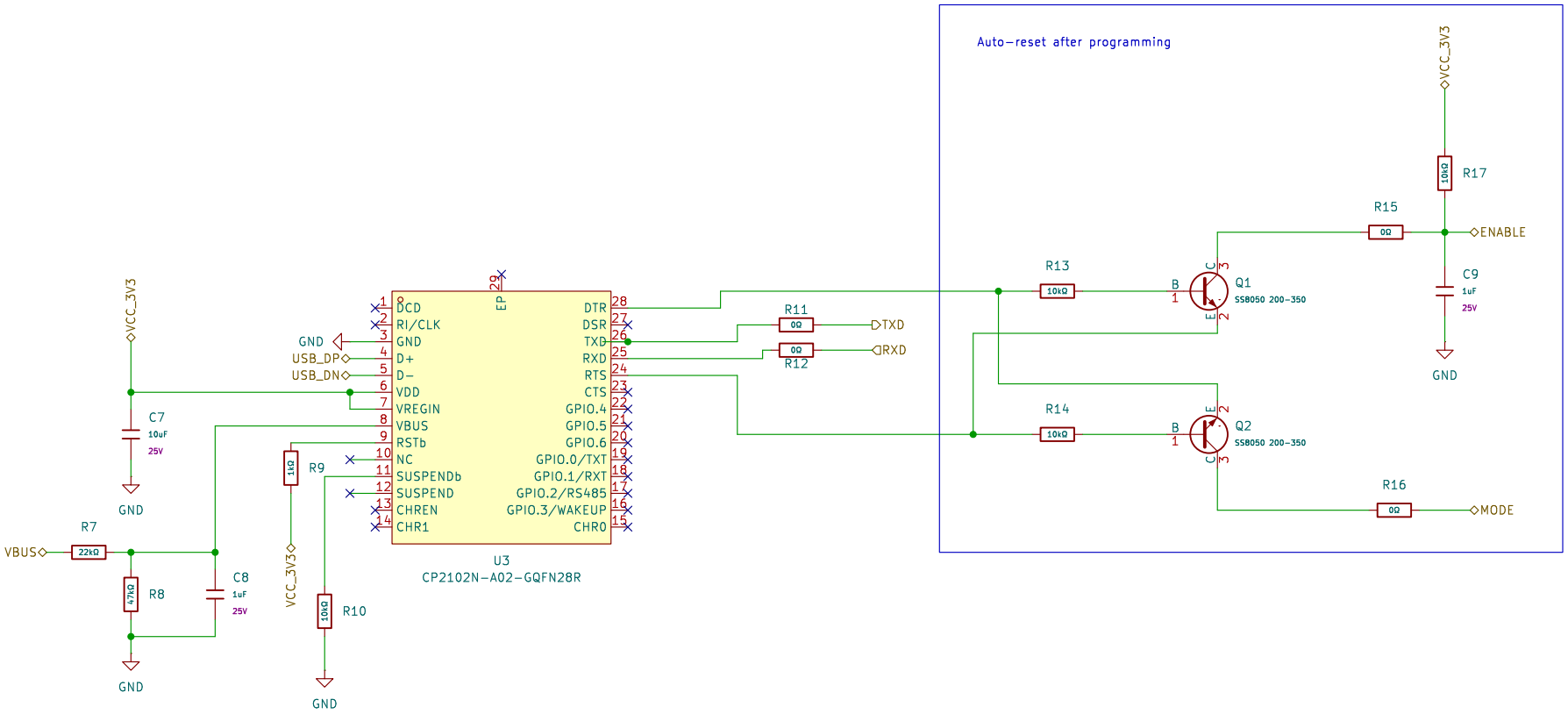

Sheet: /UART Interface/
File: uart_interface.kicad_sch

Title:

Size: A4	Date:	Rev:
KiCad E.D.A. 9.0.2		Id: 5/23

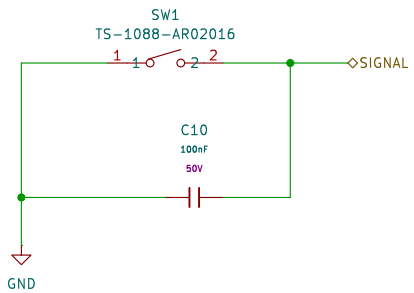

Sheet: /Download Mode Toggle/
File: pd_switch.kicad_sch

Title:

Size: A4	Date:	**Rev:**
KiCad E.D.A. 9.0.2		Id: 6/23

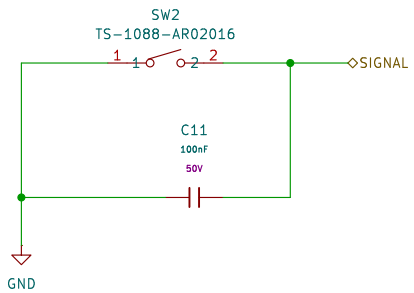

Sheet: /ESP Reset/
File: pd_switch.kicad_sch

Title:

Size: A4	Date:	**Rev:**
KiCad E.D.A. 9.0.2		Id: 7/23

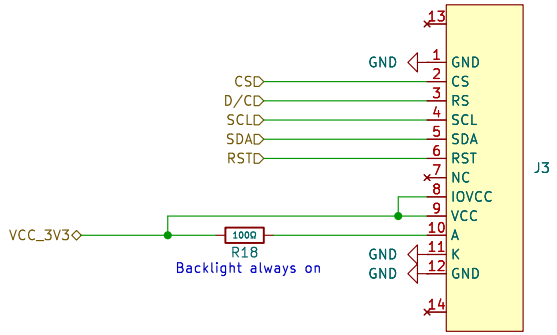

Sheet: /Display/
File: display.kicad_sch

Title:

Size: A4	Date:	Rev:
KiCad E.D.A. 9.0.2		Id: 8/23

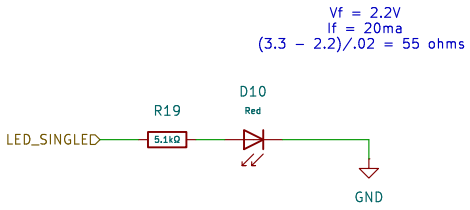

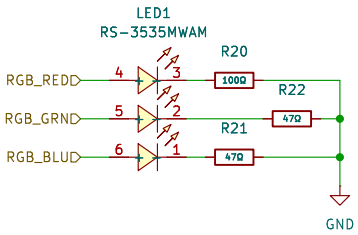

Sheet: /LEDs/
File: leds.kicad_sch

Title:

Size: A4	Date:	**Rev:**
KiCad E.D.A. 9.0.2		Id: 9/23

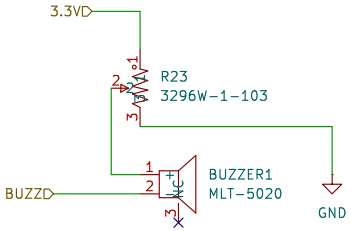

Sheet: /Audio/
File: audio.kicad_sch

Title:

Size: A4	Date:	**Rev:**
KiCad E.D.A. 9.0.2		Id: 10/23

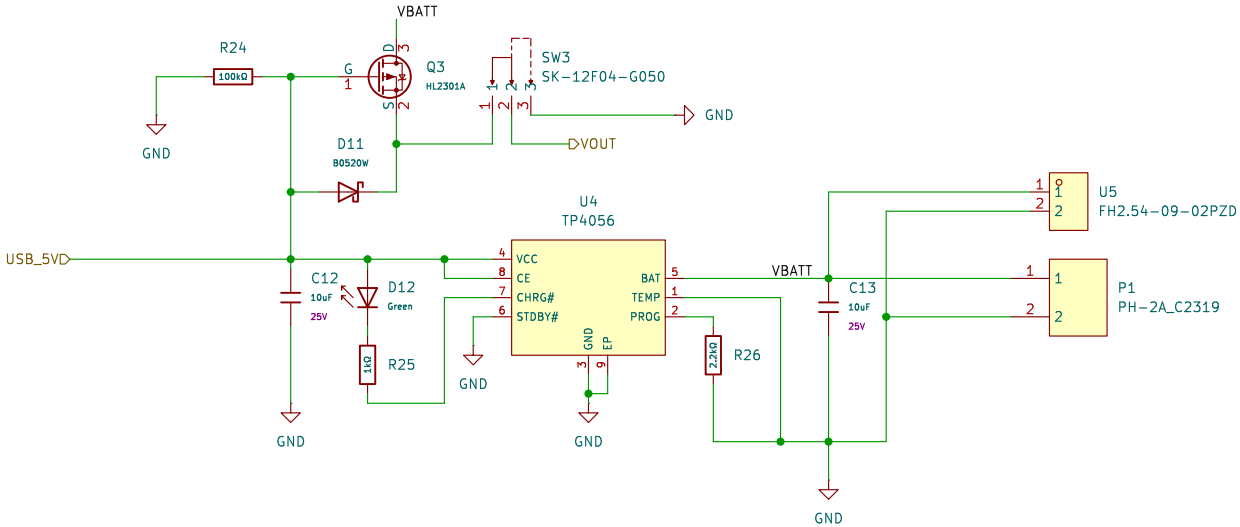

Sheet: /Charging/
File: Charging.kicad_sch

Title:

Size: A4	Date:	**Rev:**
KiCad E.D.A. 9.0.2		Id: 11/23

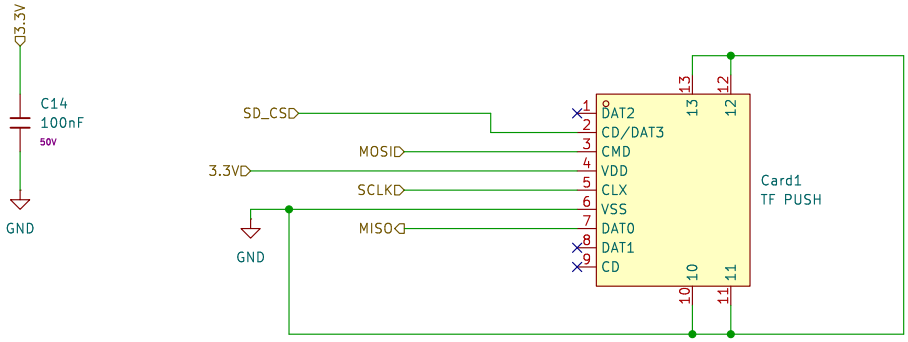

Sheet: /SD Card/
File: sd_card.kicad_sch

Title:

Size: A4	Date:	**Rev:**
KiCad E.D.A. 9.0.2		Id: 12/23

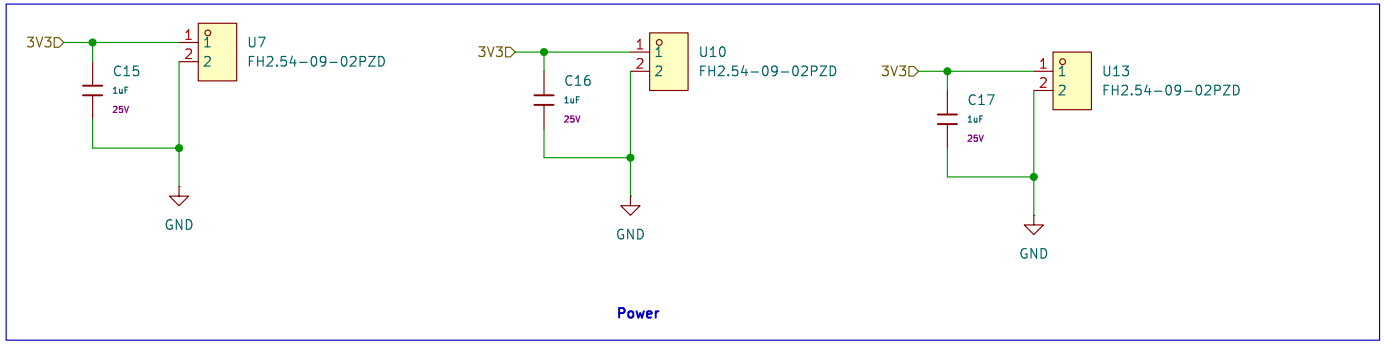

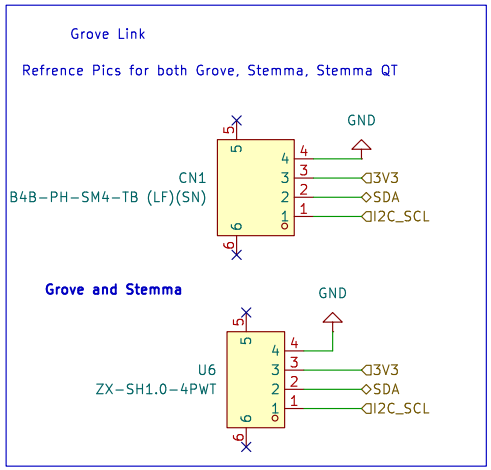

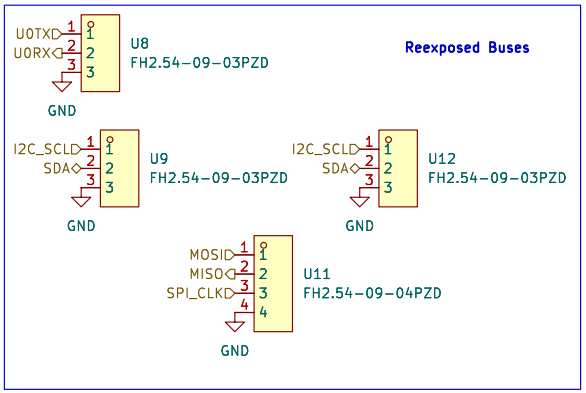

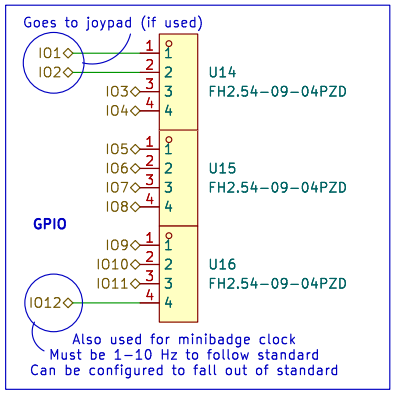

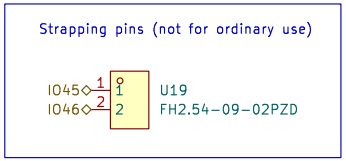

Sheet: /Exposed Pins/
File: exposed_pins.kicad_sch

Title:

Size: A4	Date:	Rev:
KiCad E.D.A. 9.0.2		Id: 13/23

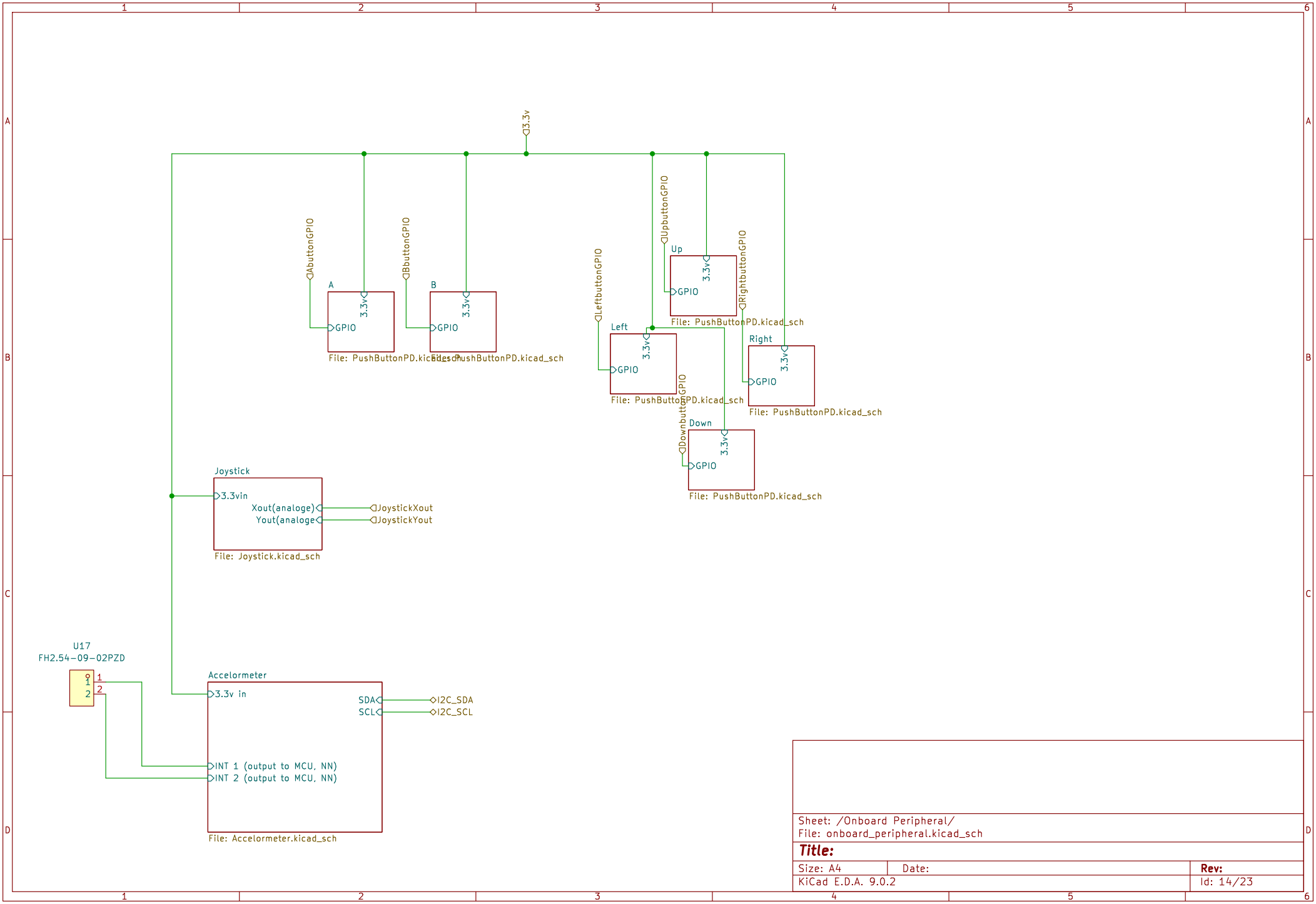

Sheet: /Onboard Peripheral/
File: onboard_peripheral.kicad_sch

Title:

Size: A4	Date:	**Rev:**
KiCad E.D.A. 9.0.2		Id: 14/23

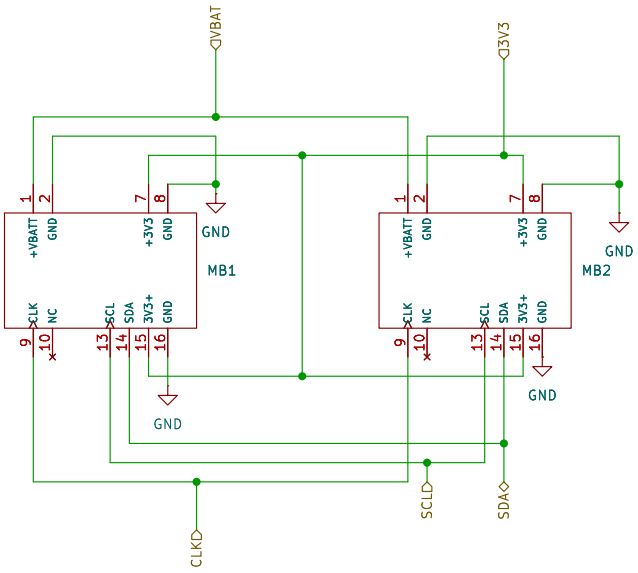

Sheet: /minibadge/
File: minibadge.kicad_sch

Title:

Size: A4	Date:	**Rev:**
KiCad E.D.A. 9.0.2		Id: 25/23

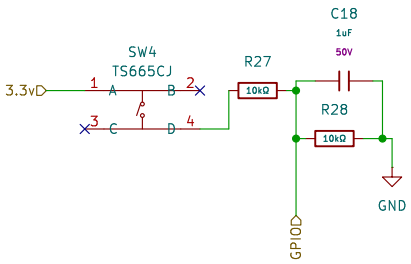

Sheet: /Onboard Peripheral/Right/
File: PushButtonPD.kicad_sch

Title:

Size: A4	Date:	**Rev:**
KiCad E.D.A. 9.0.2		Id: 15/23

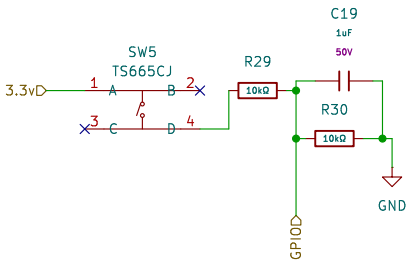

Sheet: /Onboard Peripheral/Up/
File: PushButtonPD.kicad_sch

Title:

Size: A4	Date:	**Rev:**
KiCad E.D.A. 9.0.2		Id: 16/23

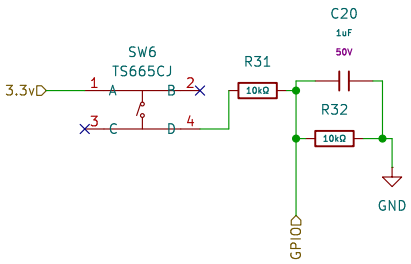

Sheet: /Onboard Peripheral/Left/
File: PushButtonPD.kicad_sch

Title:

Size: A4	Date:	**Rev:**
KiCad E.D.A. 9.0.2		Id: 17/23

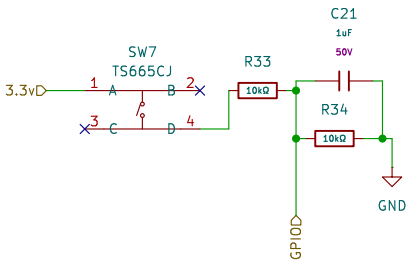

Sheet: /Onboard Peripheral/B/
File: PushButtonPD.kicad_sch

Title:

Size: A4	Date:	**Rev:**
KiCad E.D.A. 9.0.2		Id: 18/23

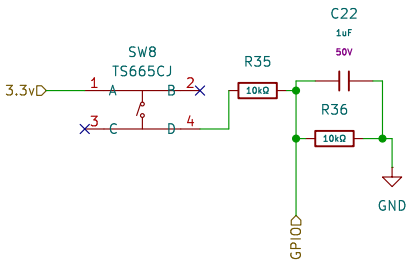

Sheet: /Onboard Peripheral/A/
File: PushButtonPD.kicad_sch

Title:

Size: A4	Date:	**Rev:**
KiCad E.D.A. 9.0.2		Id: 19/23

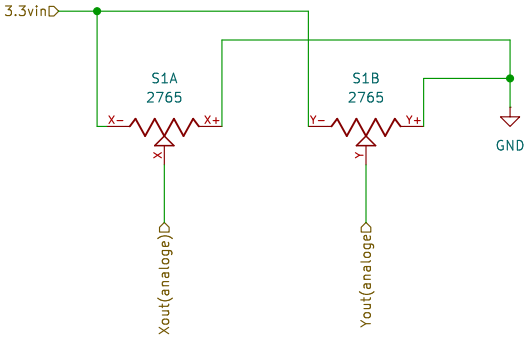

Sheet: /Onboard Peripheral/Joystick/
File: Joystick.kicad_sch

Title:

Size: A4	Date:	**Rev:**
KiCad E.D.A. 9.0.2		Id: 21/23

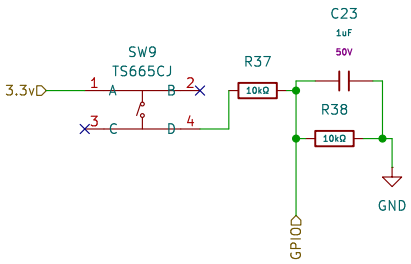

Sheet: /Onboard Peripheral/Down/
File: PushButtonPD.kicad_sch

Title:

Size: A4	Date:	**Rev:**
KiCad E.D.A. 9.0.2		Id: 21/23

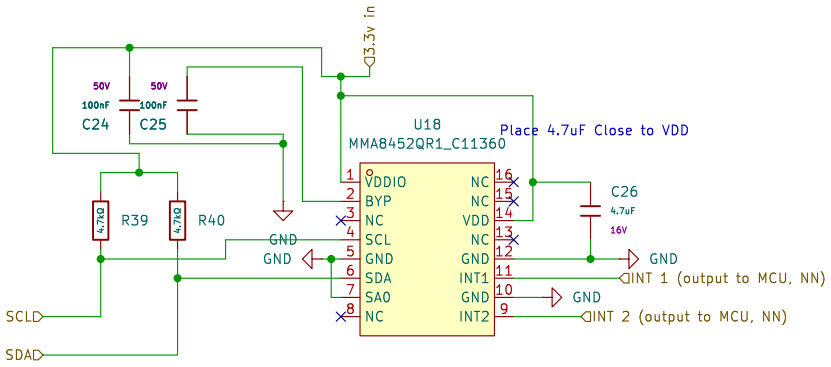

With SA0 Low, 001110 (0x1C) is the address, if high, its (0x1D)

Sheet: /Onboard Peripheral/Accelormeter/
File: Accelormeter.kicad_sch

Title:

Size: A4	Date:	**Rev:**
KiCad E.D.A. 9.0.2		Id: 22/23