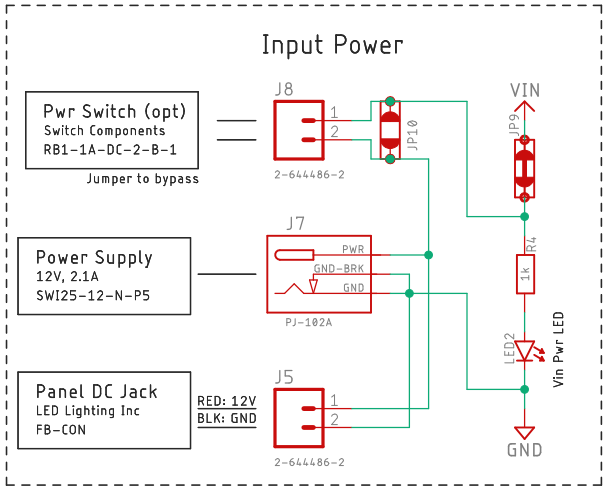

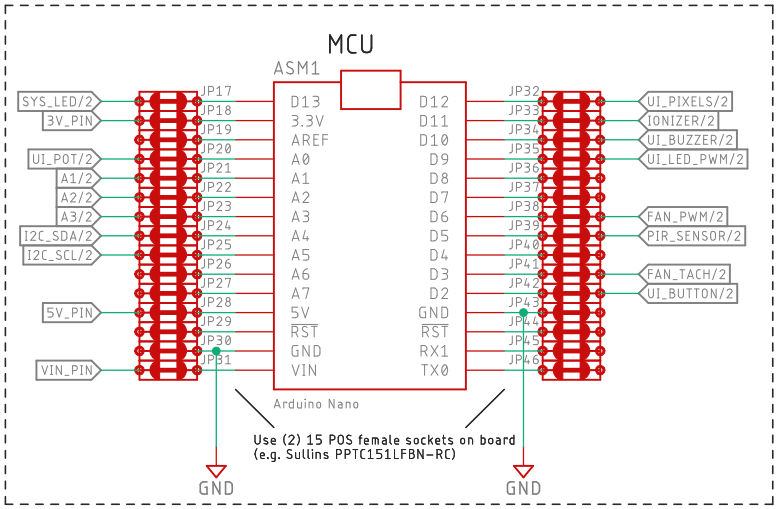

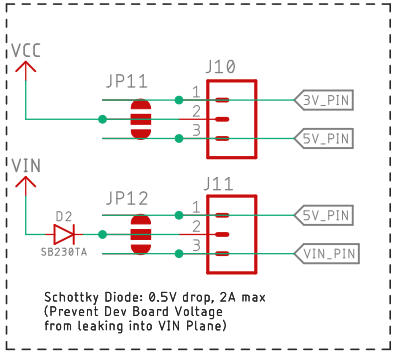

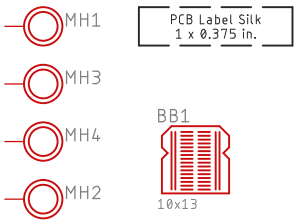

MCU / Power / Mech

FabBoard Foundation PCB	
NFS-ASM-008_FabBoard_Foundation_PCB	
not saved!	Matt Starfield
Sheet: 1/2	Rev: 1.0.0

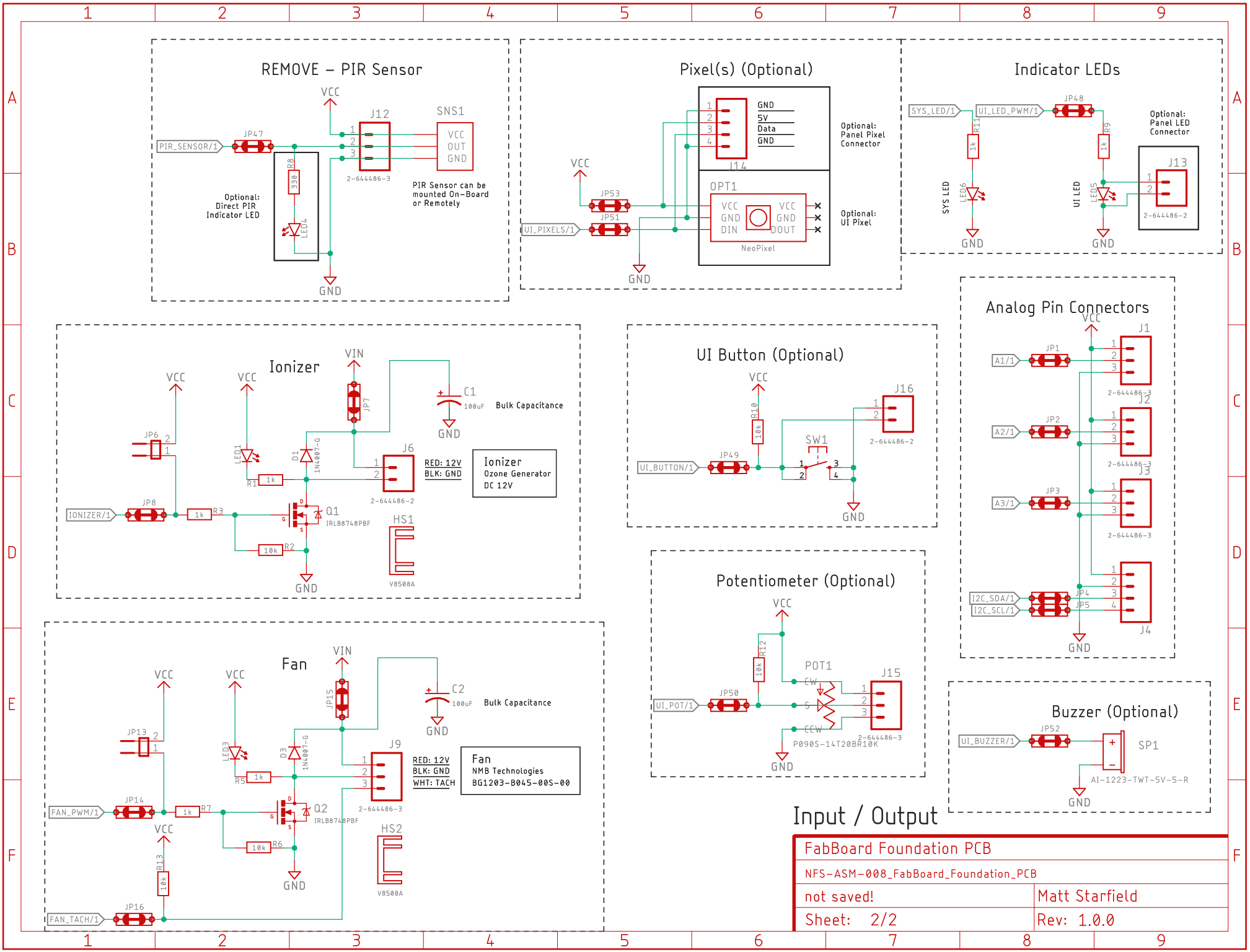

3/1/22 11:56 AM f=1.00 C:\Git_Template_Project\hardware\elec\eagle_v9-6-2\NFS-ASM-008_FabBoard_Foundation_PCB\NFS-ASM-008_FabBoard_Foundation_PCB.