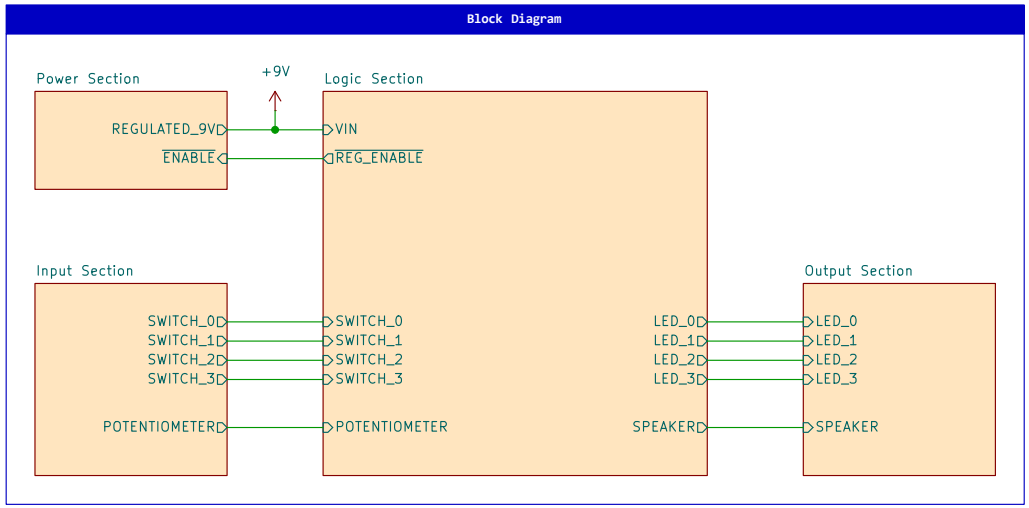

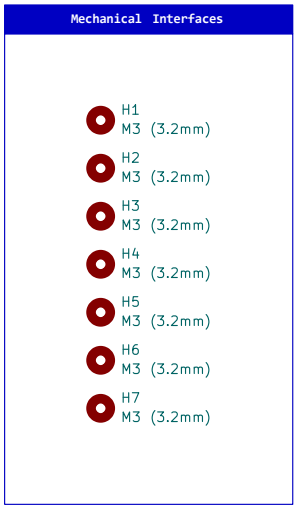

	Simon	Rev.01
		A4
	KiCad E.D.A. 10.0.0	Sheet: 1/5
	Simon.kicad_sch	
	kaffeklubbeneventi@gmail.com	2026-03-31

Simon © 2026 by Matteo Tondelli is licensed under Creative Commons Attribution-NonCommercial-ShareAlike 4.0 International.
To view a copy of this license, visit https://creativecommons.org/licenses/by-nc-sa/4.0/

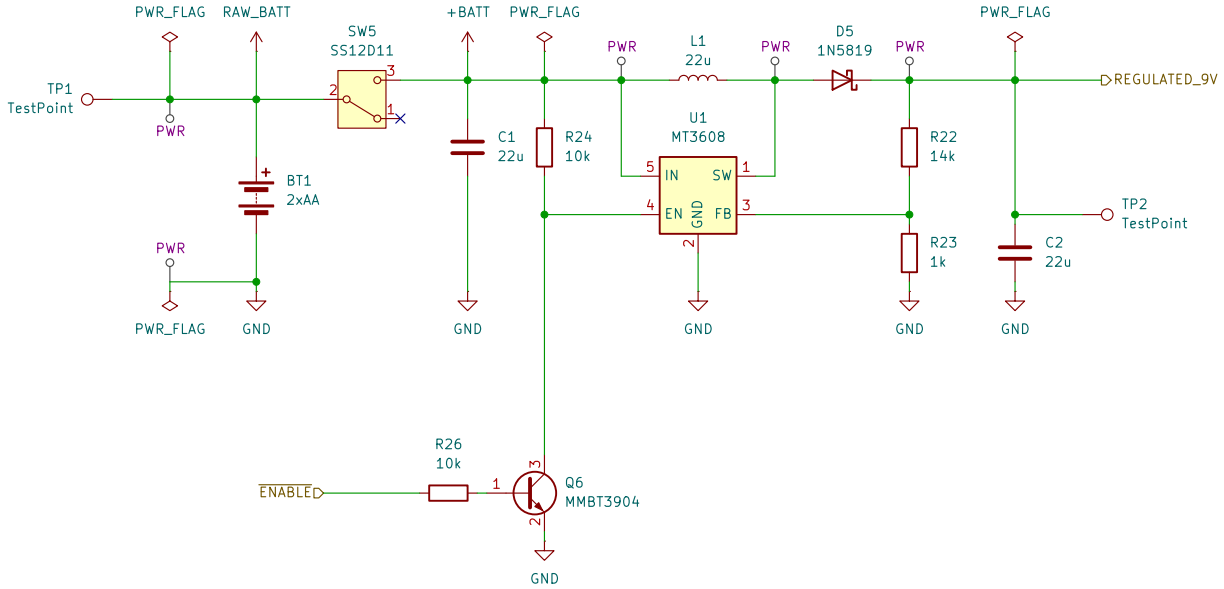

Step-Up Converter Sizing

V_{REF} = 0.6V
V_{REF_min} = 0.588V
V_{REF_max} = 0.612V

$V_{OUT} = V_{REF} * (1 + R22 / R23)$

V_{OUT} = 9V → R22 = 14kΩ

V_{OUT_min} = 8.82V
V_{OUT_max} = 9.18V

	Simon	Rev.01
		A4
	KiCad E.D.A. 10.0.0	Sheet: 2/5
	PowerSection.kicad_sch	
	kaffeklubbeneventi@gmail.com	2026-03-31

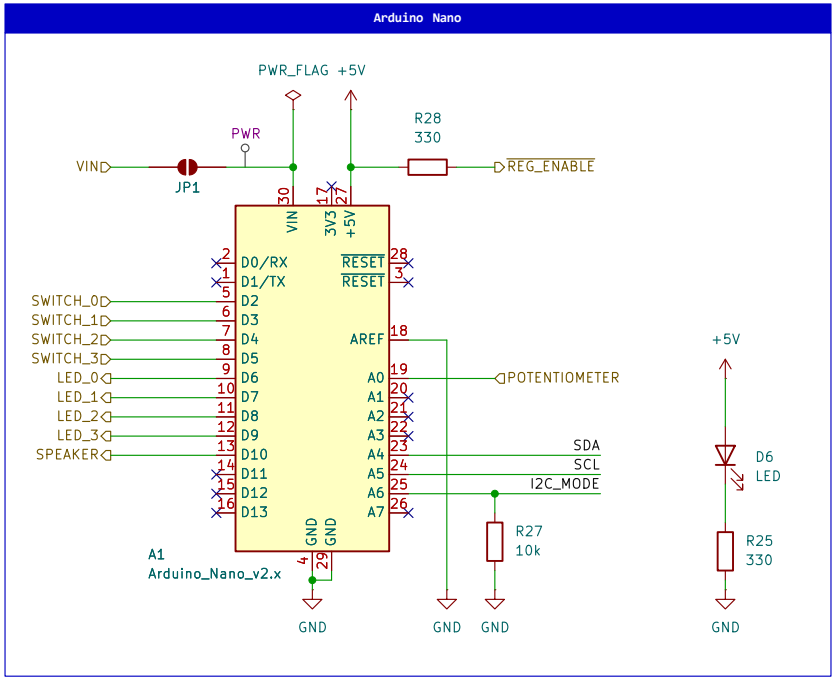

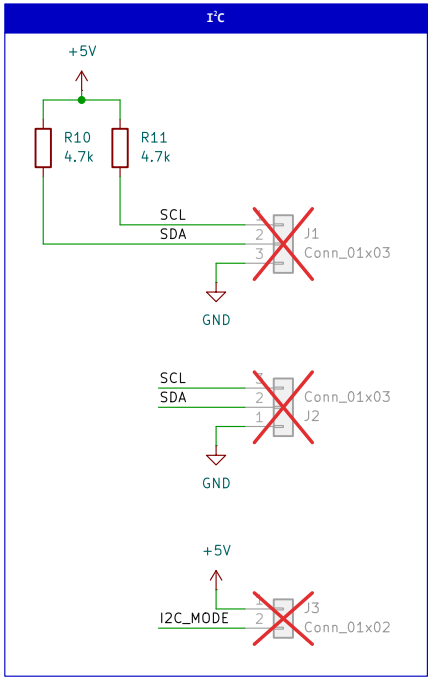

	Simon	Rev.01
		A4
	KiCad E.D.A. 10.0.0	Sheet: 3/5
	LogicSection.kicad_sch	
	kaffeklubbeneventi@gmail.com	2026-03-31

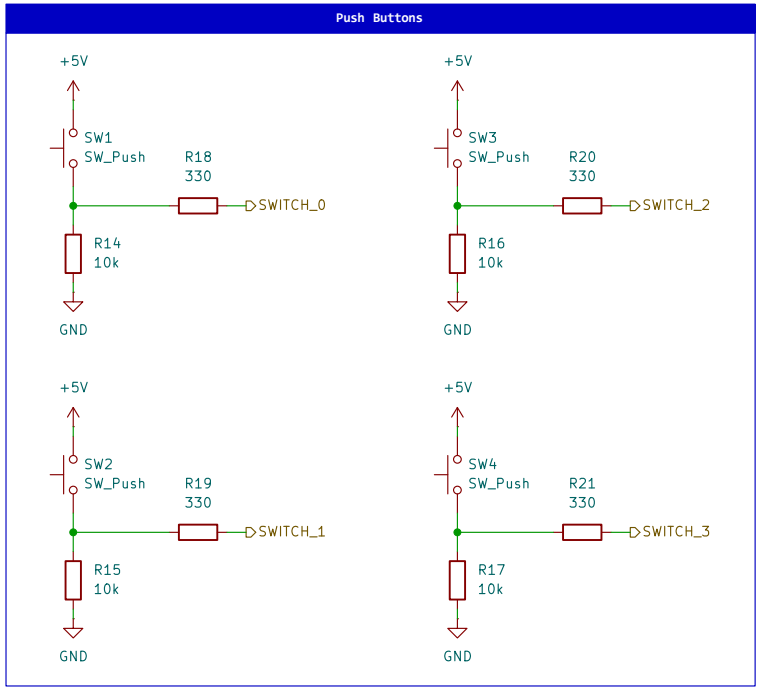

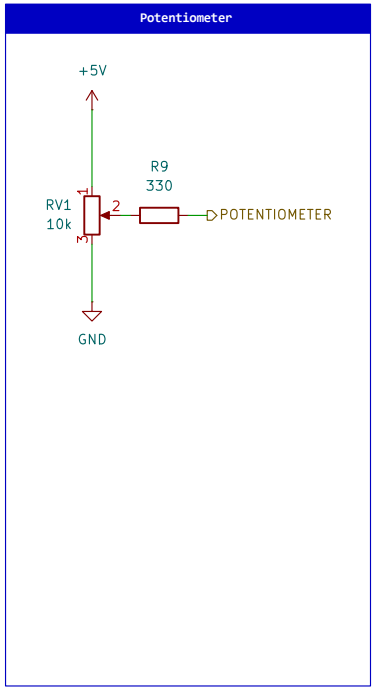

	Simon	Rev.01
		A4
	KiCad E.D.A. 10.0.0	Sheet: 4/5
	InputSection.kicad_sch	
	kaffeklubbeneventi@gmail.com	2026-03-31

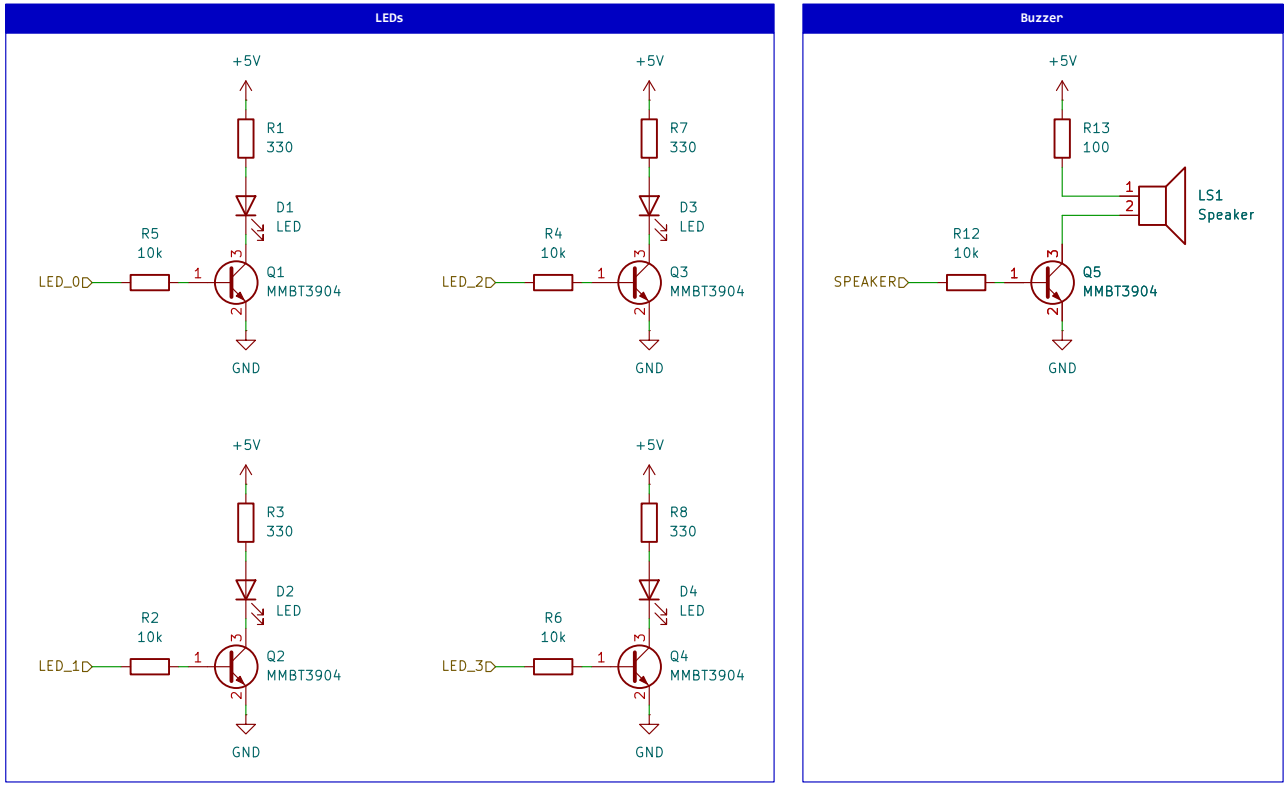

	Simon	Rev.01
		A4
	KiCad E.D.A. 10.0.0	Sheet: 5/5
	OutputSection.kicad_sch	
	kaffeklubbeneventi@gmail.com	2026-03-31