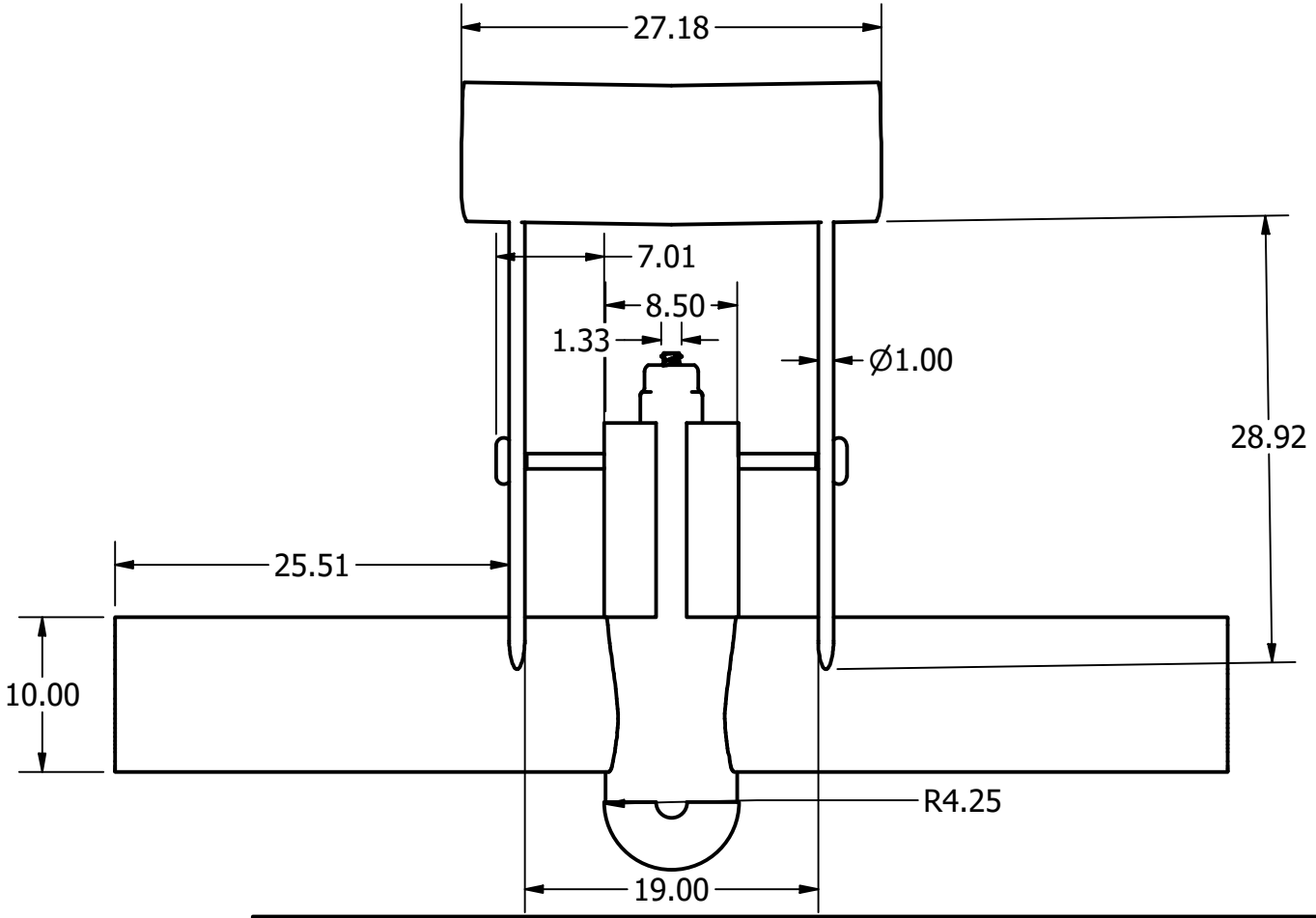

Top View
SCALE 1/6

DRAWN Matthew Burnett	9/18/2024	
CHECKED CJ Goforth	9/18/2024	Top View
QA		
MFG		
APPROVED		

SIZE		DWG NO	REV
A4		DroneV01	0
SCALE 1/12			SHEET 5 OF 5