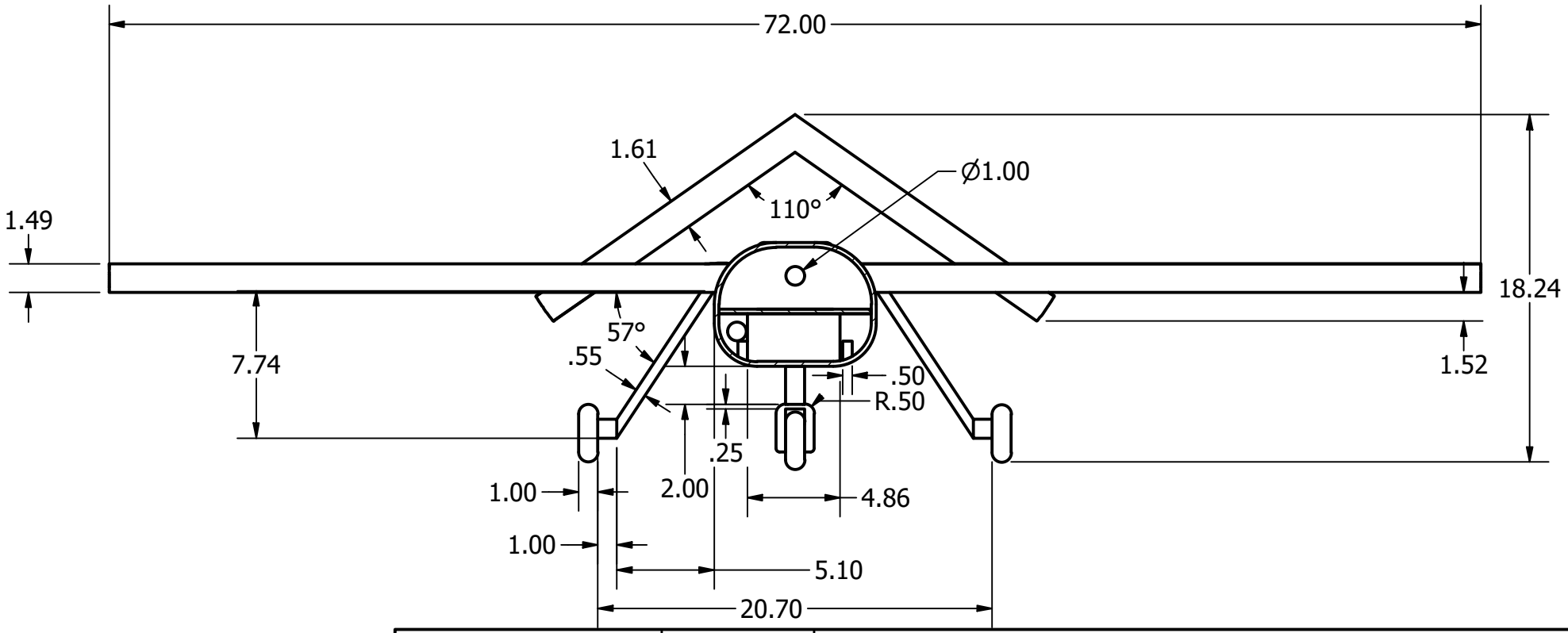

Front View
SCALE 1/8

DRAWN Matthew Burnett	9/18/2024	
CHECKED CJ Goforth	9/18/2024	Front View
QA		
MFG		
APPROVED		
		SIZE A4 / DWG NO DroneV01 / REV 0
		SCALE 1/8 / SHEET 2 OF 5