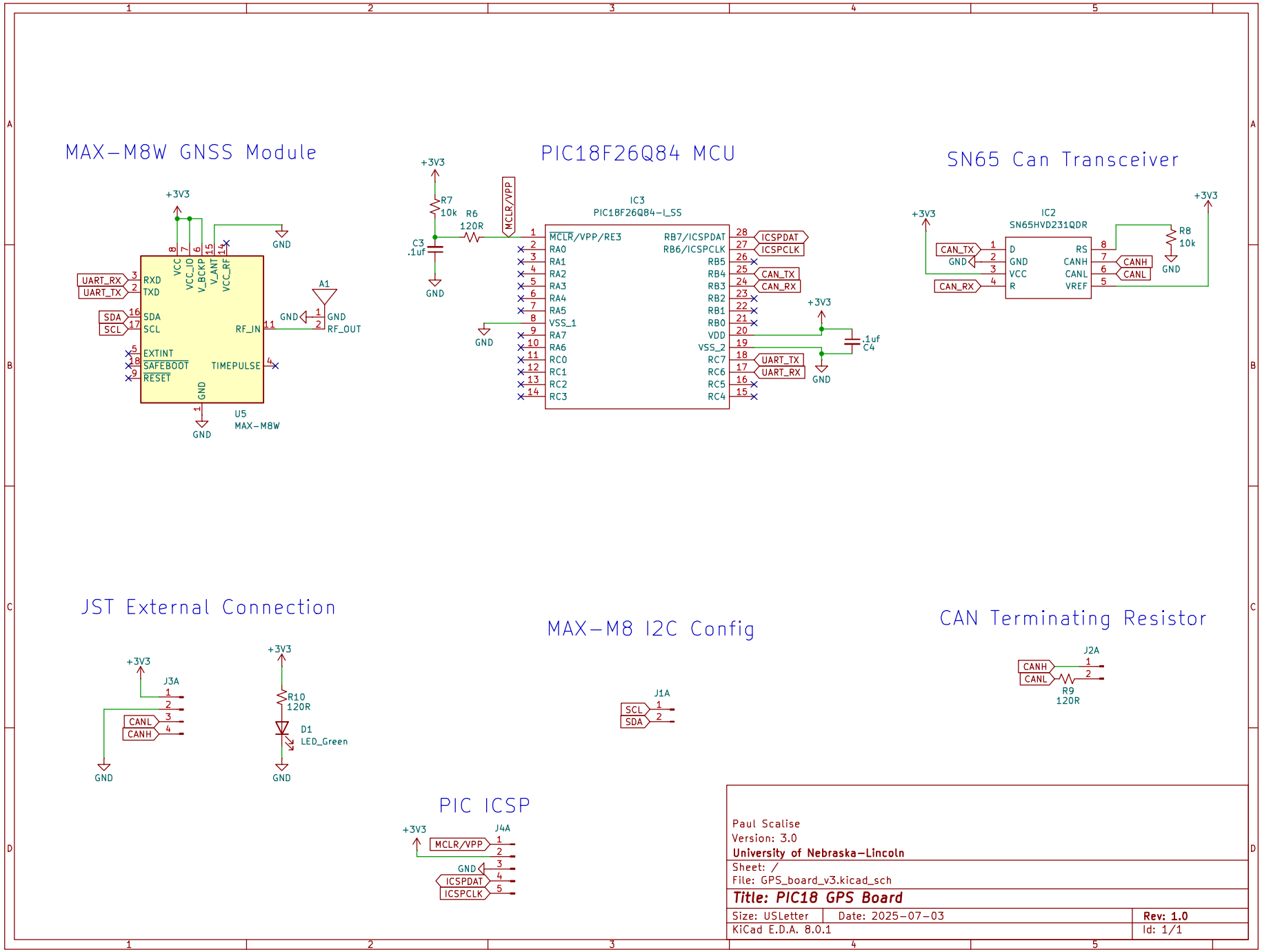
MAX-M8W GNSS Module
+3V3
GND
VCC
VCC_IO
V_BCKP
V_ANT
VCC_RF
UART_RX
UART_TX
RXD
TXD
SDA
SCL
EXTINT
SAFEBOOT
RESET
RF_IN
TIMEPULSE
A1
RF_OUT
U5
MAX-M8W
PIC18F26Q84 MCU
R7
10k
R6
120R
MCLR/VPP
C3
.1uf
IC3
PIC18F26Q84-I_SS
MCLR/VPP/RE3
RA0
RA1
RA2
RA3
RA4
RA5
VSS_1
RA7
RA6
RC0
RC1
RC2
RC3
RB7/ICSPDAT
RB6/ICSPCLK
RB5
RB4
RB3
RB2
RB1
RB0
VDD
VSS_2
RC7
RC6
RC5
RC4
ICSPDAT
ICSPCLK
CAN_TX
CAN_RX
UART_TX
UART_RX
.1uf
C4
SN65 Can Transceiver
IC2
SN65HVD231QDR
D
GND
VCC
R
RS
CANH
CANL
VREF
R8
10k
JST External Connection
J3A
CANL
CANH
R10
120R
D1
LED_Green
MAX-M8 I2C Config
J1A
SCL
SDA
CAN Terminating Resistor
J2A
R9
120R
PIC ICSP
J4A
MCLR/VPP
GND
ICSPDAT
ICSPCLK
Paul Scalise
Version: 3.0
University of Nebraska-Lincoln
Sheet: /
File: GPS_board_v3.kicad_sch
Title: PIC18 GPS Board
Size: USLetter
Date: 2025-07-03
Rev: 1.0
KiCad E.D.A. 8.0.1
Id: 1/1