LAKE LIFTER: 100 Industrial Drive, Avilla IN 46710 | Ph: 260-918-2758 | www.lakelifter.com | www.lakelite.com | Email: sales@lakelifter.com

WINCH SHAFT – THREAD SIZING GUIDE

Nearly all winch boxes utilize a handful of common thread sizes for their shaft. If you are unsure about which install kit you have we recommend you print off this page and fold the paper to hold up next to your winch box shaft to determine the appropriate thread.

1. Before printing, remove all scaling or fit to paper options from print menu.
2. Measure the printed tape measure to verify scale
3. Cut or fold paper on dotted line
4. Measure the diameter of the thread using the red box
5. Measure the thread by lining up the illustration with your winch box

Note: ACME threads will appear to be flat while UNC threads will be peaked

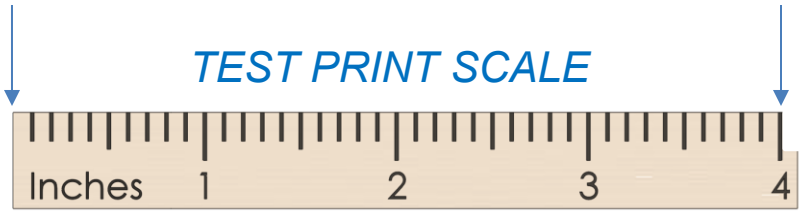

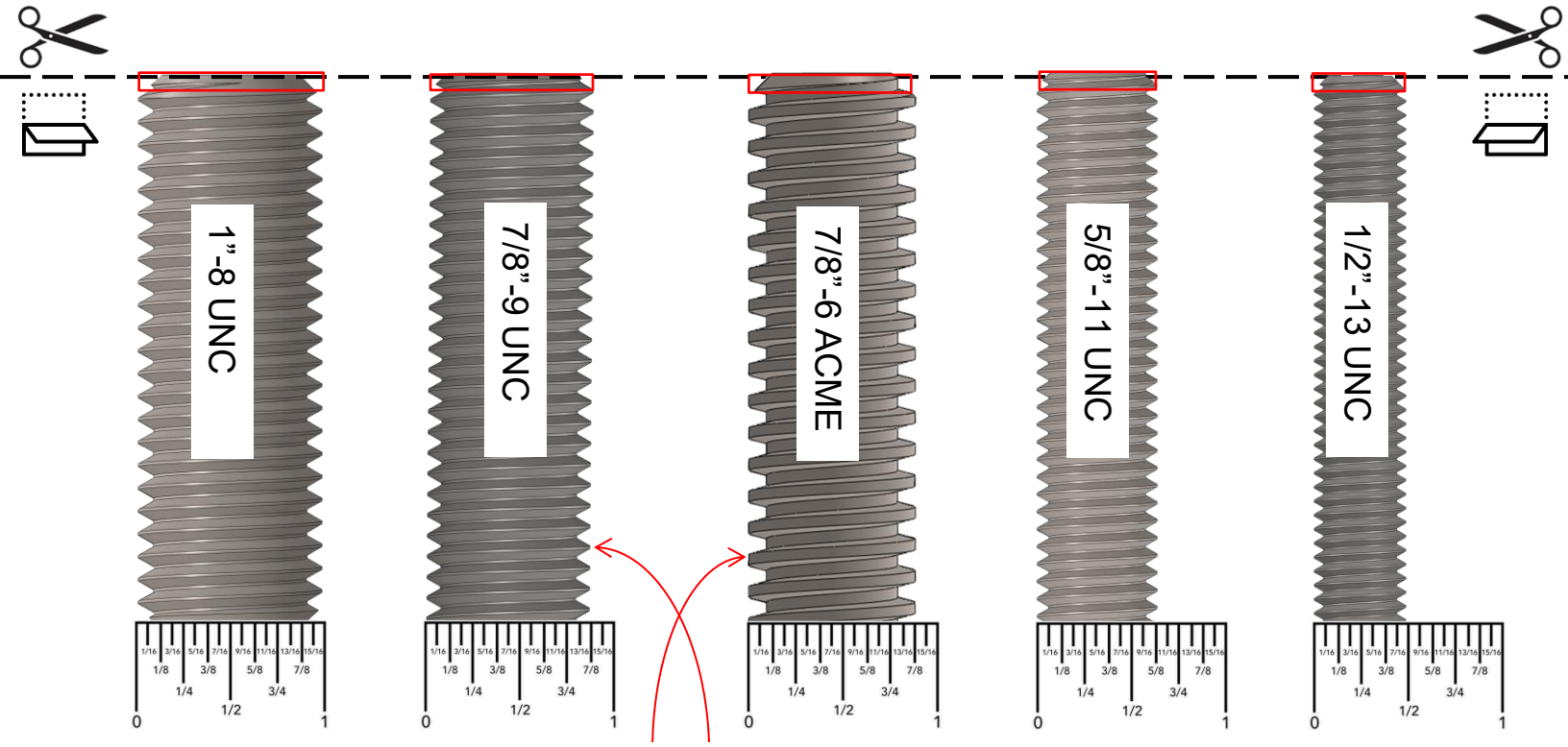

Note: ACME threads will appear to be flat while UNC threads will be peaked

For questions, concerns regarding installation kits, please contact us or send photos to sales@lakelifter.com

INSTALL KIT QUICK REFERENCE

LAKE LIFTER

LAKE LIFTER: 100 Industrial Drive, Avilla IN 46710 | Ph: 260-918-2758 | www.lakelifter.com | www.lakelite.com | Email: sales@lakelifter.com

LF-WK-MC 133-0111	7/8”-9 UNC	MOST BRANDS | LORENZ SYTLE WINCHBOX |EXTREME MAX 3.5K/4K/5K/7K WINCH BOXES |RGC ≤ 3.5K | AQUAMATIC | BEACH KING | CUSTOM PORTABLE | DAKA | DOCK RITE | FEIGHNER | GREAT LAKES | LAKESIDE | METAL CRAFT | MIDLANDER - OLD| NEWMAN | NORTHERN LIGHTS | PIER PLEASURE | RATI-O-MATIC | RIDGELINE | STARR | JB LUND 2017+ | LAKESHORE - NEW BLACK SPOOL | MAX DOCK -LORENZ STYLE| SHOREMASTER - OLD SM WINCH | SHORE-MATE - OLD LORENZ WINCH | VIBO - ENCLOSED ALUMINUM WINCH |W.O.W | HIGH & DRY LAKESHORE - VERY OLD - BLUE DRUM
LF-WK-SS-SM 133-0121	SHAFT	SHORESTATION: 2.6k | 3K |3.6k | 4k | 4.5k - WINCH COVER BASE 4 - 1/2"
LF-WK-SS-LG 133-0120	SHAFT	SHORESTATION: 5k | 6k - WINCH COVER BASE 5" ATLAS BOAT LIFTS
LF-WK-DL-A 133-0104	5/8”-11 UNC	DUTTON LAINSON MODELS: 1200A | 1500A | 2500A SHELBY MODELS: 5532 | 5401 | 5331 SHORESTATION PWC 1062
LF-WK-DL-B 133-0105	7/8”-9 UNC	DUTTON LAINSON MODELS: B1200 | B1500 | B2500 | B3500 BERTRAND DOCKS (2000/3000/3400) - 2019 & OLDER EASTERN TOWNSHIP/QUAIS (OPEN SPOOL 2000/3000/3400) FLOE SHOREMASTER & SHOREMATE - OLDEST OPEN SPOOL WINCH
LF-WK-CD 133-0102	7/8”-9 UNC	DUTTON LAINSON: CD3500 | CD4000 | CD4500 | CD5500 | CD7000 BERTRAND DOCKS - 2019 & OLDER (4500/5500) EASTERN TOWNSHIP/QUAIS (4500/5500) JB LUND (OLD - PRE 2017) MAX DOCK - DL CD4000/4500/5500/6000/7000
LF-WK-CD-B 133-0103	7/8”-6 ACME	BERTRAND 2019 OR NEWER W/ DIFFERENT ADAPTOR *DUTTON LAINSON: CD3500 | CD4000 | CD4500| CD5500 | CD7000 *BERTRAND DOCKS - 2019 & NEWER (4500/5500) *EASTERN TOWNSHIP/QUAIS (4500/5500)
LF-WK-HM 133-0108	7-8"-6 ACME	HARBOR MASTER
LF-WK-HM-SHAFT 133-0109	SHAFT	HARBOR MASTER REPLACEMENT SHAFT
LF-WK-NU 133-0112	1"-8 UNC	NUCRAFT CRAFTLANDER
LF-WK-NU-SHAFT 133-0113	SHAFT	NUCRAFT REPLACEMENT SHAFT
LF-WK-PD 133-0114	7-8"-6 ACME	PORTA DOCK | SHOREMATE-NEW | SUMMIT-NEW |MIDLANDER-NEW |TRIMET WINCHBOX
LF-WK-PD-SHAFT 133-0115	SHAFT	PORTA DOCK | SHOREMATE-NEW | SUMMIT-NEW | MIDLANDER-NEW | TRIMET REPLACEMENT SHAFT
LF-WK-HW 133-0110	7/8”-9 UNC	HEWITT
LF-WK-FUL 133-0107	½”-13 UNC	FULTON
LF-WK-RGC 133-0116	7/8”-6 ACME	RGC | RGC LVG - R18LT/R18HD - (4K & LARGER)
LF-WK-SLV 133-0118	7/8”-9 UNC	SHORELINE VERTICAL: 3009SL | 4010SL
LF-WK-SM 133-0119	7/8”-9 UNC	NEW SHOREMASTER WHISPER WINCHES: 141 | 241 | 2.0
LF-WK-SU 133-0122	7/8”-6 ACME	SUMMIT - OLD LAKESHORE - VERY OLD - RED DRUM INSIDE SPOOL

LAKE LIFTER: 100 Industrial Drive, Avilla IN 46710 | Ph: 260-918-2758 | www.lakelifter.com | www.lakelite.com | Email: sales@lakelifter.com

Lorenz Style Winch Box

- **(Most Common)**

Shaft Thread	Install Kit	Part #
7/8”-9 UNC	LF-WK-MC	133-0111

- **MOST BRANDS**
- **LORENZ STYLE**
- RGC (3k & Smaller)
- AQUAMATIC
- BEACHKING
- CUSTOM PORTABLE
- DAKA
- DOCK RITE
- FEIGHNER
- GREAT LAKES
- LAKESIDE
- METAL CRAFT
- MIDLANDER
- NEWMAN
- NORTHERN LIGHTS
- EXTREME MAX WINCHES 3.5k | 4k | 5k | 7k
- PIER PLEASURE
- RATIO-O-MATIC
- RIDGELINE
- STARR
- JB LUND 2017+
- MAX DOCKS – OLDER
- SHOREMASTER – OLD
- SHOREMATE – OLD LORENZ VIBO – ENCLOSED WINCH BOX
- W.O.W.
- HIGH & DRY
- LAKESHORE (LSP) – **NEWER BLACK SPOOL DRUM**
- LAKESHORE (LSP) – VERY OLD, BLUE SPOOL DRUM

Lorenz Style Winch Box

- **Summit Lifts – (OLD)**

Shaft Thread	Install Kit	Part #
7/8”-6 ACME	LF-WK-SU	133-0122

NOTE: : Older Summit boat lifts feature a Lorenz Style winchbox however their shaft thread is 7/8”-6 ACME thread instead.

WINCH REFERENCE GUIDE

LAKE LIFTER

LAKE LIFTER: 100 Industrial Drive, Avilla IN 46710 | Ph: 260-918-2758 | www.lakelifter.com | www.lakelite.com | Email: sales@lakelifter.com

Lake Shore Products (LSP)

*** VERY OLD! Check Drum!**

DRUM COLOR	Shaft Thread	Install Kit	Part #
RED DRUM * VERY OLD	7/8”-6 ACME	LF-WK-SU	133-0122
BLUE DRUM	7/8”-9 UNC	LF-WK-MC	133-0111
BLACK DRUM	7/8”-9 UNC	LF-WK-MC	133-0111

NOTE: VERY OLD Lake Shore Product “LSP” cantilever pontoon lifts may feature a RED SPOOL DRUM. Note if your unit features a RED SPOOL drum you must purchase this RED DRUM KIT.

Very OLD Lake Shore Products “LSP” cantilever pontoon lifts with a BLUE spool drum or Newer “LSP” lifts with a BL

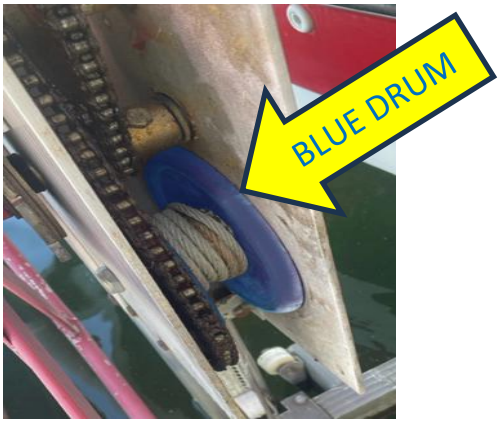

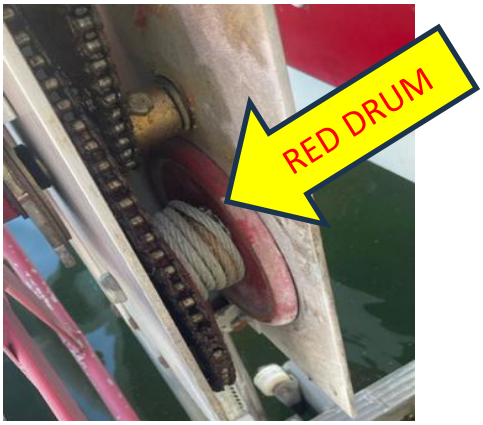

HEWITT Winch Box

Shaft Thread	Install Kit	Part #
7/8”-9 UNC	LF-WK-HW	133-0110

COMMON WINCH MODELS (May Vary)

- HEWITT 1501 | 2001 | 2501

For questions, concerns regarding installation kits, please contact us or send photos to sales@lakelifter.com

WINCH REFERENCE GUIDE

LAKE LIFTER

LAKE LIFTER: 100 Industrial Drive, Avilla IN 46710 | Ph: 260-918-2758 | www.lakelifter.com | www.lakelite.com | Email: sales@lakelifter.com

TriMet Industries Winch Box

- Porta Dock – (All)
- Shore Mate – (Newer)
- MidLander – (Newer)
- Summit – (Newer) ⚠

Shaft Thread	Install Kit	Part #	TYPE
★ ALL BRANDS – BEST KIT!	LF-WK-PD-SHAFT	133-0115	Shaft Replacement
7/8”-6 ACME	LF-WK-PD	133-0114	Adapter
7/8”-9 UNC	LF-WK-SUN	133-01XX	Adapter

OPTIONS: We have TWO style install kits. Our Adapter style simply screws onto the existing winch shaft. Occasionally there is a slight wobble affect due to thread tolerances and old winch shafts. This is normal and cause no harm to the motor or winch. Our shaft-replacement kit replaces the winch shaft and eliminates any wobble affect however it does require a few extra minutes of install time.

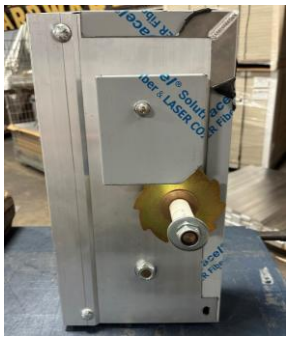

NuCraft
Craftlander
Lakeside Lift Corp – (Older)

Shaft Thread	Install Kit	Part #	TYPE
1”-8 UNC	LF-WK-NU	133-0112	Adapter
1”-8 UNC	LF-WK-NU-SHAFT	133-0113	Shaft Replacement

OPTIONS: There are two distinct styles of NuCraft/Craftlander installation kits. Firstly, we offer our standard "ADAPTER" style kit, which simply screws directly onto your winch box shaft. Occasionally, due to minor thread inconsistencies, a slight motor "wobble" effect may occur, but rest assured, it poses NO harm to the motor or winch box. Alternatively, we offer the "SHAFT REPLACEMENT" style kit, which requires an additional 5-10 minutes of installation work. The SHAFT REPLACEMENT option completely eliminates any motor wobble for ultimate performance.

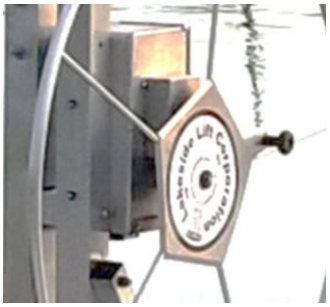

For questions, concerns regarding installation kits, please contact us or send photos to sales@lakelifter.com

LAKE LIFTER: 100 Industrial Drive, Avilla IN 46710 | Ph: 260-918-2758 | www.lakelifter.com | www.lakelite.com | Email: sales@lakelifter.com

Dutton Lainson B Winches

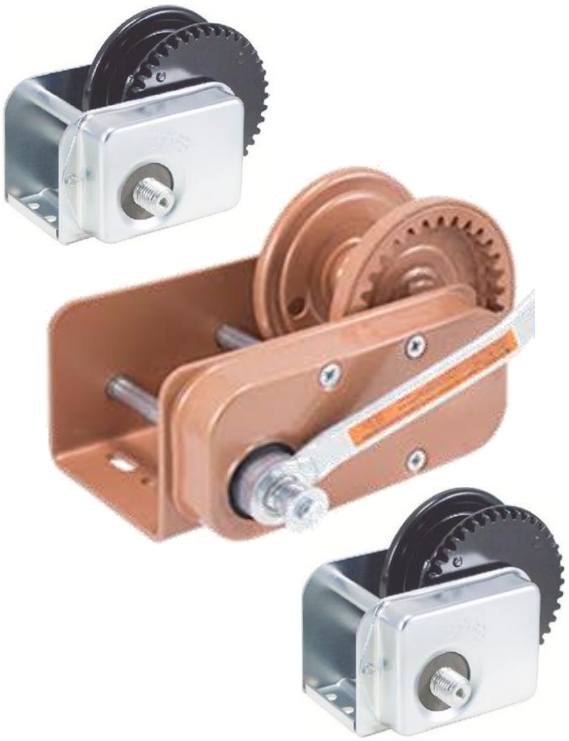

Shaft Thread	Install Kit	Part #
7/8”-9 UNC	LF-WK-DL-B	133-0105

DUTTON LAINSON B COMMON WINCH MODELS (May Vary)

- B1200 | B1500 | B2500 | B3500

IMPORTANT: Check the model number stamped on the side of the winch. Ensure that the model number has a “B” at the beginning or the END. The “B” stands for Brake winch. NOTE the “A” model requires a different kit.

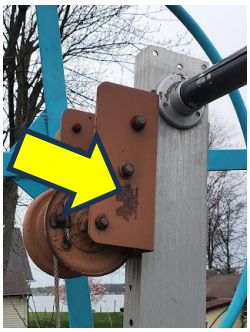

Dutton Lainson A Winches

Shelby Winches

Shaft Thread	Install Kit	Part #
5/8”-11	LF-WK-DL-A	133-0104

DUTTON LAINSON A COMMON WINCH MODELS (May Vary)

- 1200A | 1500A | 2500A

SHELBY COMMON WINCH MODELS (May Vary)

- 5352 | 5401 | 5404 | 5331

IMPORTANT: Check the model number stamped on the side of the winch. Ensure that the model number has an “A” at the beginning or the END. NOTE the “B” model requires a different kit.

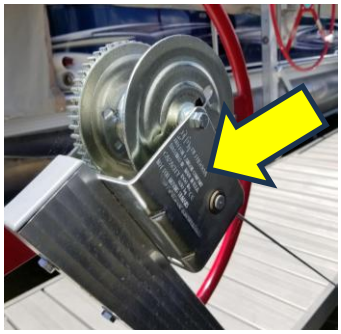

WINCH REFERENCE GUIDE

LAKE LIFTER

LAKE LIFTER: 100 Industrial Drive, Avilla IN 46710 | Ph: 260-918-2758 | www.lakelifter.com | www.lakelite.com | Email: sales@lakelifter.com

FULTON Winches

Shaft Thread	Install Kit	Part #
½”-13 UNC	LF-WK-FUL	133-0107

FULTON COMMON WINCH MODELS (May Vary)

- 5352 | 5401 | 5404 | 5331

IMPORTANT: Fulton winches have a VERY SMALL ½”-13 threaded shaft. The ½” diameter shaft is very small and weak when driven by a powerful direct drive motor. These shafts have been known to sometimes break at higher loads. If your Fulton Series winch breaks, then we recommend replacing it with a similar style Dutton Lainson A or B style winch.

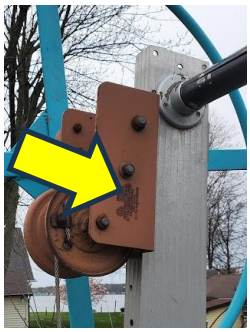

Harbor Master Winch
FENDOCK Winch

Shaft Thread	Install Kit	Part #	TYPE
7/8”-6 ACME	LF-WK-HM	133-0108	Adapter
7/8”-6 ACME	LF-WK-HM-SHAFT	133-0109	Shaft Replacement

OPTIONS: There are two distinct styles of Harbor Master installation kits. Firstly, we offer our standard "ADAPTER" style kit, which simply screws directly onto your winch box shaft. Occasionally, due to minor thread inconsistencies, a slight motor "wobble" effect may occur, but rest assured, it poses NO harm to the motor or winch box. Alternatively, we offer the "SHAFT REPLACEMENT" style kit, which requires an additional 5 minutes of installation work. The SHAFT REPLACEMENT option eliminates any motor wobble for ultimate performance.

For questions, concerns regarding installation kits, please contact us or send photos to sales@lakelifter.com

WINCH REFERENCE GUIDE

LAKE LIFTER

LAKE LIFTER: 100 Industrial Drive, Avilla IN 46710 | Ph: 260-918-2758 | www.lakelifter.com | www.lakelite.com | Email: sales@lakelifter.com

Dutton Lainson
*Chain Drive Winches

Shaft Thread	Install Kit	Part #	Typically
7/8”-9 UNC	LF-WK-CD	133-0102	USA + CA
7/8”-6 ACME	LF-WK-CD-B	133-0103	CANADA

COMMON WINCH MODELS (May Vary)

- CD3500 | CD4000 | CD4500 | CD5500 | CD6000 | CD7000

USA - Brand Boat Lifts have 7/8”-9 UNC thread Shaft

CANADA - Eastern Township Docks / Quais Betrand boat lifts:

- **2019** & newer typically have a 7/8”-6 ACME thread shaft.
- **2018** & older typically have a 7/8”-9 UNC thread shaft

CANADA customers please check thread before ordering.

ALL USA BRANDS + OLDER CANADA BRANDS

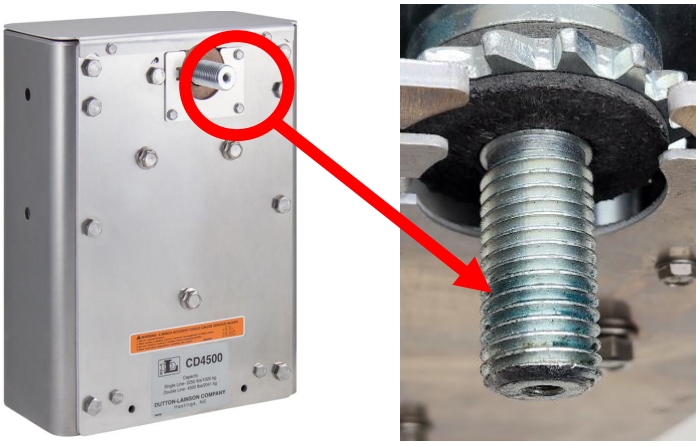

7/8”
Thread Width

7/8”-9 UNC

1”

9-Threads / Inch

NOTE: sharp thread crest

9-threads per linear inch

CANADA / 2019 & NEWER PLEASE CHECK

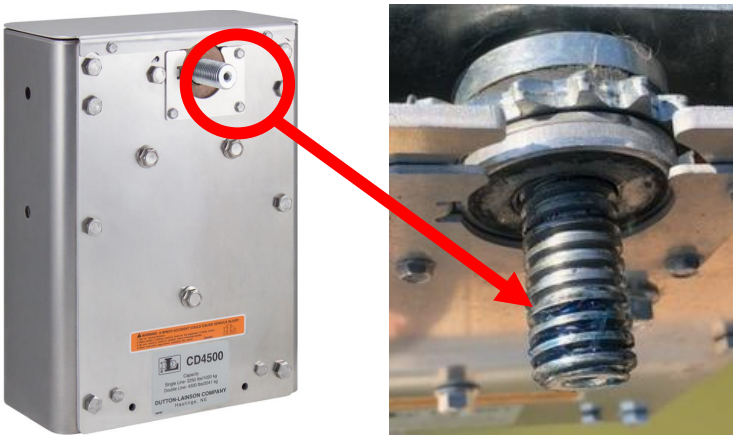

7/8”
Thread Width

7/8”-6 ACME

1”

6-Threads / Inch

NOTE: FLAT thread crest

6-threads per linear inch

For questions, concerns regarding installation kits, please contact us or send photos to sales@lakelifter.com

WINCH REFERENCE GUIDE

LAKE LIFTER

LAKE LIFTER: 100 Industrial Drive, Avilla IN 46710 | Ph: 260-918-2758 | www.lakelifter.com | www.lakelite.com | Email: sales@lakelifter.com

Shore Station Winches

Atlas Winches

Shaft Thread	Install Kit	Part #	TYPE
Not Applicable	LF-WK-SS-SM	133-0121	Shaft Replacement
Not Applicable	LF-WK-SS-LG	133-0120	Shaft Replacement

COMMON WINCH & LIFT MODELS (May Vary) - SMALL SIZE

- 2000 | 2600 | 3000 | 3600 | 4000 | 4500

⚠ IMPORTANT: Small models feature a single chain & Low gear ratio. We recommend pairing with our High Torque motor

COMMON WINCH MODELS (May Vary) - LARGE SIZE

- 5000 | 6000 | 7000

ShoreStation SMALL

2.6k | 3k | 3.6k | 4k | 4.5k

(Winch Cover Base of 4-1/2")

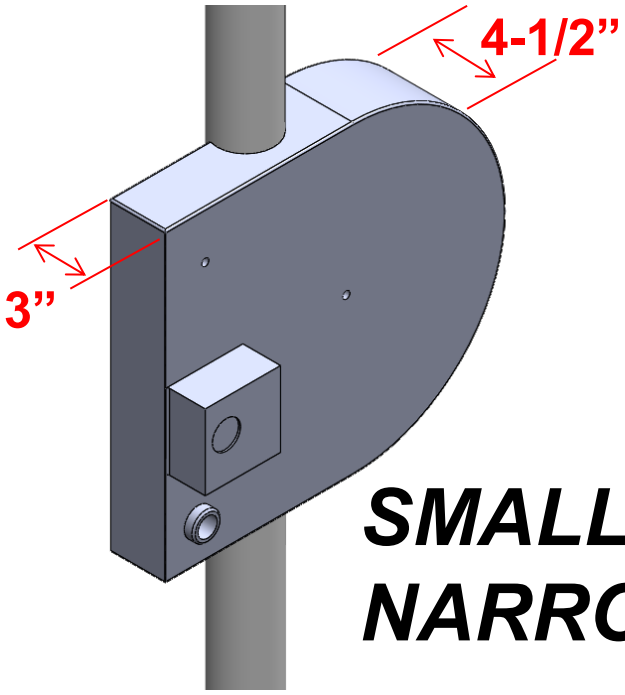

SMALL NARROW

The rear side of the winch is thinner than the front side of the winch.

OR

ShoreStation LARGE: 5k | 6k

ATLAS Boat Lifts: 5K

(Winch Cover Base of 5")

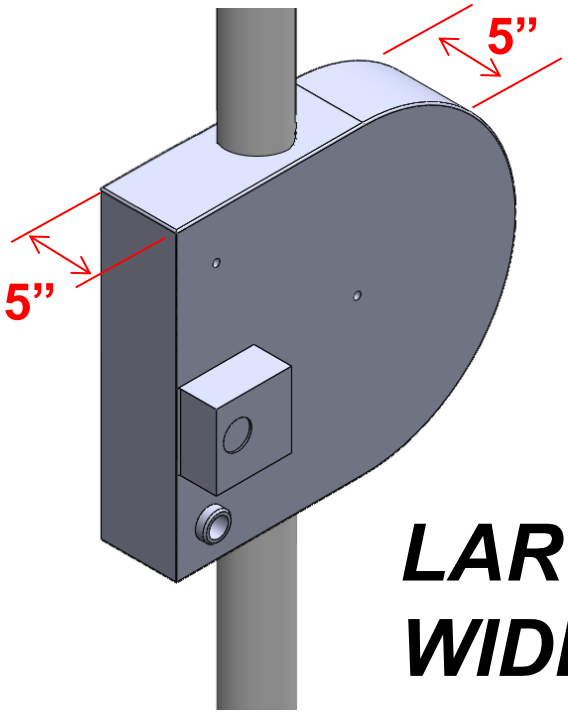

LARGE WIDE

The rear side of the winch is the SAME width as the front side of the winch.

For questions, concerns regarding installation kits, please contact us or send photos to sales@lakelifter.com

LAKE LIFTER: 100 Industrial Drive, Avilla IN 46710 | Ph: 260-918-2758 | www.lakelifter.com | www.lakelite.com | Email: sales@lakelifter.com

Shore Stations w/ Single Chain

SINGLE CHAIN MODELS - SMALL SIZE Style Winch Boxes

- Lifts size (lbs) 2000 | 2600 | 3000 | 3600
- Lift Models: 20108 | 26108 | 30108 | 30120 | 36108 | 36120 |

2000-3600 lbs Single Chain Lifts Notice:

These lifts pose a challenge due to their low gear ratio, making cranking difficult. Wheel to wheel style friction motors may fail or burn out easily. Our Direct drive motors can handle them, be cautious as the 3,600 lbs winch is sometimes sold as a 4,000 lbs lift or equipped with a 3,600 lbs winch box on a 4,000 lbs lift, making lifting extremely difficult. In such cases, using our AC 120v motor may trip your 15A house breaker, or the DC 12/24v motors may blow the 80A fuse breaker.

For Single chain ShoreStation winches, we recommend our High Torque (HT) model motors with increased gear ratio to reduce amp draw, enhance torque output, and extend the life span of the Lake Lifter motor, minimizing the risk of tripping fuse breakers. Our standard direct drive motors have a 40:1 gearbox, while High Torque Direct drive motors feature a 60:1 gearbox. Although the HT 60:1 has a slower output speed, the net result is similar or faster than the 40:1 on these lifts, as the 60:1 HT model is less bogged down.

Shore Station (Single Chain)

2600 lbs | 3000 lbs | 3600 lbs

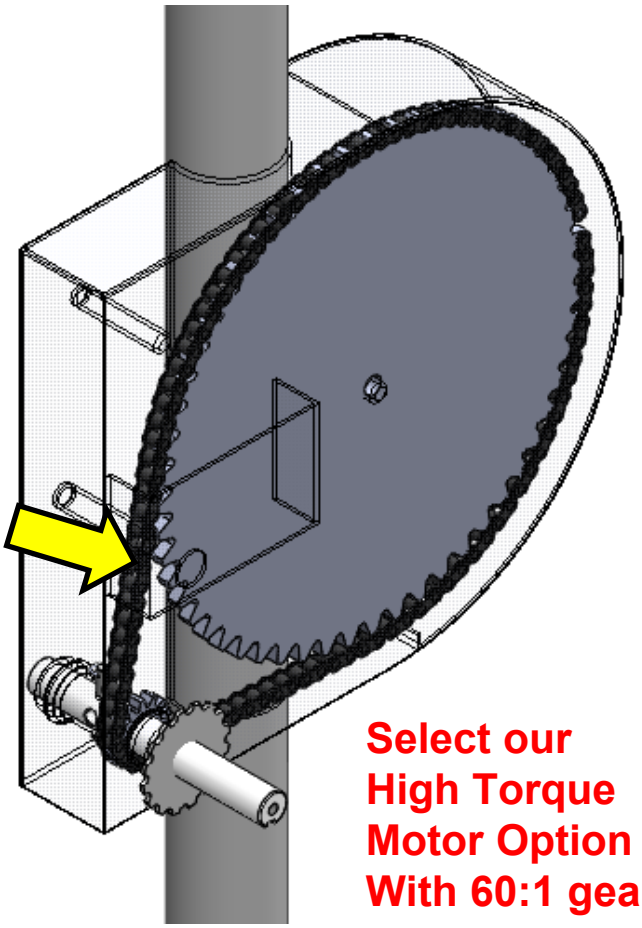

Select our High Torque Motor Option With 60:1 gear

Shore Station (Dual Chain)

4000 lbs | 4500 lbs | 5000 lbs | 6000 lbs

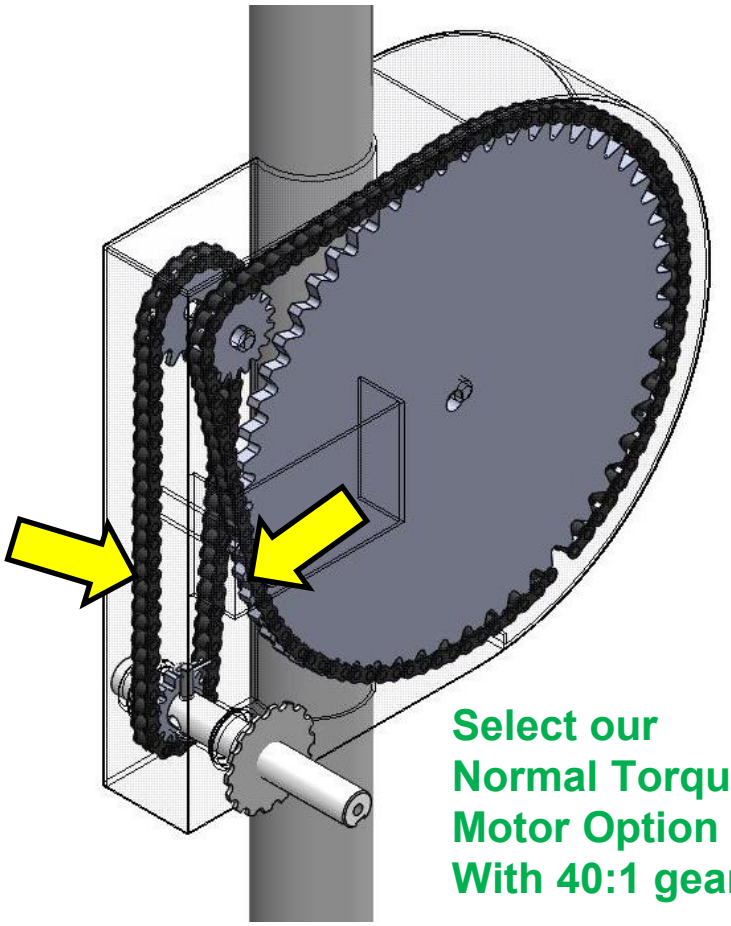

Select our Normal Torque Motor Option With 40:1 gear

WINCH REFERENCE GUIDE

LAKE LIFTER

LAKE LIFTER: 100 Industrial Drive, Avilla IN 46710 | Ph: 260-918-2758 | www.lakelifter.com | www.lakelite.com | Email: sales@lakelifter.com

Shore Master

- **Whisper Winch**
- **Whisper Winch 2.0**

Shaft Thread	Install Kit	Part #
7/8”-9 UNC	LF-WK-SM	133--0119

COMMON WINCH MODELS (May Vary)

- Whisper Winch 141
- Whisper Winch 241
- Whisper Winch 2.0

Shore Master (*OLD)

Shaft Thread	Install Kit	Part #
7/8”-9 UNC	LF-WK-MC	133-0111

NOTE: Older ShoreMasters typically 2010 and older are nearly identical to the LORENZ / MOST COMMON style winch box however they feature cable rollers near the bottom of the winch. These model winches use the SAME install kit as the Lorenz / Most Common winch

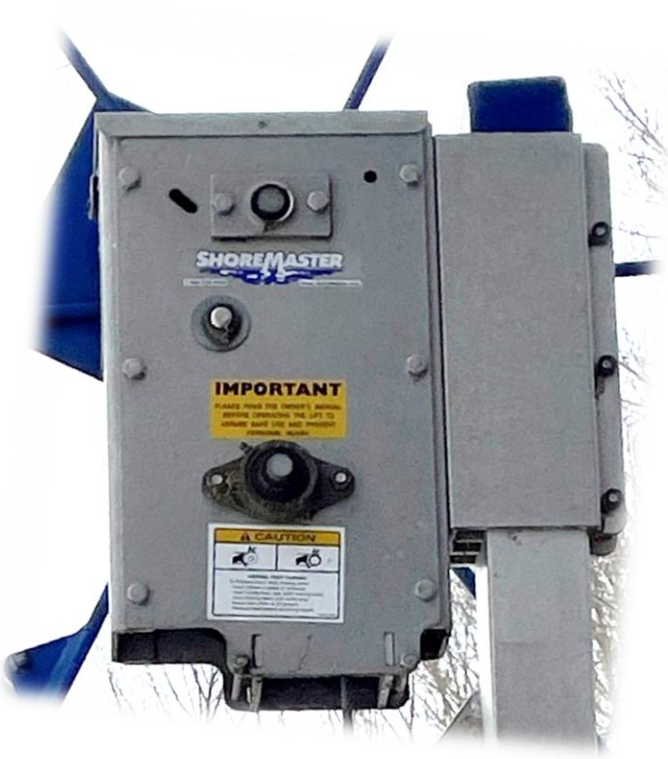

For questions, concerns regarding installation kits, please contact us or send photos to sales@lakelifter.com

LAKE LIFTER: 100 Industrial Drive, Avilla IN 46710 | Ph: 260-918-2758 | www.lakelifter.com | www.lakelite.com | Email: sales@lakelifter.com

RGC – (Smaller Lifts) (Lorenz Winch Box)

Shaft Thread	Install Kit	Part #
7/8”-9 UNC	LF-WK-MC	133-0111

NOTE: Smaller sized RGC lifts, typically less than 4500 lbs in capacity use a Lorenz winch box. Please check your winch box!

RGC - (Larger Lifts)

Shaft Thread	Install Kit	Part #
7/8”-6 ACME	LF-WK-RGC	7/8-6”ACME

COMMON WINCH MODELS (May Vary)

- RL18

NOTE: Larger sized RGC lifts, typically 5000 lbs and higher use a RGC brand winch box as shown below. Please check your winch box!

LAKE LIFTER: 100 Industrial Drive, Avilla IN 46710 | Ph: 260-918-2758 | www.lakelifter.com | www.lakelite.com | Email: sales@lakelifter.com

HEWITT – (Hefty Hoist)
*PLEASE CALL

PLEASE CALL: Hewitt Hefty Hoist utilize a belt & pulley style winch referred to as a "Flat Plate / Gear Plate / Belt & Pulley Plate, etc".

Lake Lifter offers a different style DC motor system for this type of lift. There are several options to consider when converting this style winch to DC-Solar or replacing this style winch. We recommend you contact one of our experts to discuss the various options.