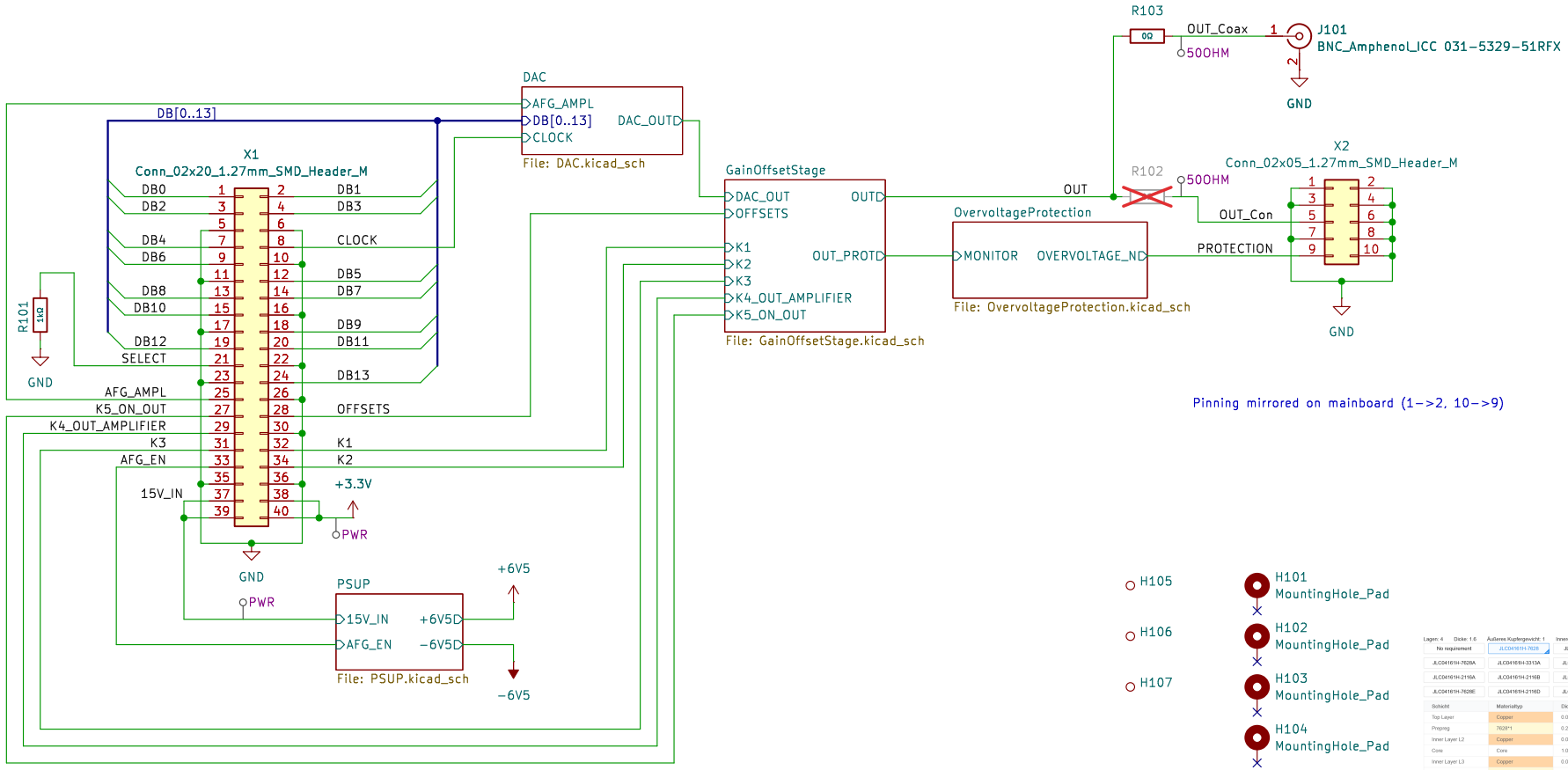

Lagen: 4	Dicke: 1.6	Äußeres Kupfergewicht: 1	Inneres Kupfergewicht: 0.5
No requirement		JLC04161H-7628	JLC04161H-3313
JLC04161H-7628A		JLC04161H-3313A	JLC04161H-1080A
JLC04161H-2116A		JLC04161H-2116B	JLC04161H-2116C
JLC04161H-7628E		JLC04161H-2116D	JLC04161H-7628D

Schicht	Materialtyp	Dicke
Top Layer	Copper	0.035mm
Prepreg	7628*1	0.21040mm
Inner Layer L2	Copper	0.0152mm
Core	Core	1.065mm
Inner Layer L3	Copper	0.0152mm
Prepreg	7628*1	0.21040mm
Bottom Layer	Copper	0.035mm

History

File: History.kicad_sch

M. Zimmermann

Sheet: /

File: AWG.kicad_sch

Title: AWG for DHO8/900

Size: A4	Date: 2026-04-14	**Rev: V3**
KiCad E.D.A. 9.0.1		Id: 1/6

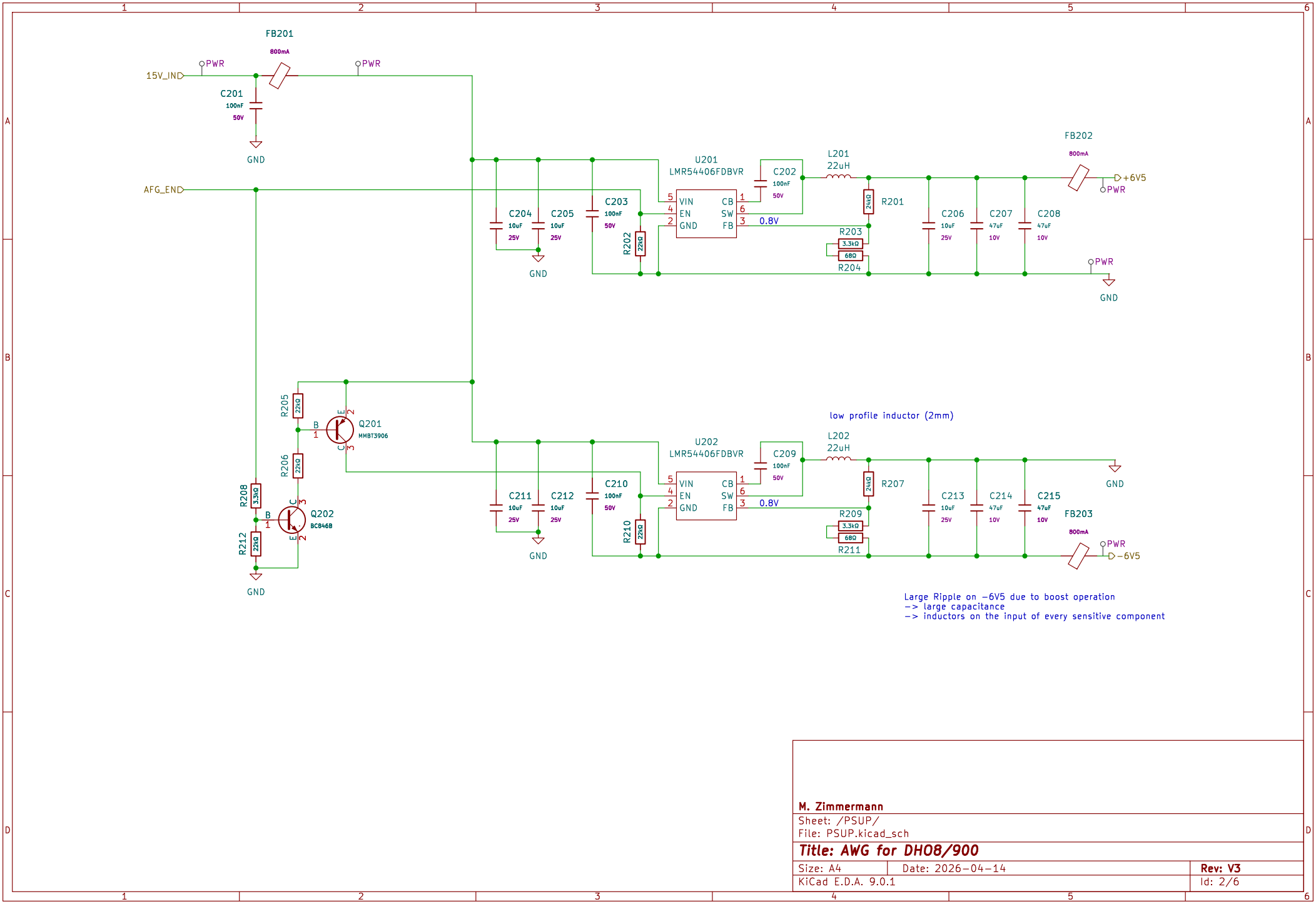

M. Zimmermann

Sheet: /PSUP/
File: PSUP.kicad_sch

Title: AWG for DHO8/900

Size: A4	Date: 2026-04-14	**Rev: V3**
KiCad E.D.A. 9.0.1		Id: 2/6

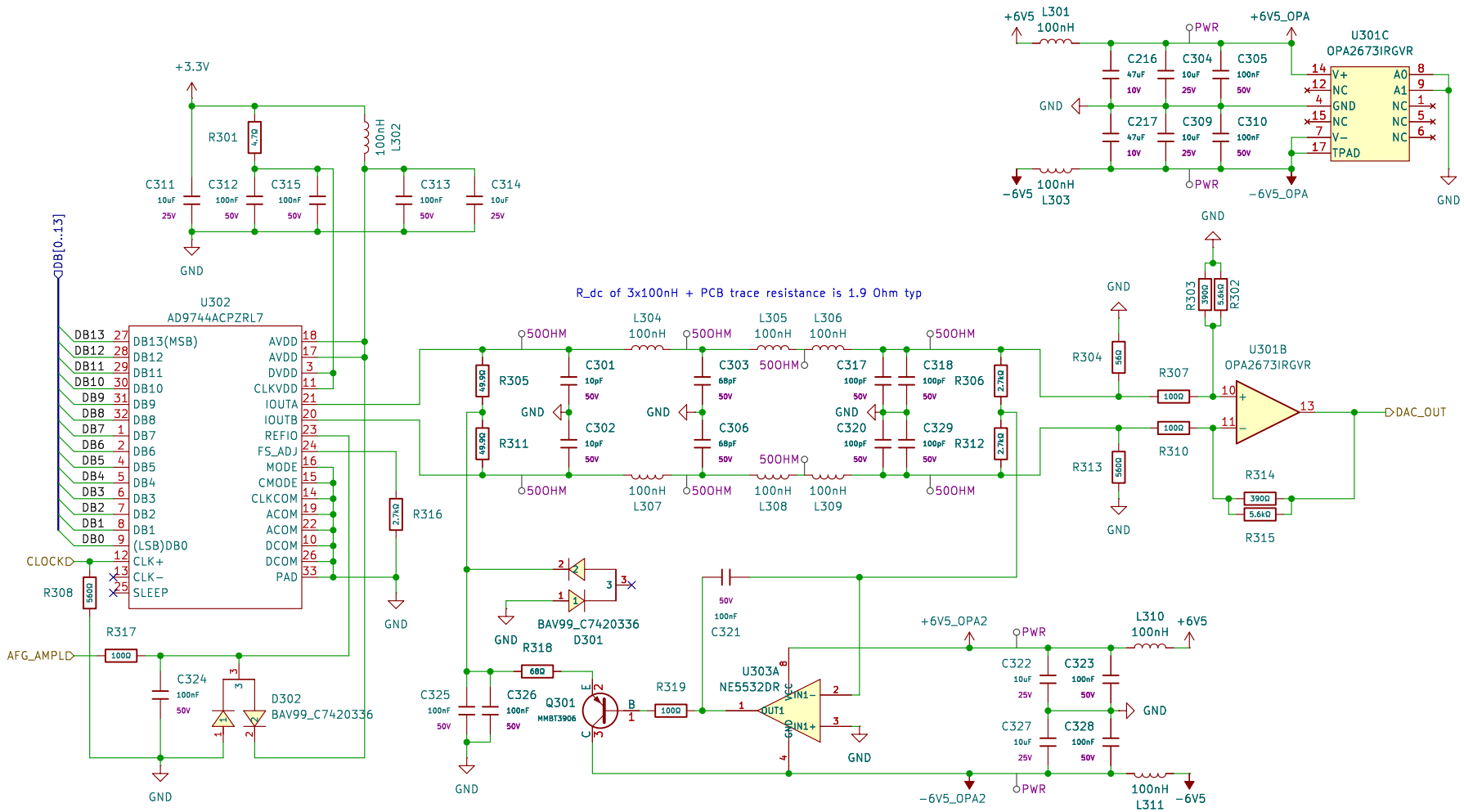

With K1−4 disabled:

AFG_AMPL = 0.860 * target peak−to−peak amplitude
I_dac_FS = IoutA+IoutB = 32 x AFG_AMPL / R_FS_ADJ
V_dac_diff_FS = ± 25.21 Ohm x I_dac_FS
Volt_Div_Rdc_Inductors(1.9Ohm) = 0.963
Gain OPA2673 = 3.65
Gain AWG_OUT/OPA2673_OUT = 0.5556

at maximum target Amplitude 2Vpp (at 2.01Vpp a relay is switched on):
AFG_AMPL = 1.719V
I_dac_FS = 20.37mA
V_dac_diff_FS = ± 513.5 mV min/max
V_in_OPA2673 = ± 494.7 mV min/max
V_out_OPA2673 = ± 1.806V min/max
V_out_AWG = ± 1.003V min/max

M. Zimmermann

Sheet: /DAC/
File: DAC.kicad_sch

Title: AWG for DHO8/900

Size: A4	Date: 2026−04−14	Rev: V3
KiCad E.D.A. 9.0.1		Id: 3/6

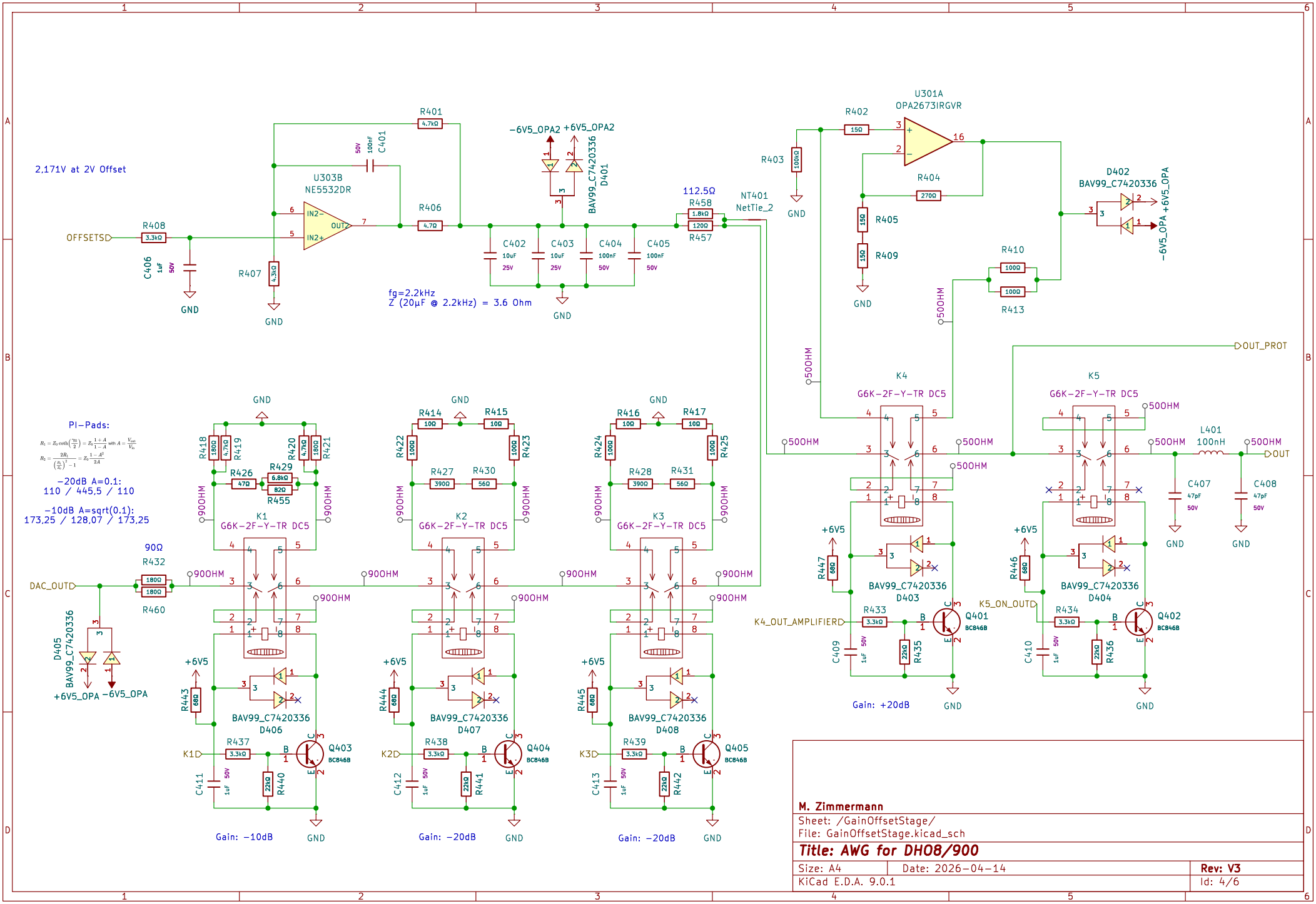

M. Zimmermann

Sheet: /GainOffsetStage/

File: GainOffsetStage.kicad_sch

Title: AWG for DHO8/900

Size: A4	Date: 2026-04-14	Rev: V3
KiCad E.D.A. 9.0.1		Id: 4/6

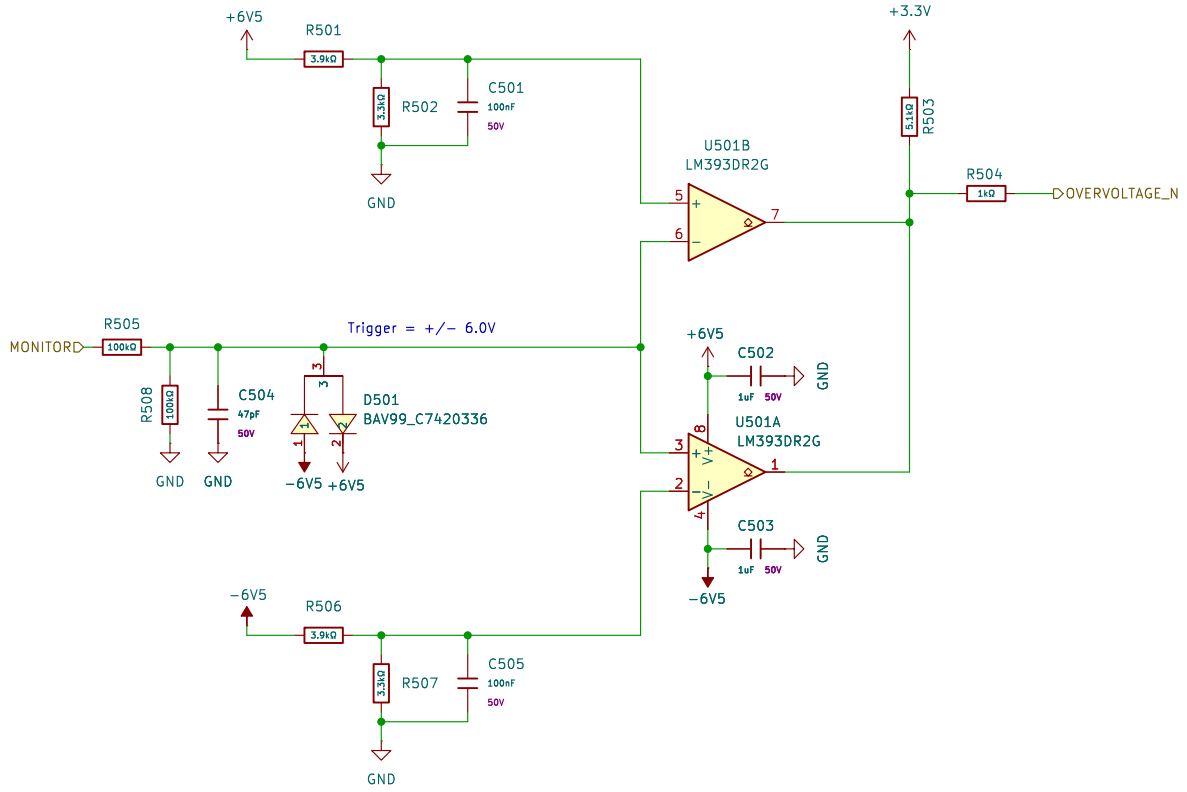

M. Zimmermann

Sheet: /OvervoltageProtection/
File: OvervoltageProtection.kicad_sch

Title: AWG for DHO8/900

Size: A4	Date: 2026-04-14	**Rev: V3**
KiCad E.D.A. 9.0.1		Id: 5/6

V1 – 17.05.2025 – M. Zimmermann:
Initial release

V2 – 07.06.2025 – M. Zimmermann:
Fixes after measurements:
1. Changed R306, R212 from 100kOhm to 2.7kOhm.
   – Amplitude dependent Offset–Bug, caused by NE5532 Bias current.
   – Improved gain accuracy, also adapted documented calculation
2. Mechanical improvements
   – BNC connector moved by 0.5mm to the left and turned by 45°
   – moved traces too close to mounting screw (however, still not perfect)
   – reduced the board size close to the heatsink by 0.6mm

V3 – 14.04.2026 – M. Zimmermann
Bugfix: Pins A0 and A1 of U301 (OPA2673) were connected to –6.5V, but are now correctly connected to GND. This can cause U301 to get hot.

M. Zimmermann

Sheet: /History/
File: History.kicad_sch

Title: AWG for DHO8/900

Size: A4	Date: 2026–04–14	**Rev: V3**
KiCad E.D.A. 9.0.1		Id: 6/6