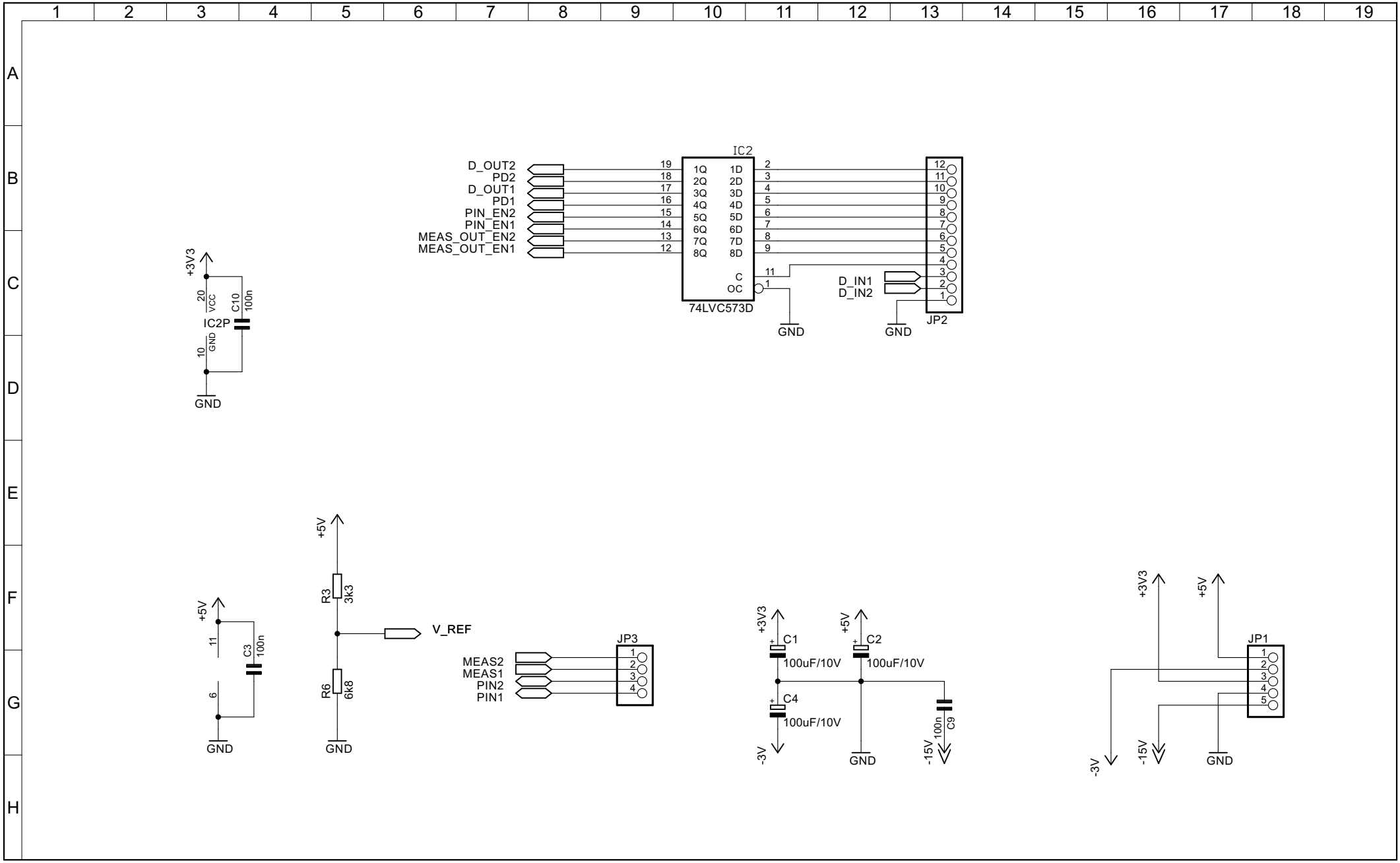
IC2
74LVC573D
D_OUT2
PD2
D_OUT1
PD1
PIN_EN2
PIN_EN1
MEAS_OUT_EN2
MEAS_OUT_EN1
1Q 2Q 3Q 4Q 5Q 6Q 7Q 8Q
1D 2D 3D 4D 5D 6D 7D 8D
C
OC
GND
D_IN1
D_IN2
JP2
+3V3
VCC
C10
100n
IC2P
GND
+5V
C3
100n
R3
3k3
R6
6k8
V_REF
JP3
MEAS2
MEAS1
PIN2
PIN1
C1
100uF/10V
C2
100uF/10V
C4
100uF/10V
-3V
-15V
C9
100n
JP1

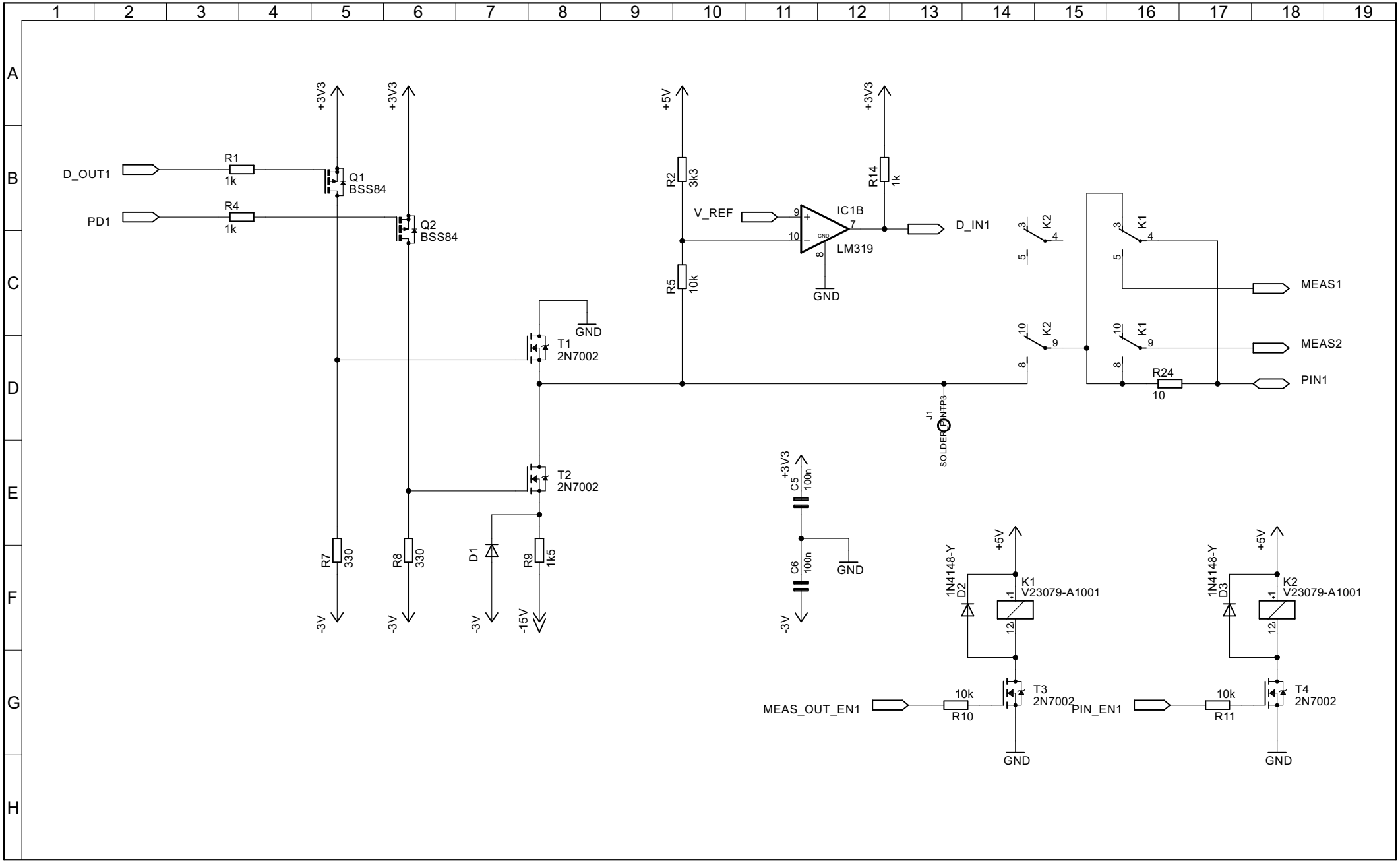
D_OUT1
PD1
R1
1k
R4
1k
Q1
BSS84
Q2
BSS84
+3V3
+3V3
+5V
+3V3
R2
3k3
R5
10k
V_REF
IC1B
LM319
GND
R14
1k
D_IN1
K2
K1
MEAS1
MEAS2
PIN1
R24
10
T1
2N7002
T2
2N7002
J1
SOLDER_CONTR3
C5
100n
C6
100n
R7
330
R8
330
D1
R9
1k5
-3V
-15V
1N4148-Y
D2
D3
K1
V23079-A1001
K2
V23079-A1001
MEAS_OUT_EN1
10k
R10
T3
2N7002
PIN_EN1
10k
R11
T4
2N7002

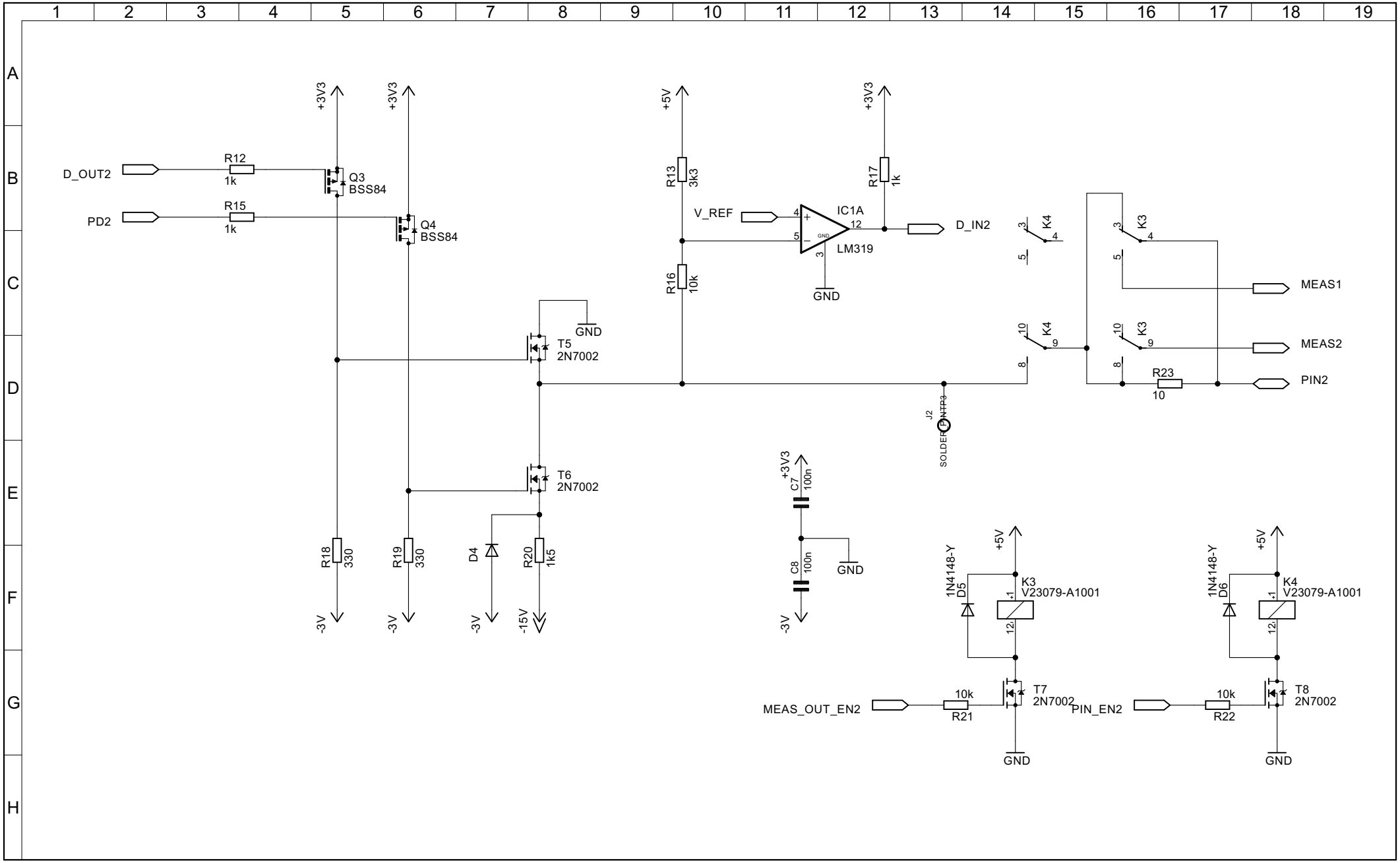
D_OUT2
PD2
R12
1k
R15
1k
Q3
BSS84
Q4
BSS84
+3V3
+3V3
+5V
+3V3
R13
3k3
R16
10k
R17
1k
V_REF
IC1A
LM319
GND
D_IN2
K4
K3
MEAS1
MEAS2
PIN2
R23
10
T5
2N7002
T6
2N7002
GND
J2
SOLDER_ON_TR3
R18
330
R19
330
D4
R20
1k5
-3V
-3V
-3V
-15V
C7
100n
C8
100n
GND
-3V
1N4148-Y
D5
K3
V23079-A1001
1N4148-Y
D6
K4
V23079-A1001
+5V
+5V
MEAS_OUT_EN2
10k
R21
T7
2N7002
PIN_EN2
10k
R22
T8
2N7002
GND
GND