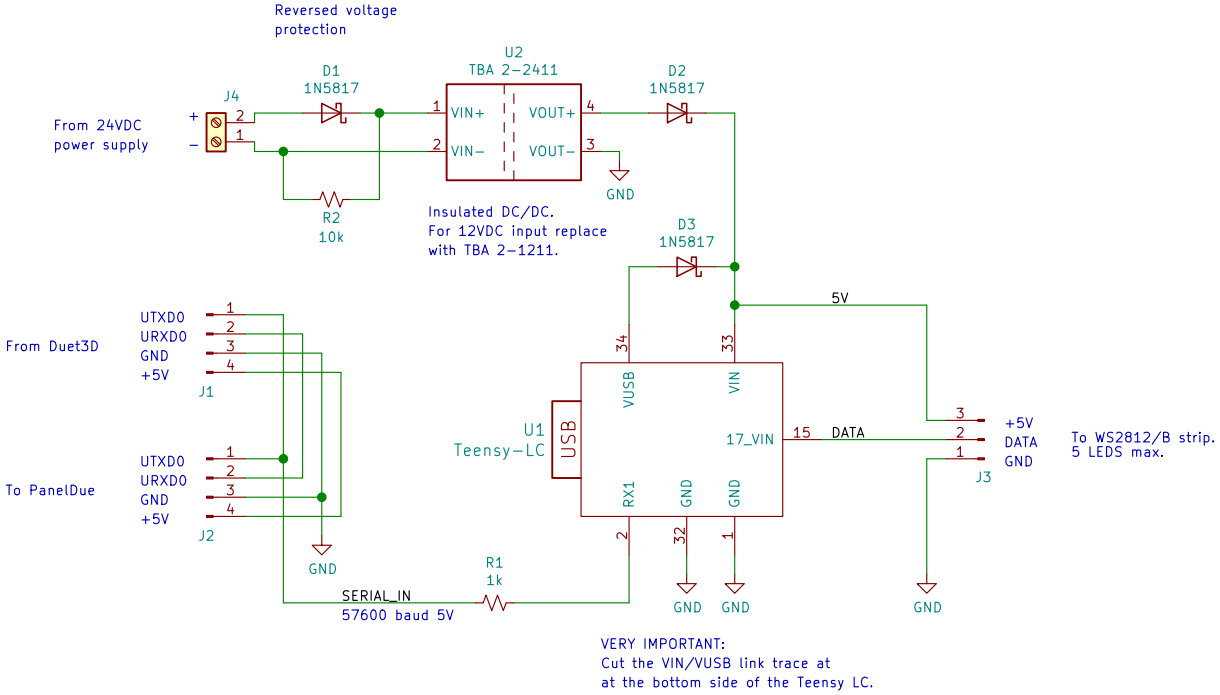


Duet3D status monitor.

Sheet: /
File: board.sch

**Title:**

| Size: A4 | Date: | **Rev:** |
|---|---|---|
| KiCad E.D.A. kicad (5.0.1-3-g963ef8bb5) | | Id: 1/1 |