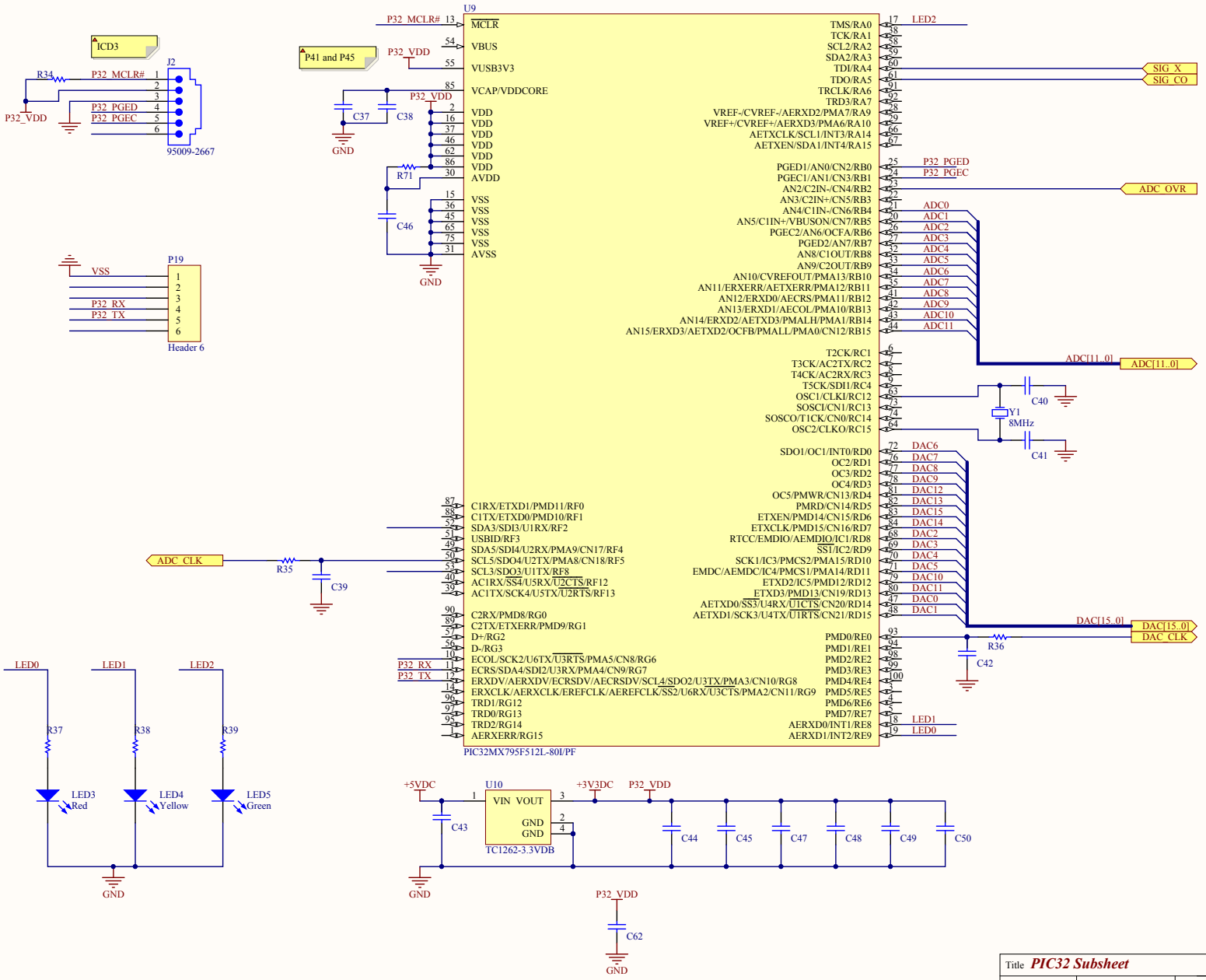

Title	***PIC32 Subsheet***		
Size: A3	Number:293	Revision:A	Author : Matthew Southgate Engineer : Matthew Southgate
Date: 08/05/2014	Time: 11:12:31	Sheet 1 of =	
File: B293A PIC32.SchDoc			

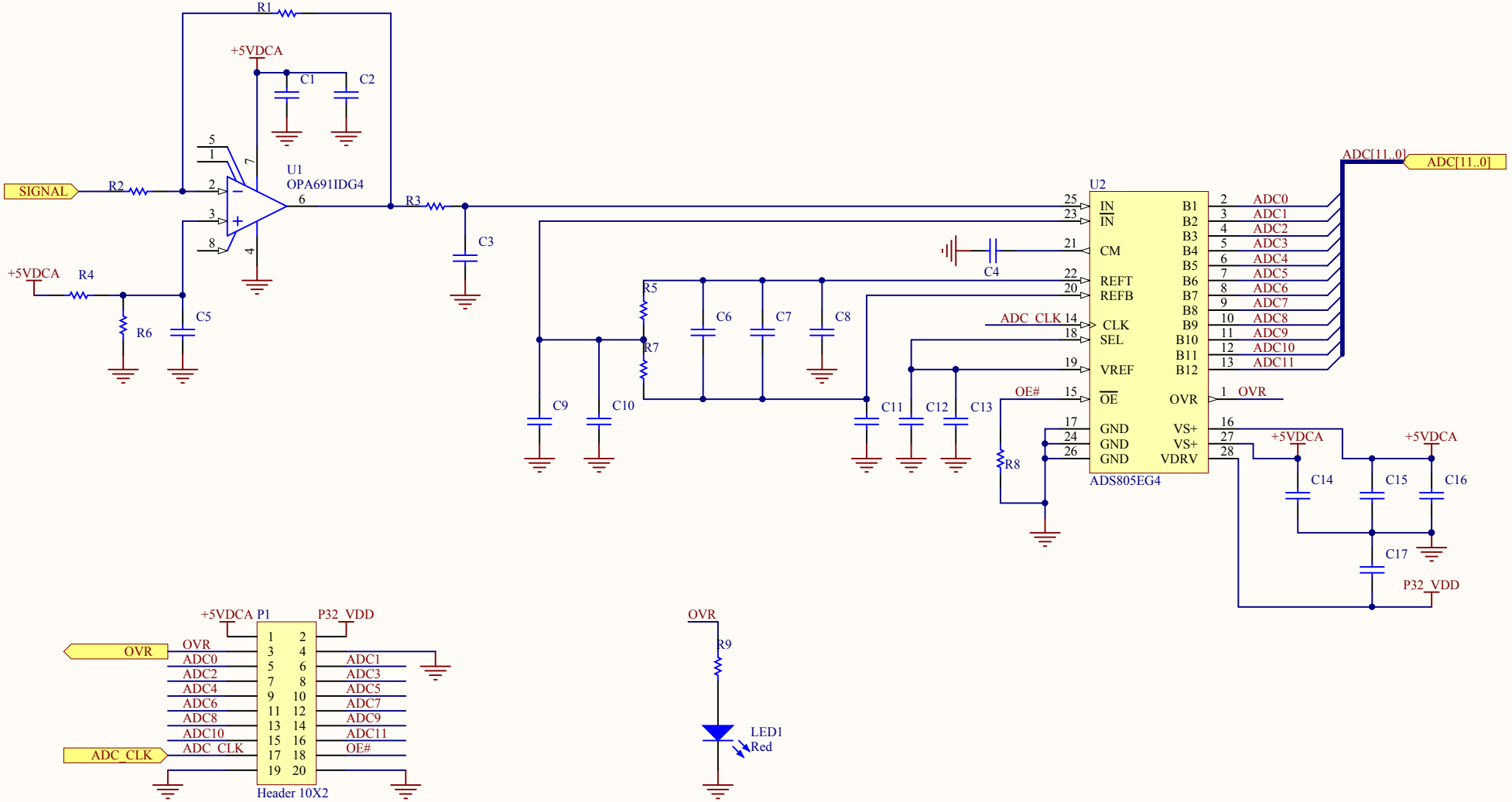

Title *ADC*			
Size: A4	Number:293	Revision:A	Author : Matthew Southgate
Date: 08/05/2014	Time: 11:12:31	Sheet* of *	Engineer : Matthew Southgate
File: B293A ADC.SchDoc			

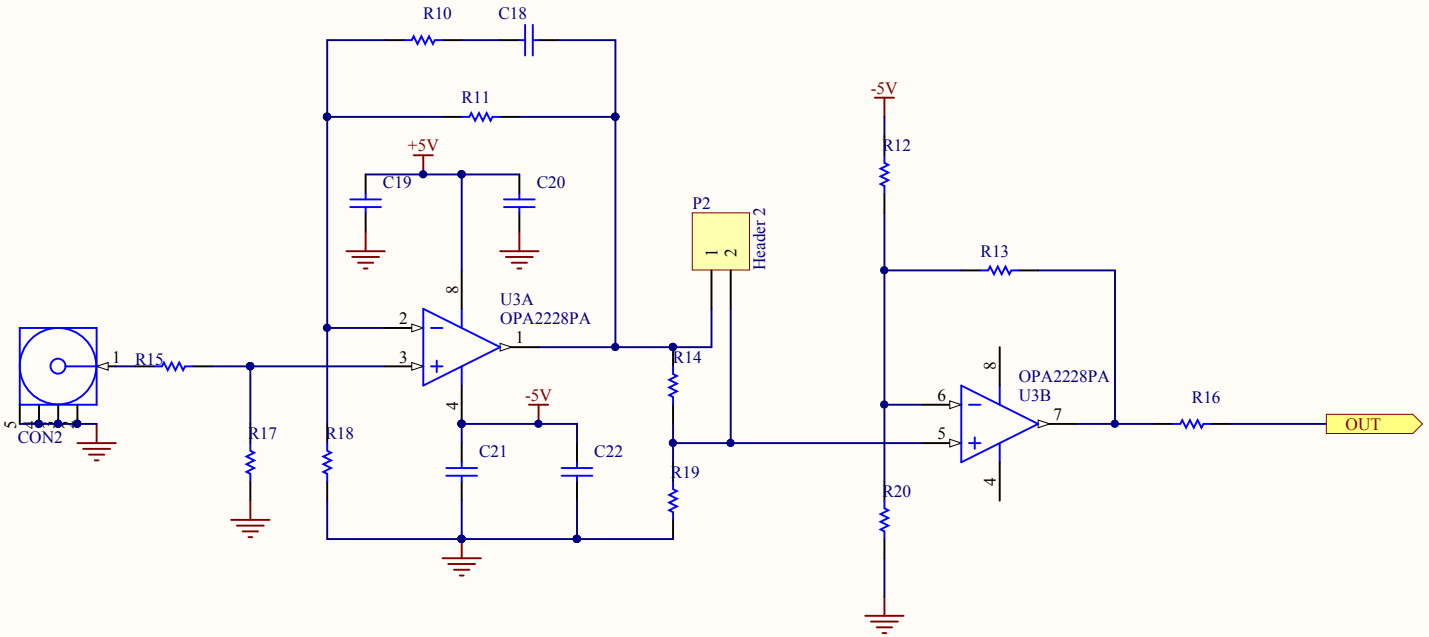

Title	***CoX Amp***		
Size: A4	Number:293	Revision:A	Author : Matthew Southgate Engineer : Matthew Southgate
Date: 08/05/2014 Time: 11:12:31		Sheet* of *	
File: B293A CoX Amp.SchDoc			

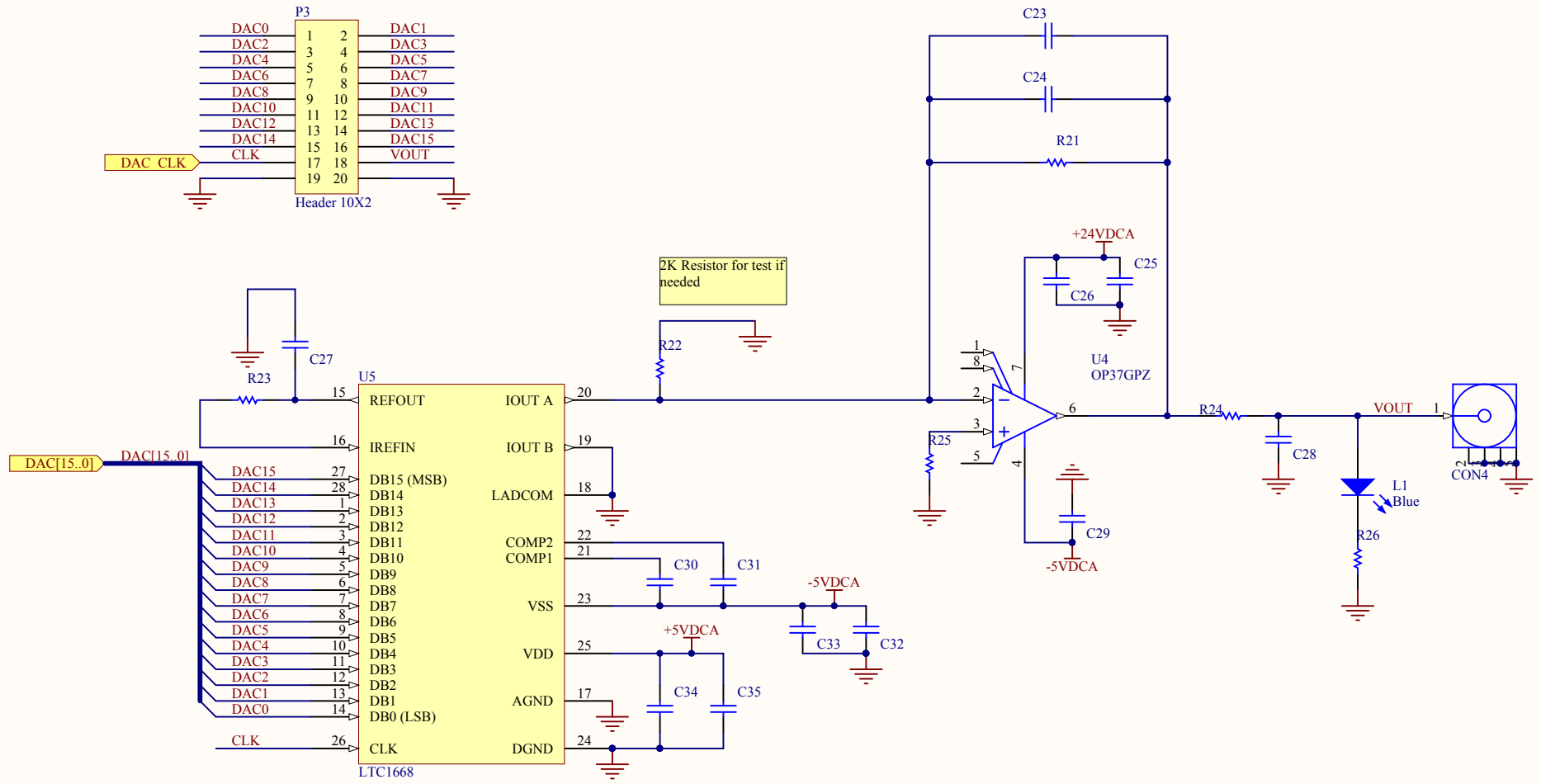

Title *DAC*			
Size: A4	Number:293	Revision:A	Author : Matthew Southgate
Date: 08/05/2014	Time: 11:12:31	Sheet* of *	Engineer : Matthew Southgate
File: B293A DAC.SchDoc			

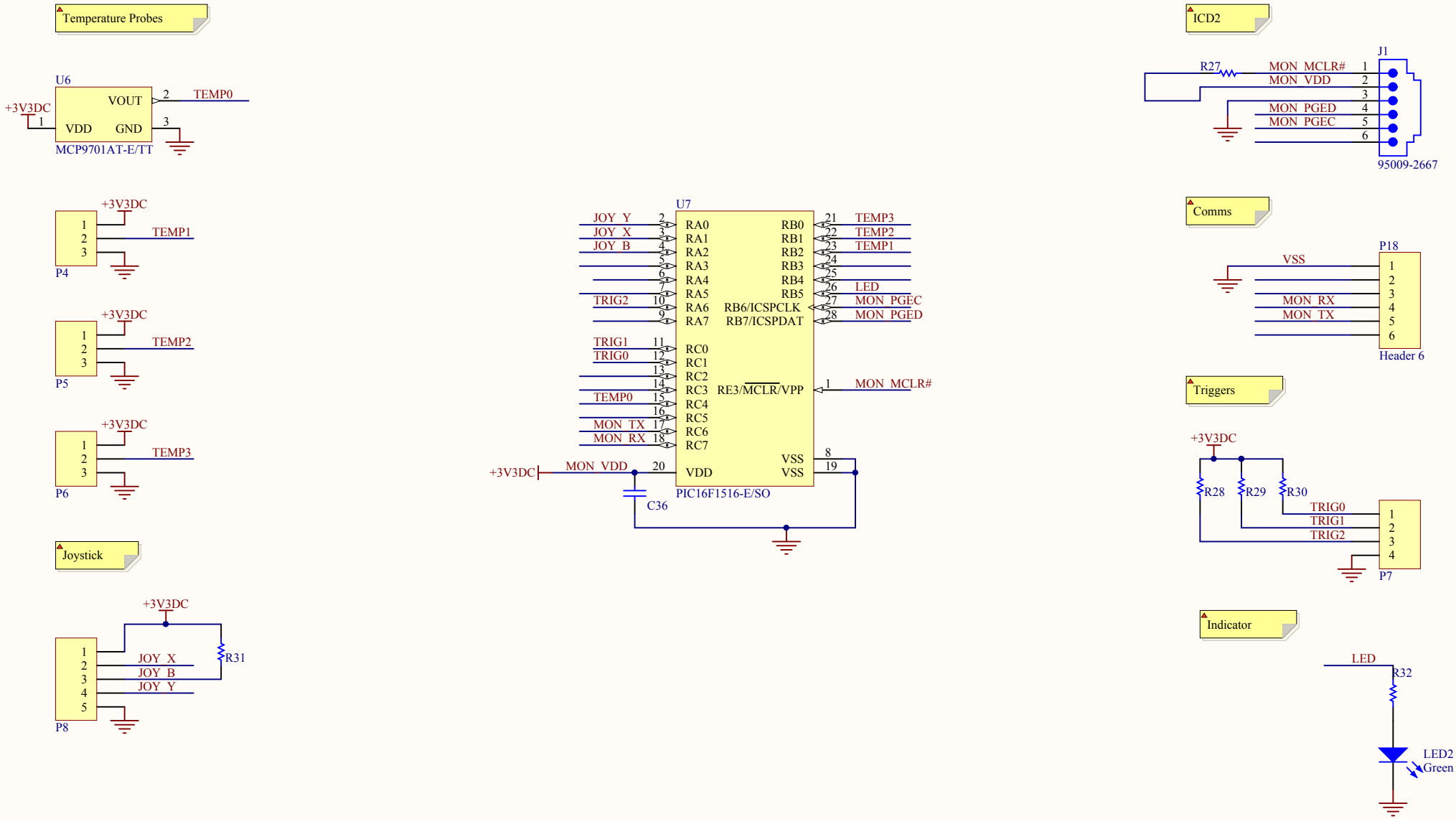

Title	***Monitor Circuits***		
Size: A4	Number:293	Revision:A	Author : Matthew Southgate
Date: 08/05/2014	Time: 11:12:31	Sheet* of *	Engineer : Matthew Southgate
File: B293A Monitor.SchDoc			

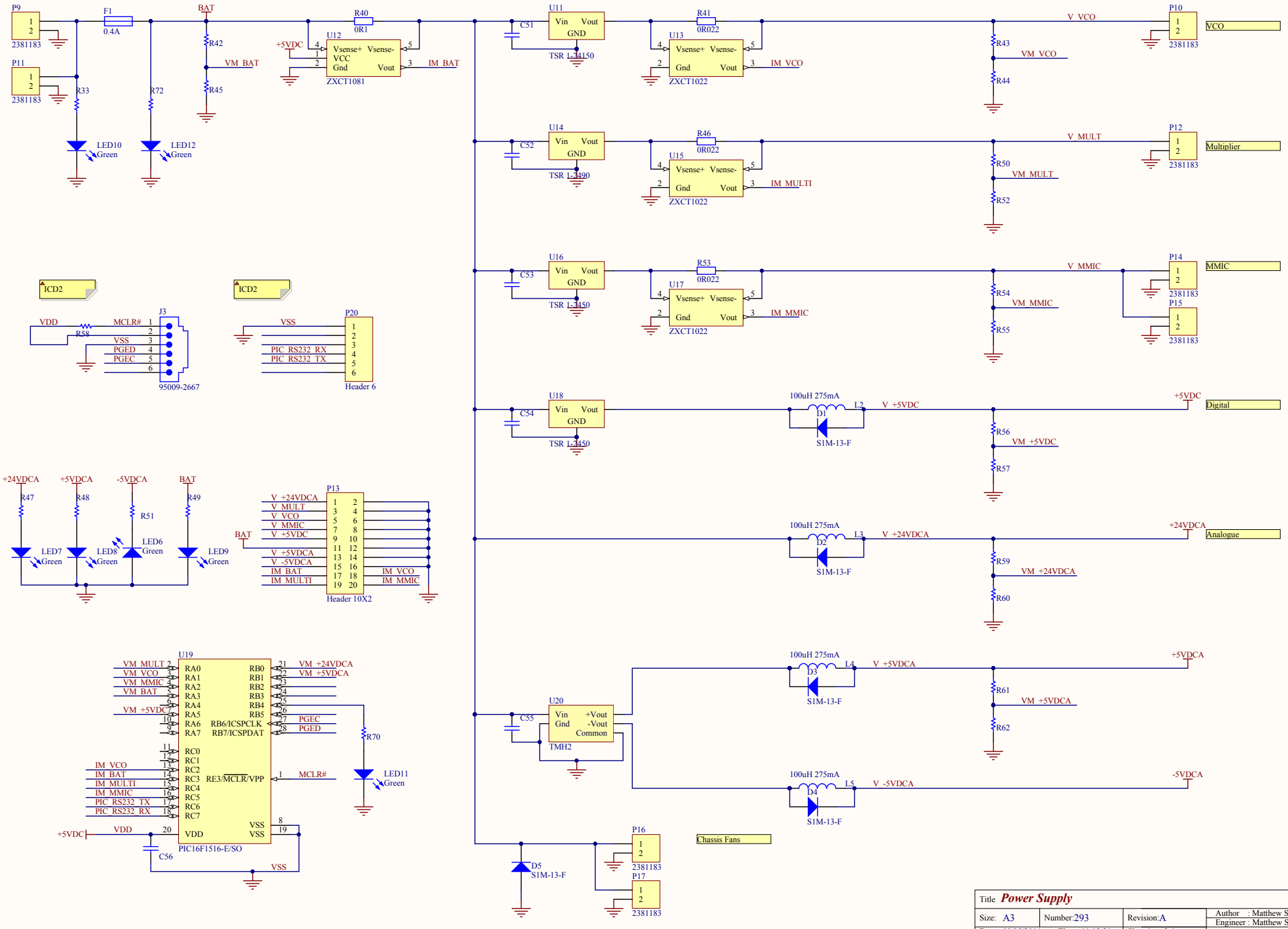
P9
P11
2381183
F1
0.4A
BAT
R42
VM_BAT
R45
R33
R72
LED10
Green
LED12
Green
U12
+5VDC
Vsense+ Vsense-
VCC
Gnd Vout
ZXCT1081
R40
0R1
IM_BAT
U11
Vin Vout
GND
C51
TSR 1-2450
U13
R41
0R022
ZXCT1022
IM_VCO
V_VCO
R43
VM_VCO
R44
P10
VCO
U14
C52
TSR 1-2490
U15
R46
0R022
IM_MULTI
V_MULT
R50
VM_MULT
R52
P12
Multiplier
U16
C53
TSR 1-2450
U17
R53
0R022
IM_MMIC
V_MMIC
R54
VM_MMIC
R55
P14
MMIC
P15
ICD2
J3
VDD
R58
MCLR#
VSS
PGED
PGEC
95009-2667
ICD2
P20
VSS
PIC_RS232_RX
PIC_RS232_TX
Header 6
U18
C54
TSR 1-2450
100uH 275mA
L2
D1
S1M-13-F
V +5VDC
R56
VM +5VDC
R57
+5VDC
Digital
+24VDCA
+5VDCA
-5VDCA
BAT
R47
R48
R51
R49
LED7
Green
LED8
Green
LED6
Green
LED9
Green
P13
V +24VDCA
V MULT
V VCO
V MMIC
V +5VDC
V +5VDCA
V -5VDCA
IM BAT
IM MULTI
IM VCO
IM MMIC
Header 10X2
100uH 275mA
L3
D2
S1M-13-F
V +24VDCA
R59
VM +24VDCA
R60
+24VDCA
Analogue
U19
VM_MULT
VM_VCO
VM_MMIC
VM_BAT
VM_+5VDC
IM_VCO
IM_BAT
IM_MULTI
IM_MMIC
PIC_RS232_TX
PIC_RS232_RX
RA0 RA1 RA2 RA3 RA4 RA5 RA6 RA7
RB0 RB1 RB2 RB3 RB4 RB5 RB6/ICSPCLK RB7/ICSPDAT
RC0 RC1 RC2 RC3 RC4 RC5 RC6 RC7
RE3/MCLR/VPP
VDD VSS
VM_+24VDCA
VM_+5VDCA
PGEC
PGED
MCLR#
R70
LED11
Green
+5VDC
VDD
C56
VSS
PIC16F1516-E/SO
U20
Vin +Vout
Gnd -Vout
Common
C55
TMH2
100uH 275mA
L4
D3
S1M-13-F
V +5VDCA
R61
VM +5VDCA
R62
+5VDCA
100uH 275mA
L5
D4
S1M-13-F
V -5VDCA
-5VDCA
D5
S1M-13-F
P16
P17
2381183
Chassis Fans
Title Power Supply
Size: A3
Number:293
Revision:A
Author : Matthew Southgate
Engineer : Matthew Southgate
Date: 08/05/2014
Time: 11:12:31
Sheet* of *
File: B293A PSU.SchDoc

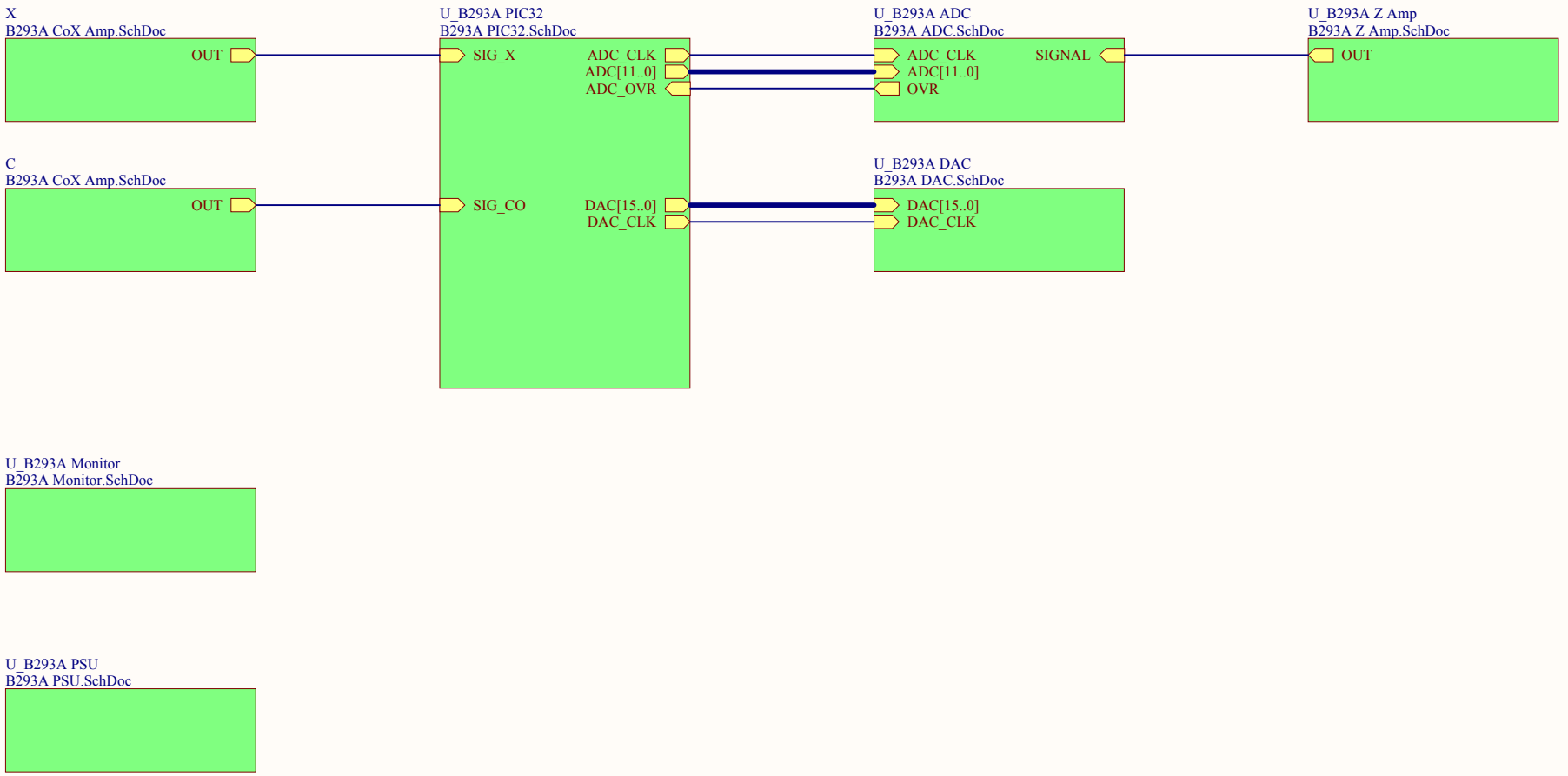

Title		
Size A4	Number	Revision
Date: 08/05/2014		Sheet of
File: C:\Files\..\B293A Top.SchDoc		Drawn By:

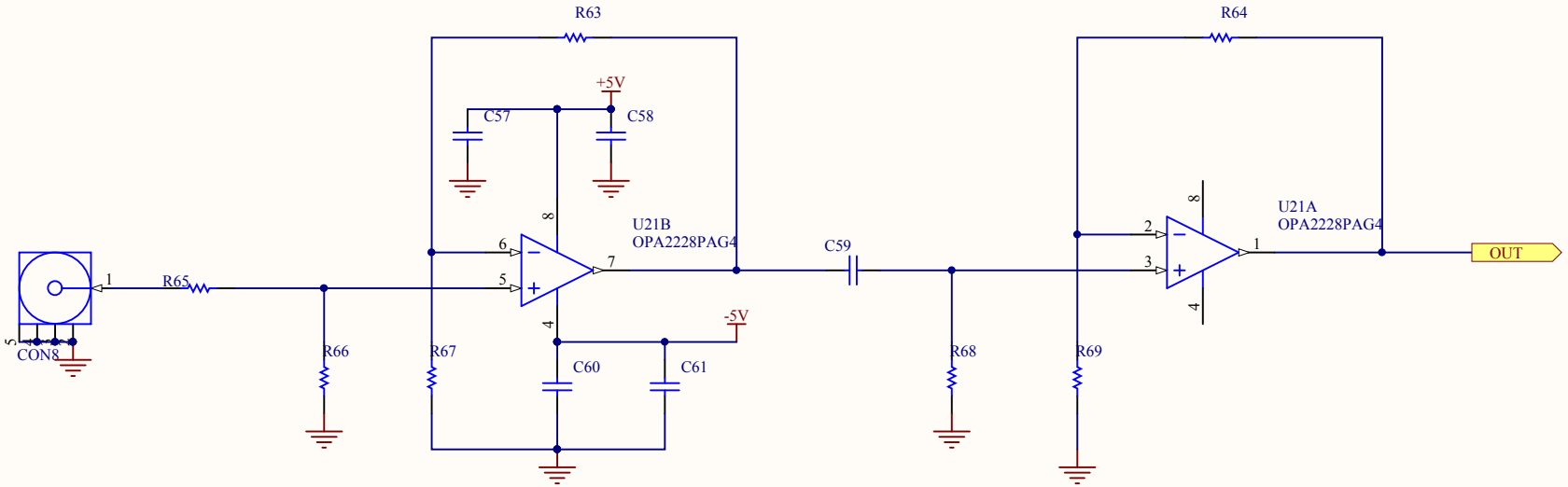

Title	***Z Amp***		
Size: A4	Number:293	Revision:A	Author : Matthew Southgate Engineer : Matthew Southgate
Date: 08/05/2014	Time: 11:12:32	Sheet* of *	
File: B293A Z Amp.SchDoc			

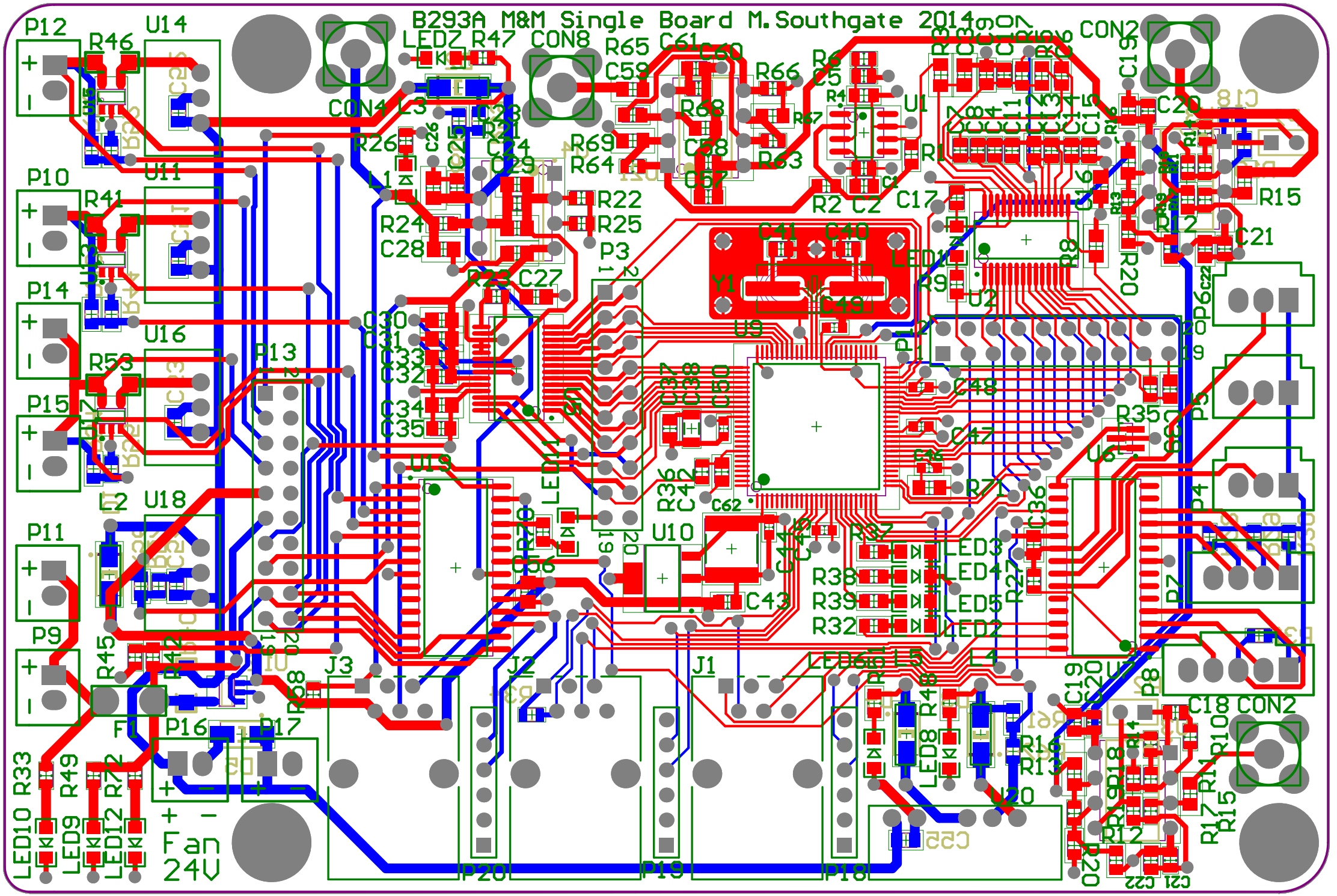
B293A M&M Single Board M.Southgate 2014
Fan
24V

Board S