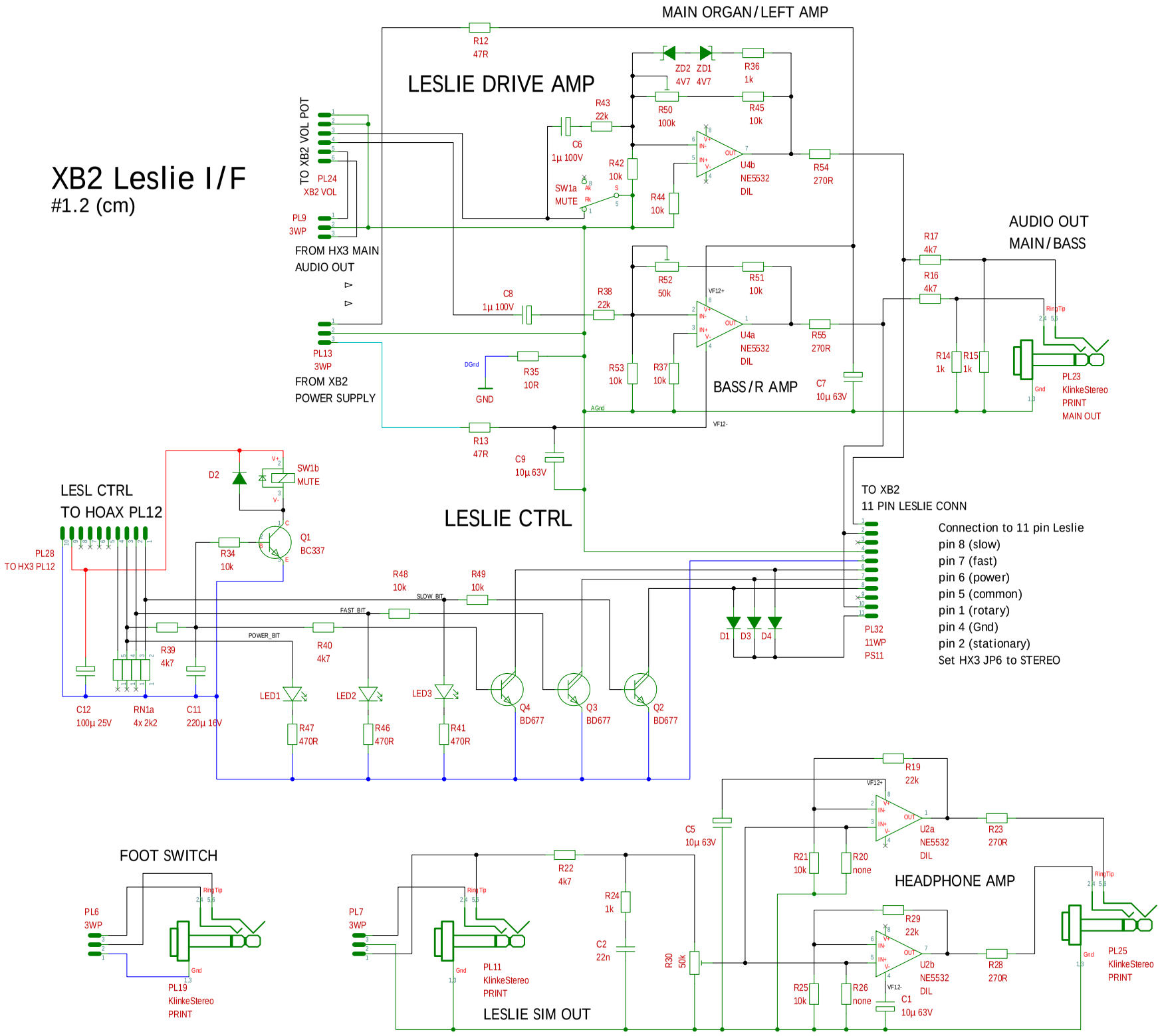
XB2 Leslie I/F
#1.2 (cm)
MAIN ORGAN/LEFT AMP
LESLIE DRIVE AMP
TO XB2 VOL POT
PL24
XB2 VOL
PL9
3WP
FROM HX3 MAIN
AUDIO OUT
PL13
3WP
FROM XB2
POWER SUPPLY
R12
47R
ZD2 4V7
ZD1 4V7
R36
1k
R50
100k
R45
10k
R43
22k
C6
1µ 100V
R42
10k
SW1a
MUTE
R44
10k
U4b
NE5532
DIL
R54
270R
R52
50k
R51
10k
C8
1µ 100V
R38
22k
U4a
NE5532
DIL
R55
270R
R53
10k
R37
10k
BASS/R AMP
C7
10µ 63V
DGnd
R35
10R
GND
AGnd
VF12-
R13
47R
C9
10µ 63V
AUDIO OUT
MAIN/BASS
R17
4k7
R16
4k7
R14
1k
R15
1k
PL23
KlinkeStereo
PRINT
MAIN OUT
LESL CTRL
TO HOAX PL12
PL28
TO HX3 PL12
D2
SW1b
MUTE
Q1
BC337
R34
10k
LESLIE CTRL
TO XB2
11 PIN LESLIE CONN
Connection to 11 pin Leslie
pin 8 (slow)
pin 7 (fast)
pin 6 (power)
pin 5 (common)
pin 1 (rotary)
pin 4 (Gnd)
pin 2 (stationary)
Set HX3 JP6 to STEREO
R48
10k
R49
10k
SLOW_BIT
FAST_BIT
POWER_BIT
R39
4k7
R40
4k7
D1
D3
D4
PL32
11WP
PS11
C12
100µ 25V
RN1a
4x 2k2
C11
220µ 16V
LED1
LED2
LED3
R47
470R
R46
470R
R41
470R
Q4
BD677
Q3
BD677
Q2
BD677
FOOT SWITCH
PL6
3WP
PL19
KlinkeStereo
PRINT
PL7
3WP
PL11
KlinkeStereo
PRINT
LESLIE SIM OUT
R22
4k7
R24
1k
C2
22n
R30
50k
C5
10µ 63V
R19
22k
U2a
NE5532
DIL
R23
270R
R21
10k
R20
none
HEADPHONE AMP
R29
22k
U2b
NE5532
DIL
R28
270R
R25
10k
R26
none
C1
10µ 63V
PL25
KlinkeStereo
PRINT