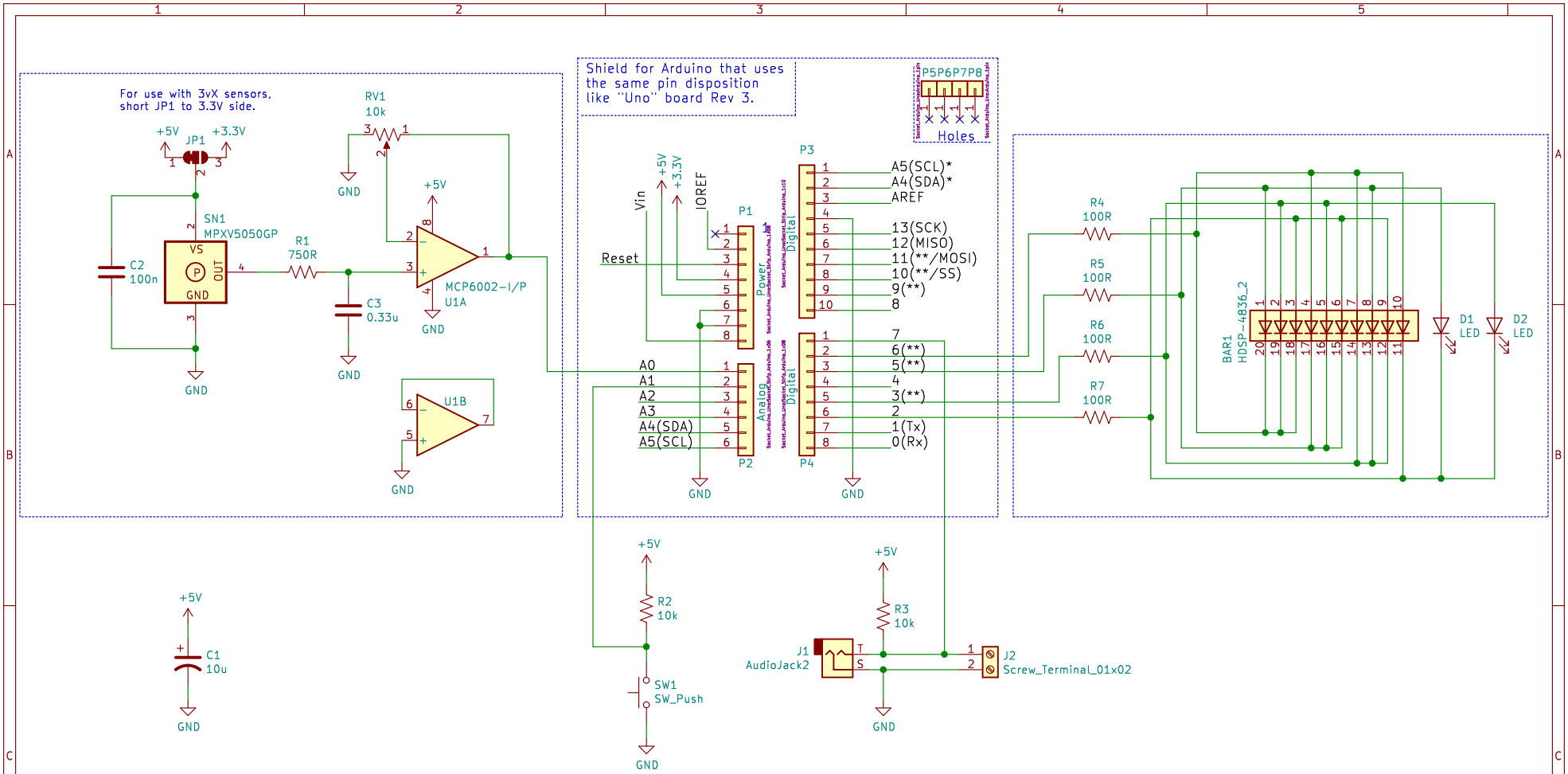

Maus-Tec Electronics

Sheet: /

File: eom-uno-pressure-shield.sch

Title: EOM Pressure Shield for Arduino Uno

Size: USLetter	Date: 2021-01-09	**Rev:**
KiCad E.D.A. kicad (5.1.4)-1		Id: 1/1