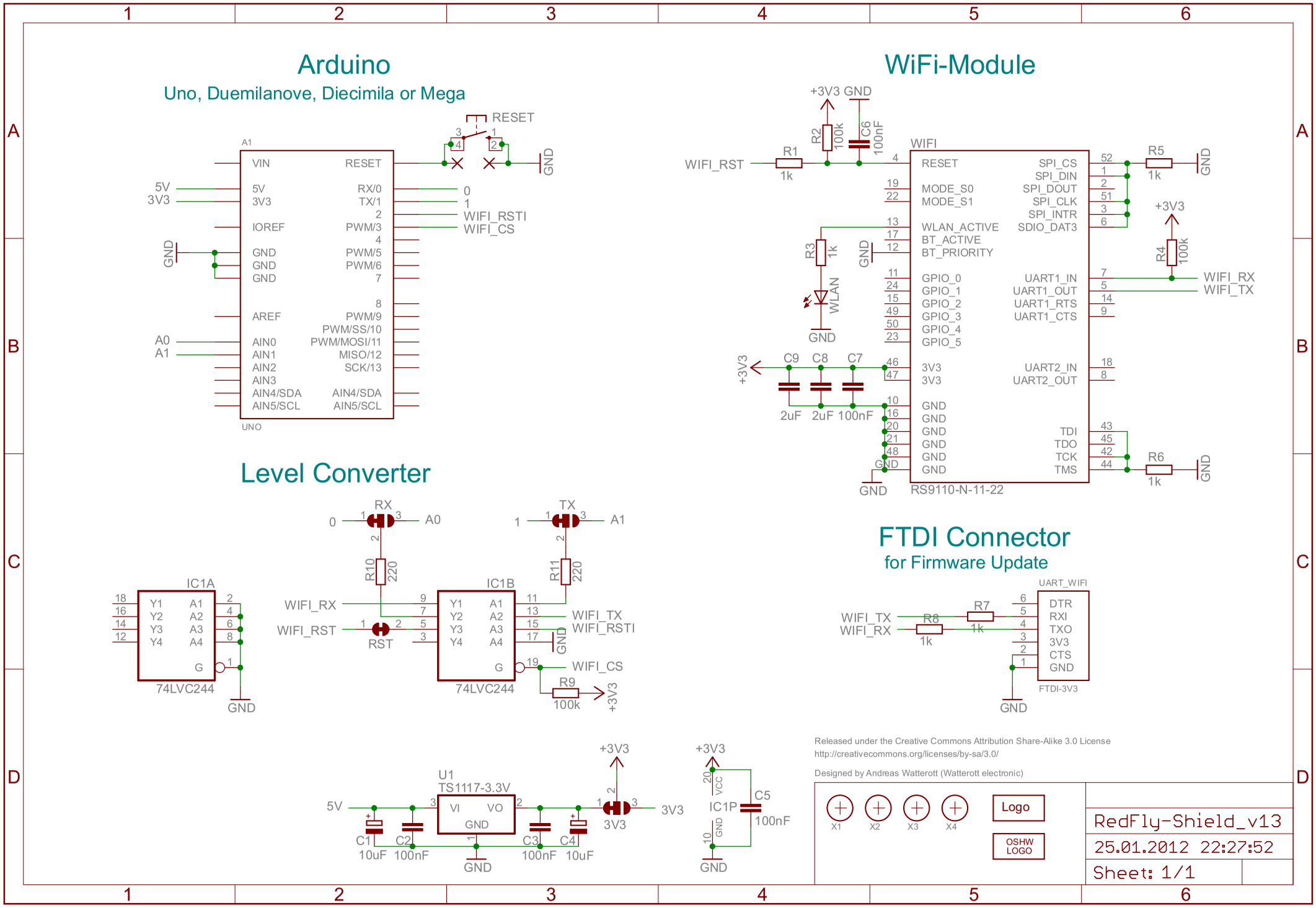
Arduino
Uno, Duemilanove, Diecimila or Mega
A1
VIN
5V
3V3
IOREF
GND
GND
GND
AREF
AIN0
AIN1
AIN2
AIN3
AIN4/SDA
AIN5/SCL
RESET
RX/0
TX/1
2
PWM/3
4
PWM/5
PWM/6
7
8
PWM/9
PWM/SS/10
PWM/MOSI/11
MISO/12
SCK/13
AIN4/SDA
AIN5/SCL
UNO
RESET
GND
5V
3V3
A0
A1
0
1
WIFI_RSTI
WIFI_CS
WiFi-Module
+3V3 GND
R2 100k
C6 100nF
WIFI_RST
R1 1k
WIFI
RESET
MODE_S0
MODE_S1
WLAN_ACTIVE
BT_ACTIVE
BT_PRIORITY
GPIO_0
GPIO_1
GPIO_2
GPIO_3
GPIO_4
GPIO_5
3V3
3V3
GND
SPI_CS
SPI_DIN
SPI_DOUT
SPI_CLK
SPI_INTR
SDIO_DAT3
UART1_IN
UART1_OUT
UART1_RTS
UART1_CTS
UART2_IN
UART2_OUT
TDI
TDO
TCK
TMS
RS9110-N-11-22
R5 1k
GND
+3V3
R4 100k
WIFI_RX
WIFI_TX
R3 1k
WLAN
GND
+3V3
C9 C8 C7
2uF 2uF 100nF
R6 1k
GND
Level Converter
RX
0
A0
R10 220
TX
1
A1
R11 220
IC1A
74LVC244
IC1B
74LVC244
WIFI_RX
WIFI_RST
RST
WIFI_TX
WIFI_RSTI
WIFI_CS
R9 100k
+3V3
GND
FTDI Connector
for Firmware Update
UART_WIFI
WIFI_TX
WIFI_RX
R8 1k
R7 1k
DTR
RXI
TXO
3V3
CTS
GND
FTDI-3V3
GND
U1
TS1117-3.3V
5V
VI
VO
GND
C1 10uF
C2 100nF
C3 100nF
C4 10uF
+3V3
3V3
3V3
+3V3
IC1P
VCC
GND
C5 100nF
GND
Released under the Creative Commons Attribution Share-Alike 3.0 License
http://creativecommons.org/licenses/by-sa/3.0/
Designed by Andreas Watterott (Watterott electronic)
X1
X2
X3
X4
Logo
OSHW LOGO
RedFly-Shield_v13
25.01.2012 22:27:52
Sheet: 1/1