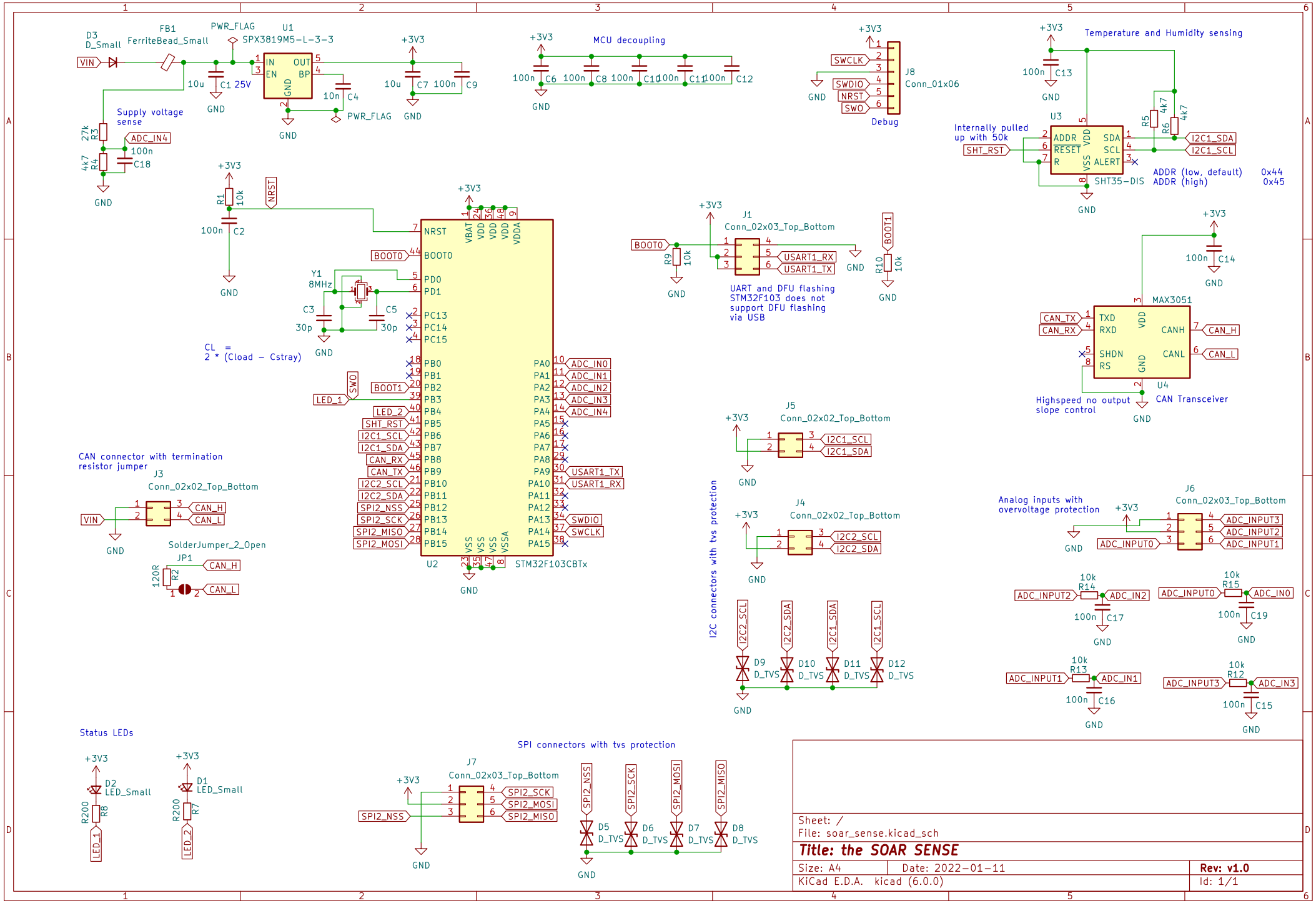
D3
D_Small
FB1
FerriteBead_Small
PWR_FLAG
U1
SPX3819M5-L-3-3
VIN
IN
EN
OUT
BP
GND
10u
C1 25V
10n C4
PWR_FLAG
+3V3
10u
C7 100n
C9
Supply voltage sense
27k R3
4k7 R4
ADC_IN4
100n
C18
MCU decoupling
100n C6
100n C8
100n C10
100n C11
100n C12
J8
Conn_01x06
SWCLK
SWDIO
NRST
SWO
Debug
Temperature and Humidity sensing
100n C13
U3
ADDR
RESET
R
VDD
VSS
SDA
SCL
ALERT
SHT35-DIS
R5 4k7
R6 4k7
I2C1_SDA
I2C1_SCL
SHT_RST
Internally pulled up with 50k
ADDR (low, default) 0x44
ADDR (high) 0x45
R1 10k
NRST
100n C2
Y1
8MHz
C3 30p
C5 30p
CL =
2 * (Cload - Cstray)
NRST
BOOT0
PD0
PD1
PC13
PC14
PC15
PB0
PB1
PB2
PB3
PB4
PB5
PB6
PB7
PB8
PB9
PB10
PB11
PB12
PB13
PB14
PB15
PA0
PA1
PA2
PA3
PA4
PA5
PA6
PA7
PA8
PA9
PA10
PA11
PA12
PA13
PA14
PA15
VBAT
VDD
VDDA
VSS
VSSA
ADC_IN0
ADC_IN1
ADC_IN2
ADC_IN3
ADC_IN4
BOOT1
LED_1
SWO
LED_2
SHT_RST
I2C1_SCL
I2C1_SDA
CAN_RX
CAN_TX
I2C2_SCL
I2C2_SDA
SPI2_NSS
SPI2_SCK
SPI2_MISO
SPI2_MOSI
USART1_TX
USART1_RX
SWDIO
SWCLK
U2
STM32F103CBTx
J1
Conn_02x03_Top_Bottom
BOOT0
R9 10k
USART1_RX
USART1_TX
UART and DFU flashing
STM32F103 does not support DFU flashing via USB
R10 10k
BOOT1
100n C14
MAX3051
TXD
RXD
SHDN
RS
CANH
CANL
CAN_H
CAN_L
U4
Highspeed no output slope control
CAN Transceiver
J5
Conn_02x02_Top_Bottom
I2C1_SCL
I2C1_SDA
J4
Conn_02x02_Top_Bottom
I2C2_SCL
I2C2_SDA
I2C connectors with tvs protection
D9 D_TVS
D10 D_TVS
D11 D_TVS
D12 D_TVS
CAN connector with termination resistor jumper
J3
Conn_02x02_Top_Bottom
SolderJumper_2_Open
JP1
120R R2
Analog inputs with overvoltage protection
J6
Conn_02x03_Top_Bottom
ADC_INPUT0
ADC_INPUT1
ADC_INPUT2
ADC_INPUT3
10k R14
10k R15
10k R13
10k R12
100n C17
100n C19
100n C16
100n C15
Status LEDs
D2
LED_Small
D1
LED_Small
R200 R8
R200 R7
SPI connectors with tvs protection
J7
Conn_02x03_Top_Bottom
SPI2_NSS
SPI2_SCK
SPI2_MOSI
SPI2_MISO
D5 D_TVS
D6 D_TVS
D7 D_TVS
D8 D_TVS
Sheet: /
File: soar_sense.kicad_sch
Title: the SOAR SENSE
Size: A4
Date: 2022-01-11
Rev: v1.0
KiCad E.D.A. kicad (6.0.0)
Id: 1/1