CORE

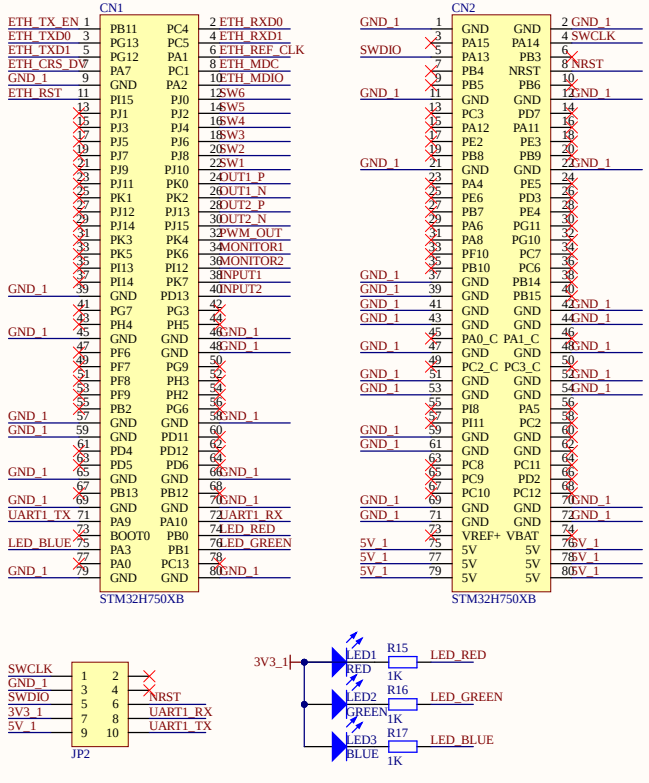

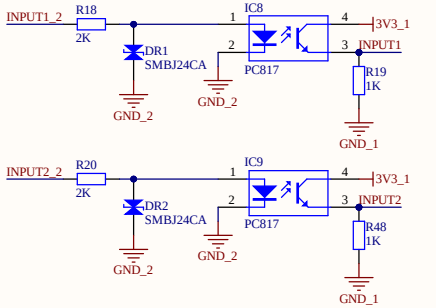

LDO

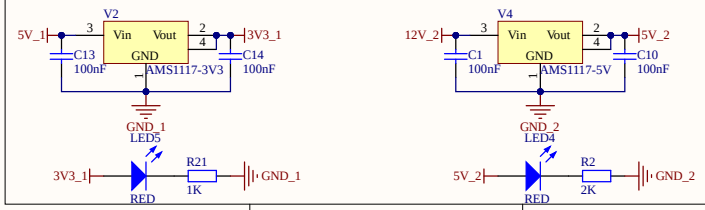

PHY

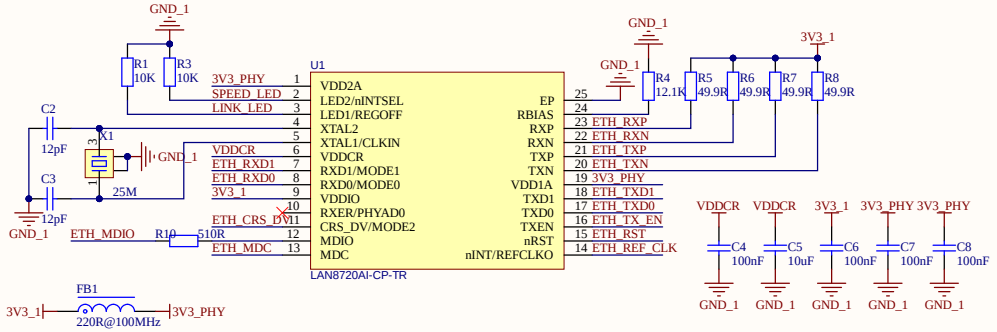

RJ45

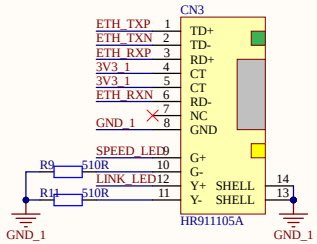

USB

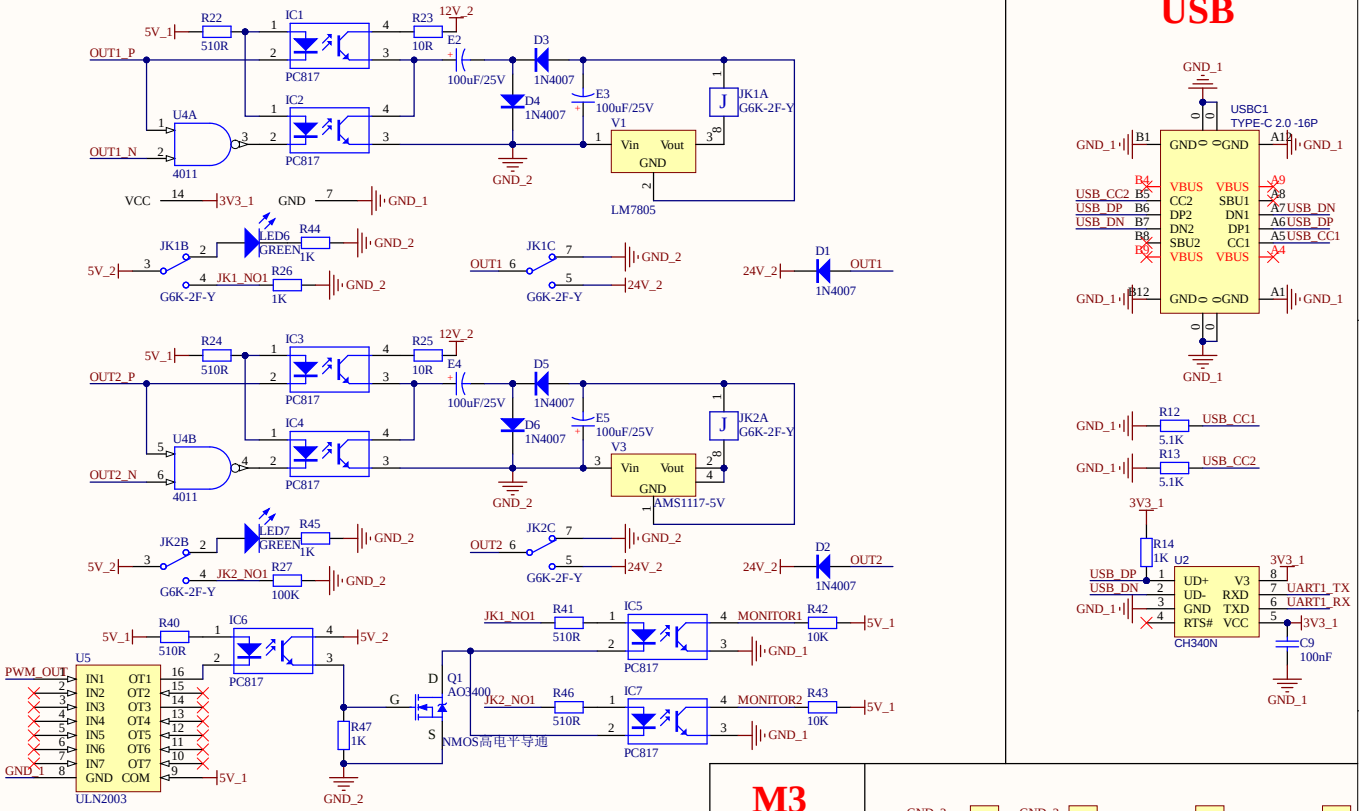

M3

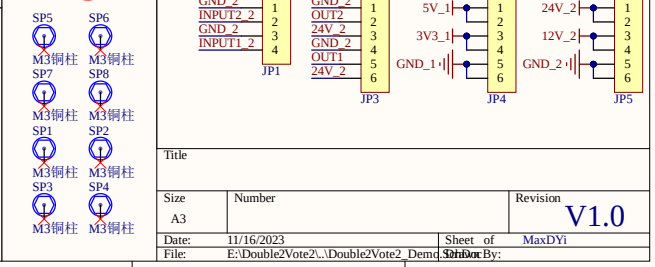

SW

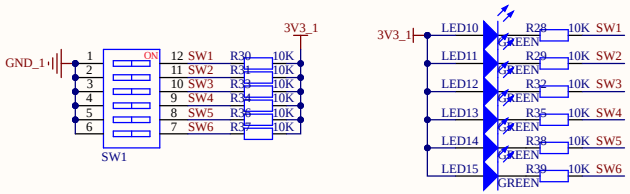

Title			
Size A3	Number		Revision V1.0
Date: 11/16/2023		Sheet of	Drawn By: MaxDYi
File: E:\Double2Vote2\..\Double2Vote2_Demo.SchDoc			