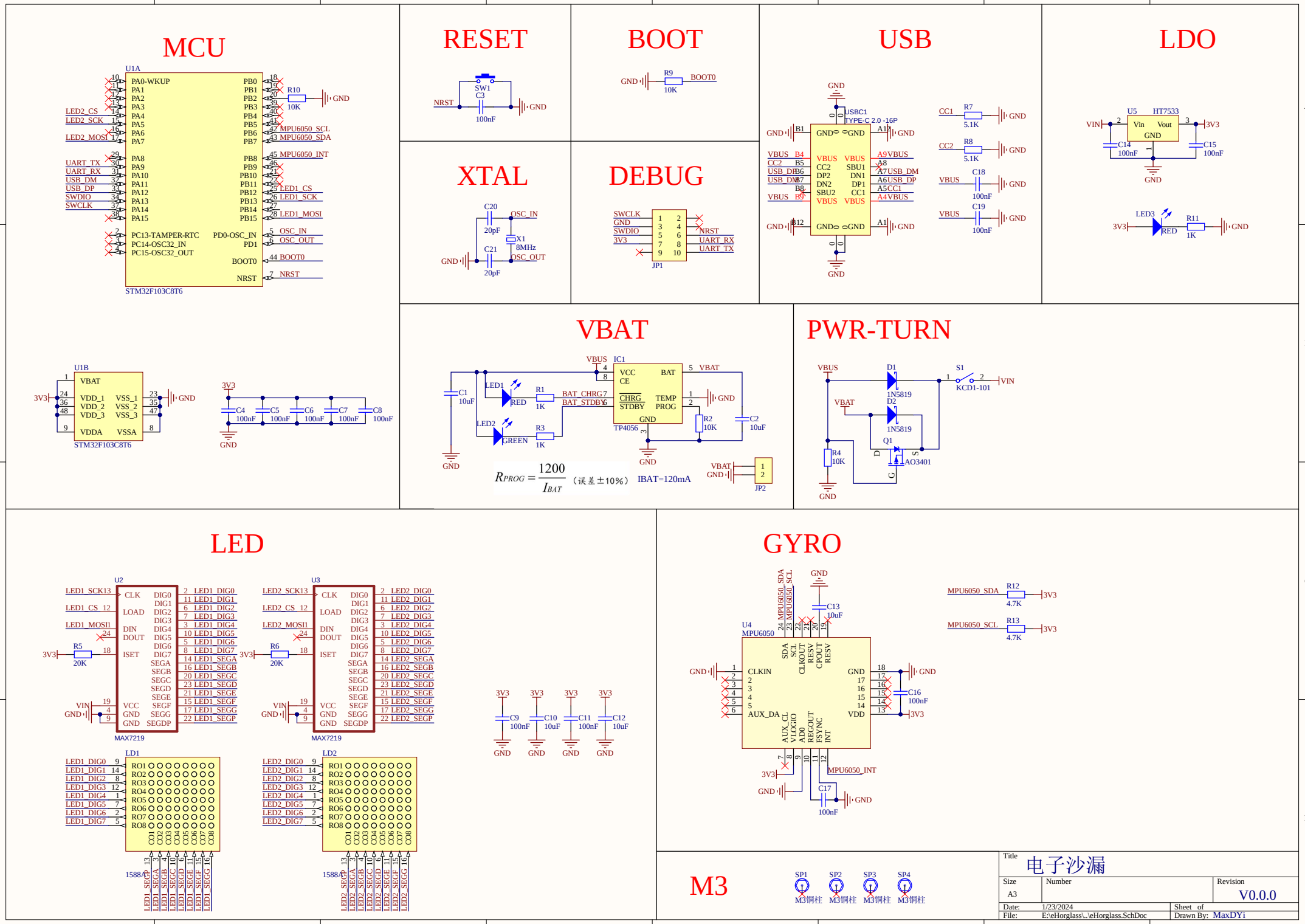
MCU
U1A
STM32F103C8T6
U1B
STM32F103C8T6
RESET
SW1
C3
100nF
BOOT
R9
10K
BOOT0
USB
USBC1
TYPE-C 2.0 -16P
R7
5.1K
R8
5.1K
C18
100nF
C19
100nF
LDO
U5
HT7533
C14
100nF
C15
100nF
LED3
RED
R11
1K
XTAL
C20
20pF
C21
20pF
X1
8MHz
DEBUG
JP1
VBAT
IC1
TP4056
C1
10uF
LED1
RED
R1
1K
LED2
GREEN
R3
1K
R2
10K
C2
10uF
JP2
IBAT=120mA
PWR-TURN
D1
1N5819
D2
1N5819
S1
KCD1-101
Q1
AO3401
R4
10K
LED
U2
U3
MAX7219
R5
20K
R6
20K
C9
100nF
C10
10uF
C11
100nF
C12
10uF
LD1
LD2
1588AS
GYRO
U4
MPU6050
C13
10uF
R12
4.7K
R13
4.7K
C16
100nF
C17
100nF
M3
SP1
SP2
SP3
SP4
M3铜柱
Title
电子沙漏
Size
A3
Number
Revision
V0.0.0
Date:
1/23/2024
Sheet of
File:
E:\eHorglass\..\eHorglass.SchDoc
Drawn By:
MaxDYi