SpeedyBee
F405 V4 BLS 55A 30x30 Stack

User Manual V1.0

Contents (Click on any section to jump)

Part 1 - OverView

- Specs Overview 1
- Dimensions 2
- Package 3
- FC & ESC Connection 4

Part 2 - SpeedyBee F405 V4 Flight Controller

- Layout 5
- FC's Peripheral Connection 6
- App & FC Configuration 7
- FC Firmware Update 8
- Specifications 9

Part 3 - SpeedyBee BLS 55A 4-in-1 ESC

- Layout 10
- Connection with Motors & Power Cable 11
- ESC Configuration 12
- ESC Firmware Update 13
- Specifications 14

Part 1 - OverView

Specs Overview

Product Name	SpeedyBee F405 V4 BLS 55A 30x30 Stack
Flight Controller	SpeedyBee F405 V4
ESC	SpeedyBee BLS 55A 4-in-1 ESC
Bluetooth	Supported. For FC & ESC parameter settings
Wireless FC Firmware Flashing	NOT Supported
Wireless Blackbox Dwonload & Analysis	NOT Supported
Power Input	3-6S LiPo
Mounting	30.5 x 30.5mm（4mm hole size ）
Dimension	45.6mm(L) x 44mm(W) x 18.3mm(H)
Weight	34g

Dimensions

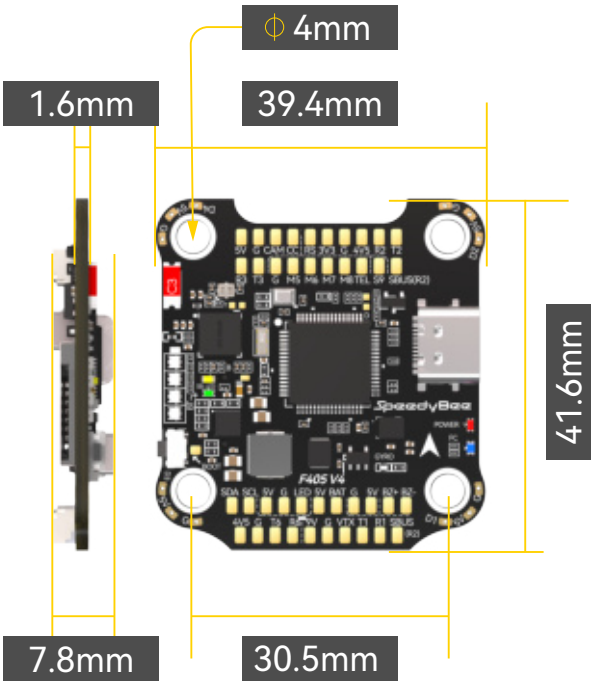
ϕ 4mm
1.6mm
39.4mm
41.6mm
7.8mm
30.5mm
F405 V4
SpeedyBee

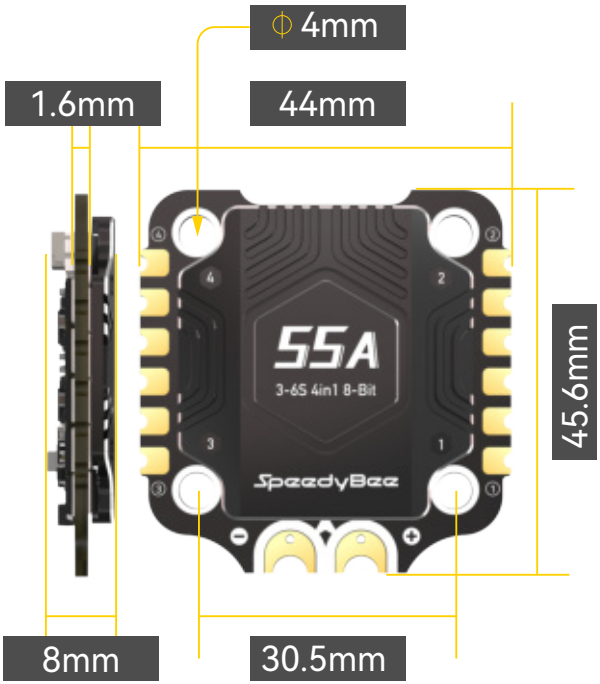
ϕ 4mm
1.6mm
44mm
45.6mm
8mm
30.5mm
55A
3-6S 4in1 8-Bit
SpeedyBee

16.1mm

Option 1 - SpeedyBee F405 V4 55A 30x30 Stack

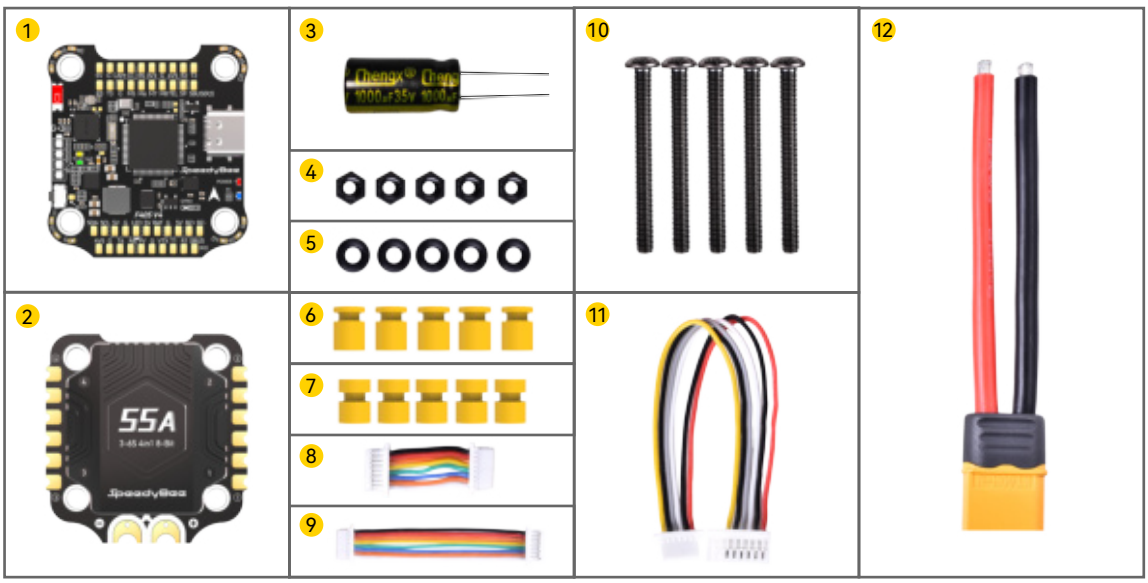

1. SpeedyBee F405 V4 Flight Controller x 1
2. SpeedyBee BLS 55A 4-in-1 ESC x 1
3. 35V 1000uF Low ESR Capacitor x 1
4. M3 Nylon Nut x 5
5. M3 silicone O Ring x 5
6. M3*8mm Silicone Grommets(for FC) x 5
7. M3*8.1mm Silicone Grommets(for ESC) x 5
8. SH 1.0mm 15mm-length 8pin Cable(for FC-ESC connection) x 1
9. SH 1.0mm 75mm-length 8pin Cable* x 1
10. M3*30mm Iner-hexagon Screws x 5
11. DJI 6pin Cable(80mm) x 1
12. XT60 Power Cable(70mm) x 1

* When the ESC tail faces the drone's front, use this cable for the flight controller and ESC; both ends plug interchangeably.

Option 2 - SpeedyBee F405 V4 Flight Controller

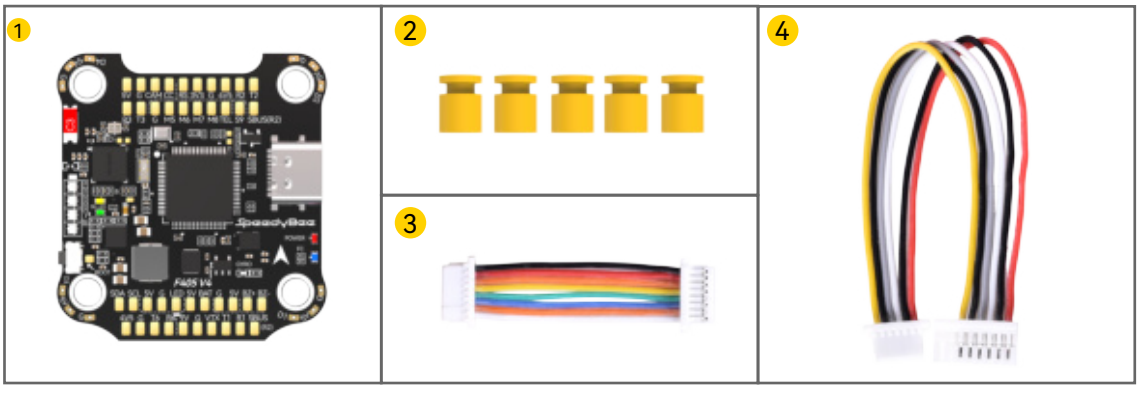

1. SpeedyBee F405 V4 Flight Controller x 1
2. M3*8mm Silicone Grommets(for FC) x 5
3. SH 1.0mm 30mm-length 8pin Cable(for FC-ESC connection) x 1
4. DJI 6pin Cable(80mm) x 1

Option 3 - SpeedyBee BLS 55A 4-in-1 ESC

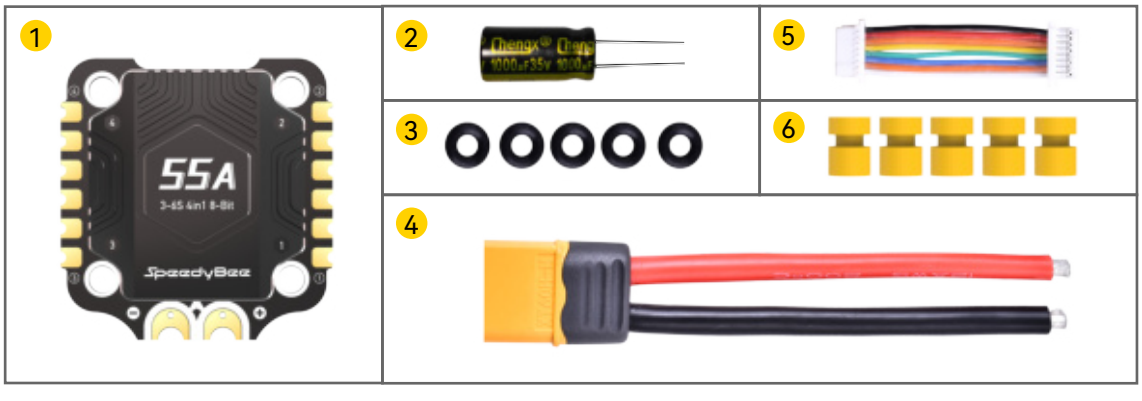

1. SpeedyBee BLS 55A 4-in-1 ESC x 1
2. 35V 1000uF Low ESR Capacitor x 1
3. M3 silicone O Ring x 5
4. XT60 Power Cable(70mm) x 1
5. SH 1.0mm 30mm-length 8pin Cable(for FC-ESC connection) x 1
6. M3*8.1mm Silicone Grommets(for ESC) x 5

Use the 8-pin cable in the package to connect the FC and the ESC.
Or solder 8 wires directly to the 8 pads on each end.

Method 1 - Using 8-pin cable

Use any end of the 8-pin JST cable to connect the FC to the ESC.

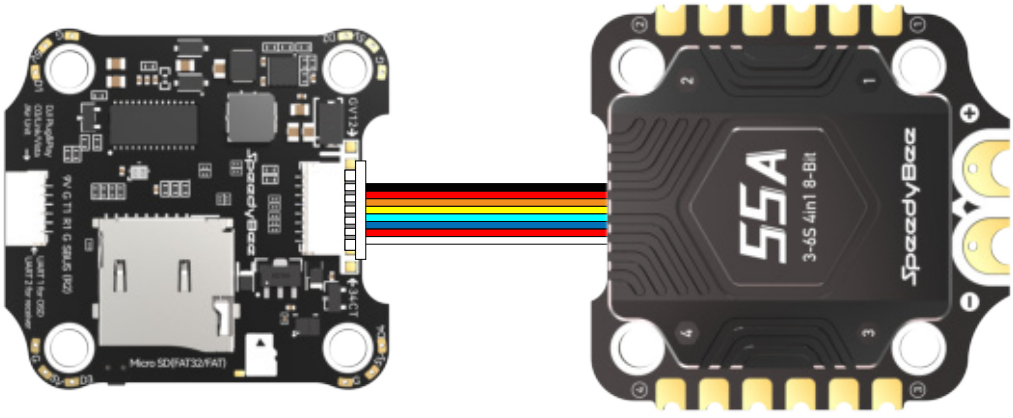

F405 V4 Flight Controller BLS 55A 4-in-1 ESC

Method 2 - Direct soldering

Solder 8 wires to the 8 pads on each end referring to the pad definition below.

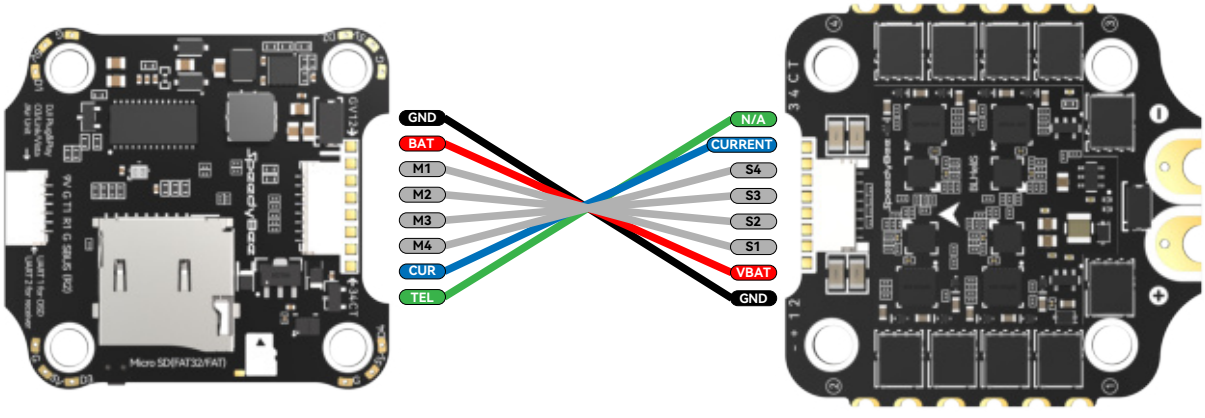

F405 V4 Flight Controller BLS 55A 4-in-1 ESC

Part 2 - F405 V4 Flight Controller

Layout

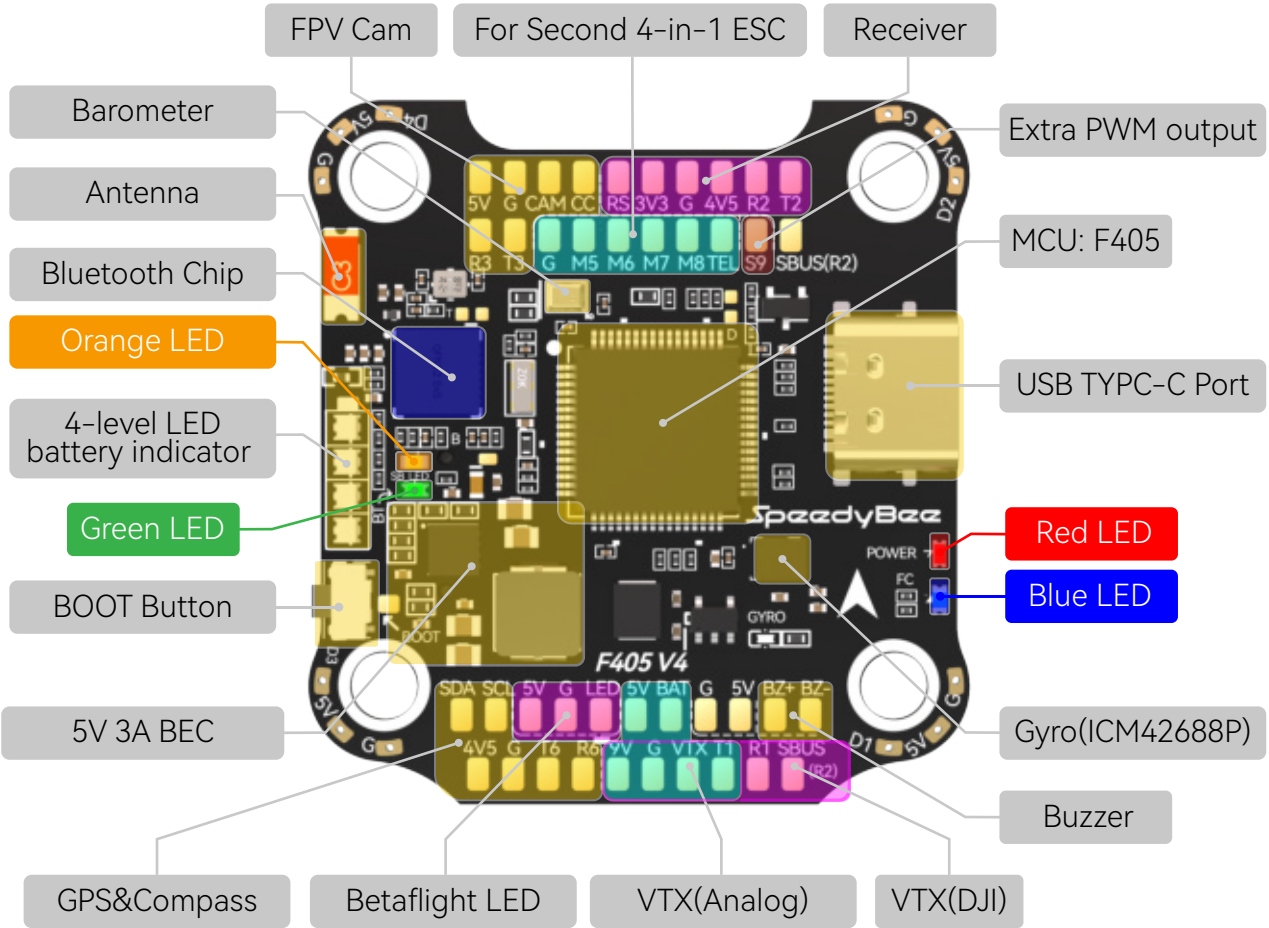

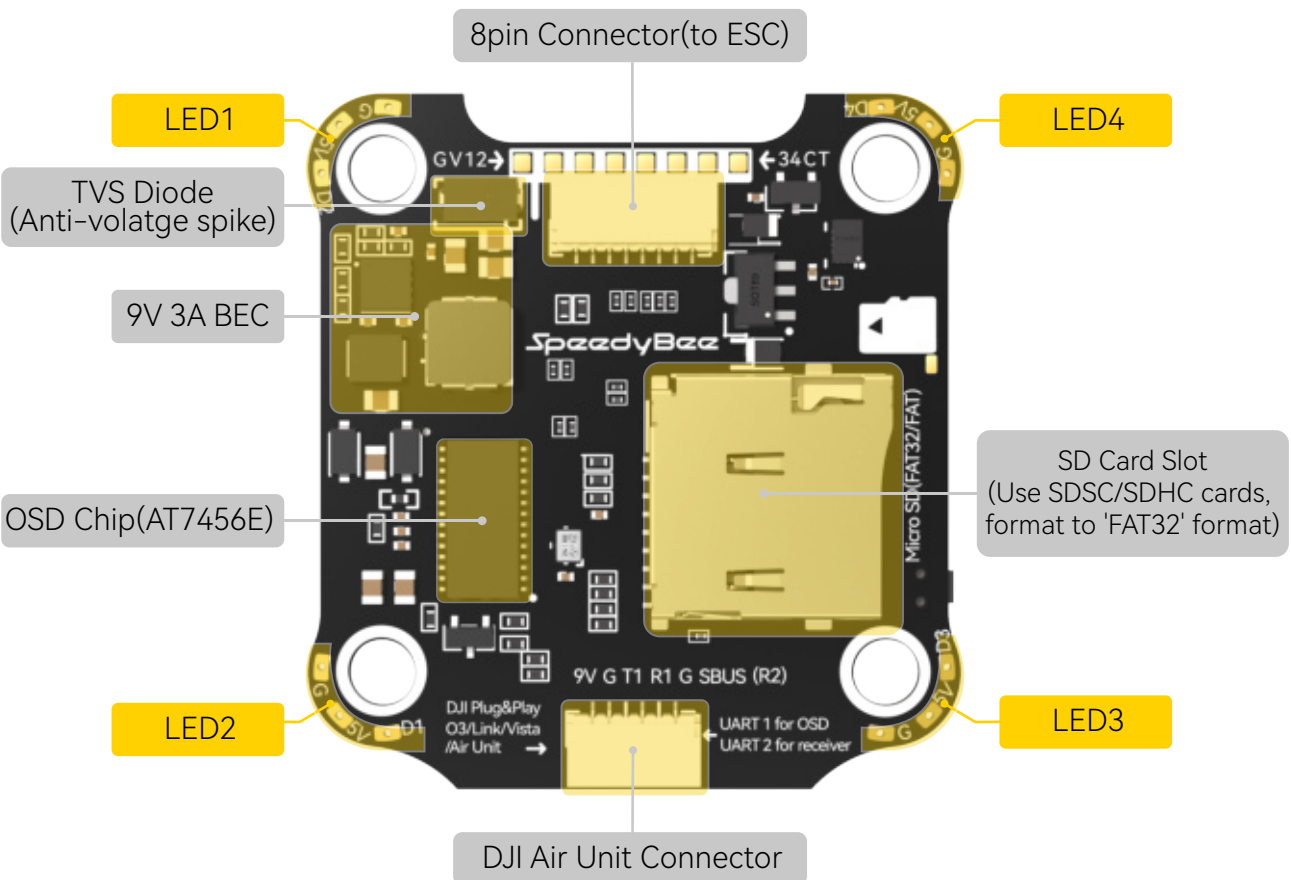

■ LED Indicator Definition

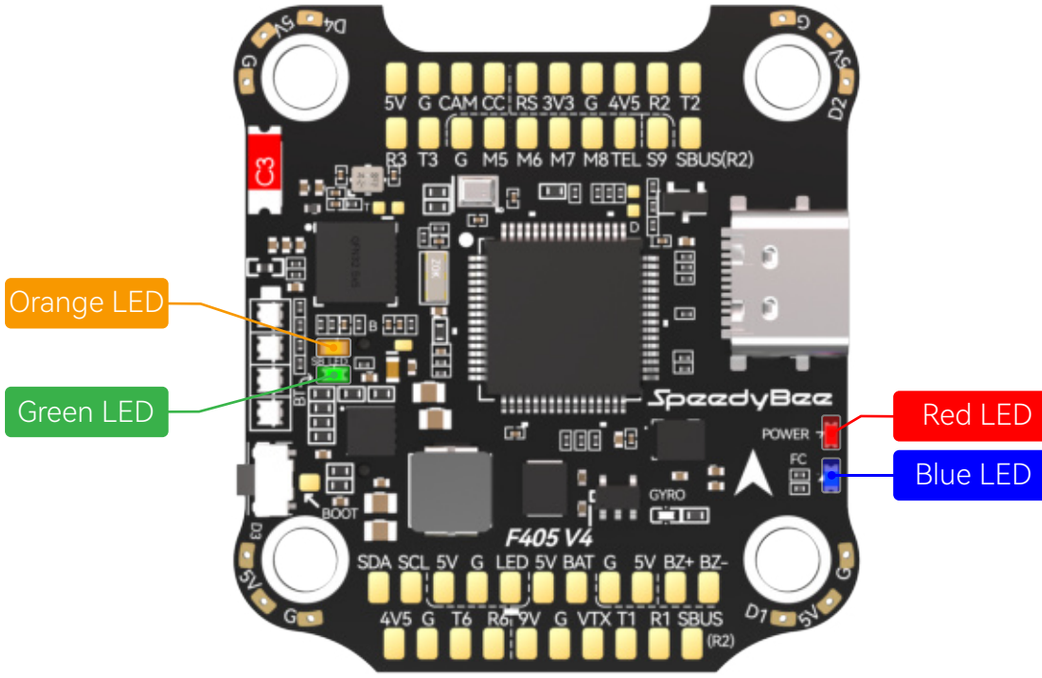

RED LED - Power Indicator.Solid Red after powering up.

GREEN LED - Bluetooth status light. Solid Green indicates Bluetooth is connected.

BLUE LED - Flight controller status light which is controlled by the flight controller firmware.

Orange LED - LED Control Mode Indicator. It indicates the 4 sets of LED strips connected to LED1-LED4 pads on the corners of the flight controller are controlled by Betaflight firmware(BF_LED mode) or the Bluetooth chip(SB_LED mode).

Solid Orange : tindicates the 4 x LEDs are in SB_LED mode. In this mode, when the FC is powered on and in standby mode, press the BOOT button to cycle the display modes of the LEDs. You could also change modes in the app wirelessly.

OFF : indicates the 4 x LEDs are controlled by Betaflight firmware.

Long press the button for 3 seconds to switch the control modes between BF_LED mode and SB_LED mode.

■ BOOT Button

[A]Only if the flight controller gets bricked and can't power up, please follow these steps to re-flash firmware for it:

① Insert a USB A to TYPE-C cable to your PC.

② Press and hold the BOOT button, insert the USB cable into the flight controller, then release the BOOT button.

③ Open Betaflight/Emuflight/INAV configurator on the PC, go to the 'Firmware Flashing' page, choose the target 'SPEEDYBEEF405V4' and flash.

[B]. When the FC is powered on and in standby mode, the BOOT button can be used to control the LED strips connected to LED1-LED4 pads on the corners. Short-press the BOOT button to cycle the LED displaying mode. Long-press the BOOT button to switch between SpeedyBee-LED mode and BF-LED mode. Under BF-LED mode, all the LED1-LED4 strips will be controlled by the Betaflight firmware.

The default mode is BF-LED mode.

FC's Peripheral Connection

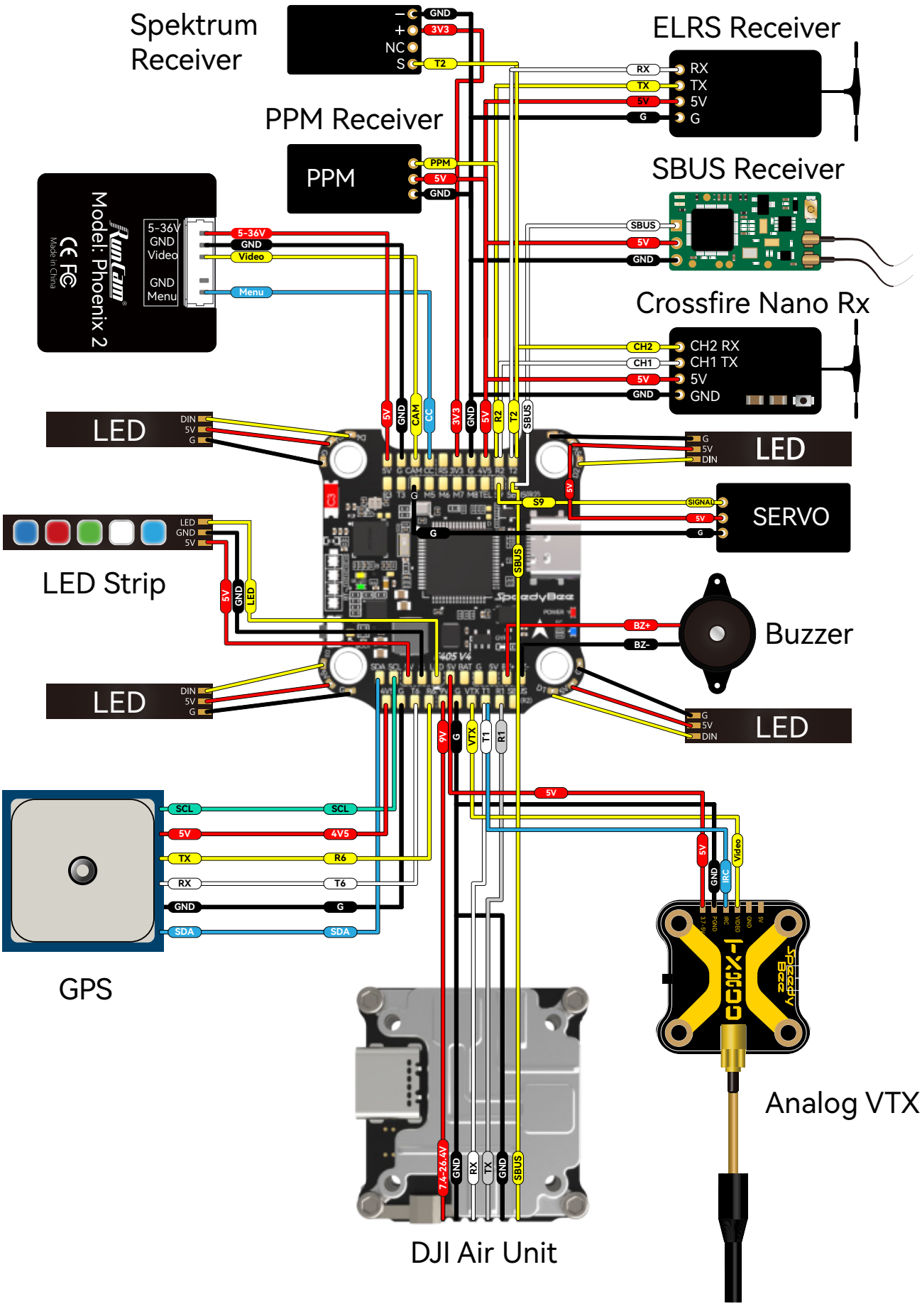

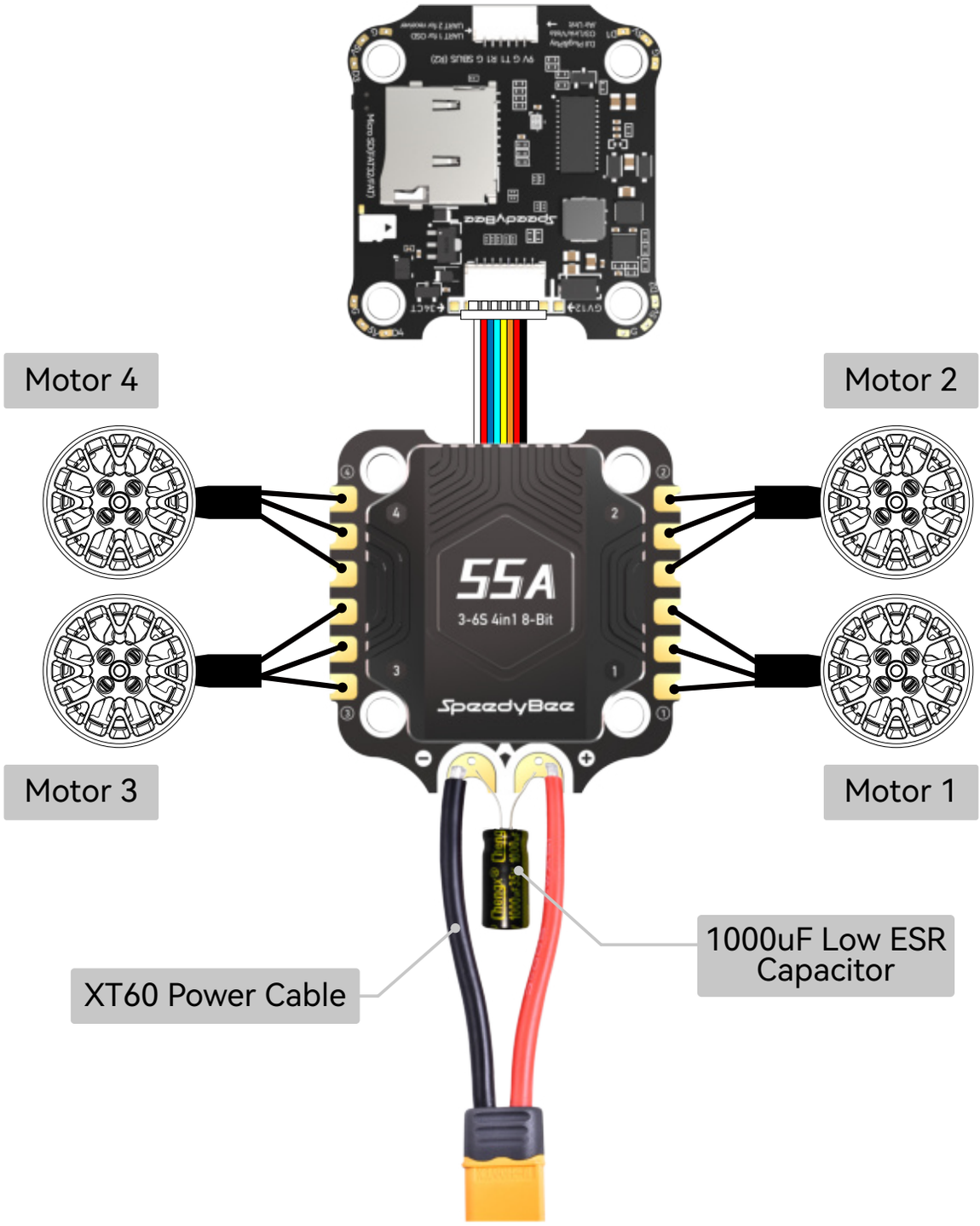

Note1: In order to prevent the stack from being burnt out by voltage spikes on powering up, it is strongly recommended to use the Low ESR capacitor in the package.

Note2: The FC and ESC can also connected via direct soldering. Soldering pads definition is as follows.

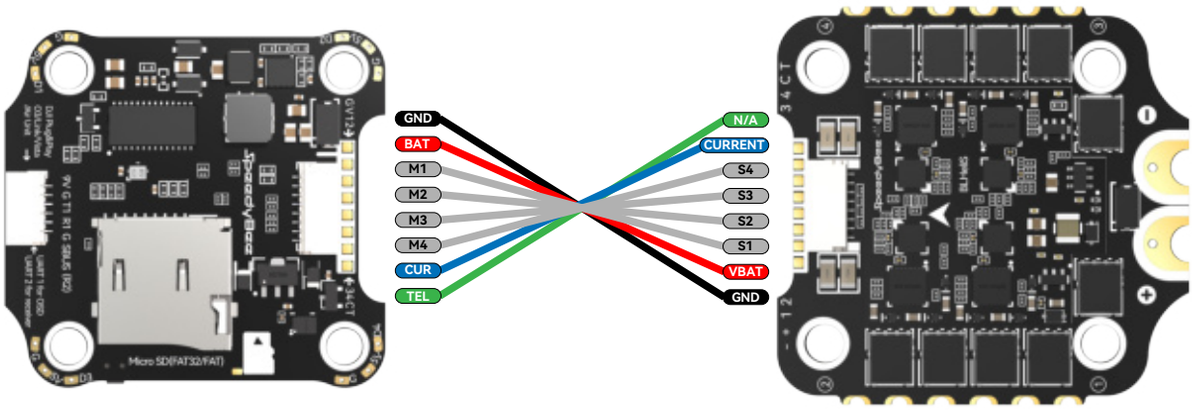

F405 V4 Flight Controller

BLS 55A 4-in-1 ESC

Cable Connection vs DJI O3 Air Unit

Use 6-pin cable comes with the O3 Air Unit

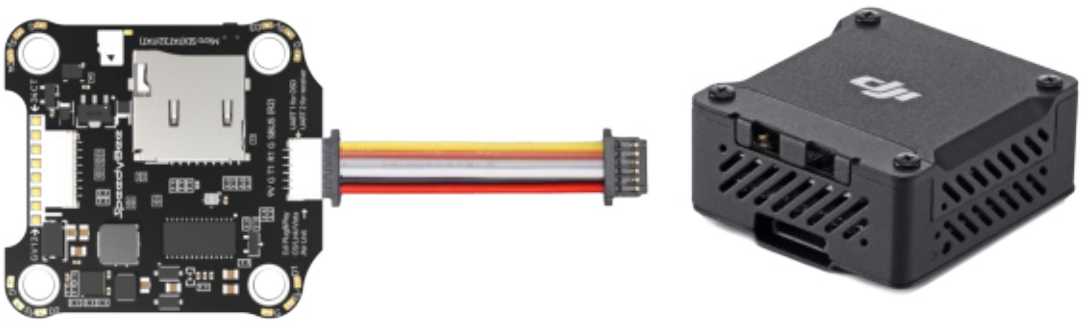

Cable Connection vs RunCam Link/ Caddx Vista Air Unit

Use 6-pin cable comes with the F405 V4 stack
(See the accessory No.11 in the package section)

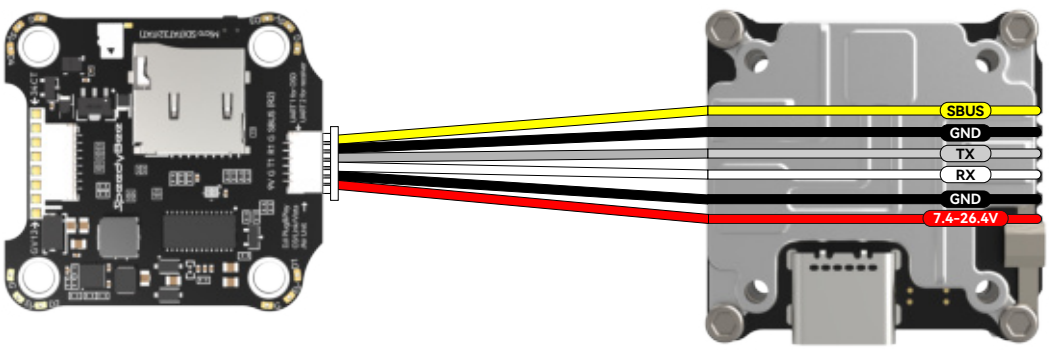

Cable Connection vs DJI Air Unit V1

Use 6-pin cable comes with the F405 V4 stack
(See the accessory No.11 in the package section)

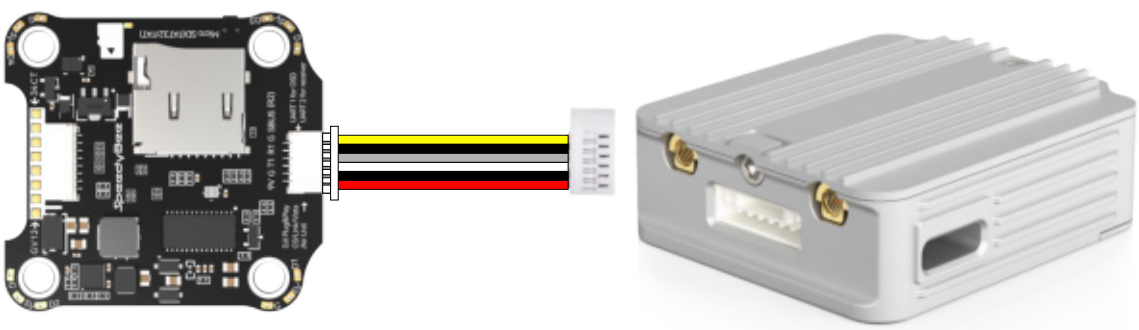

Importance notice for SBUS receiver

When using an SBUS receiver, the SBUS signal wire of the receiver must be connected to the SBUS pad on the front side of the flight controller (this pad internally uses UART2).

If you are also using the DJI Air Unit(O3/Link/Vista/Air Unit V1), you will need to disconnect the SBUS signal wire from the Air Unit harness. Failure to do so will prevent the SBUS receiver from being properly recognized by the flight controller. You can use tweezers to pick out the SBUS wire from the 6-pin harness connector (or directly cut this wire) and insulate the exposed part of the wire carefully.

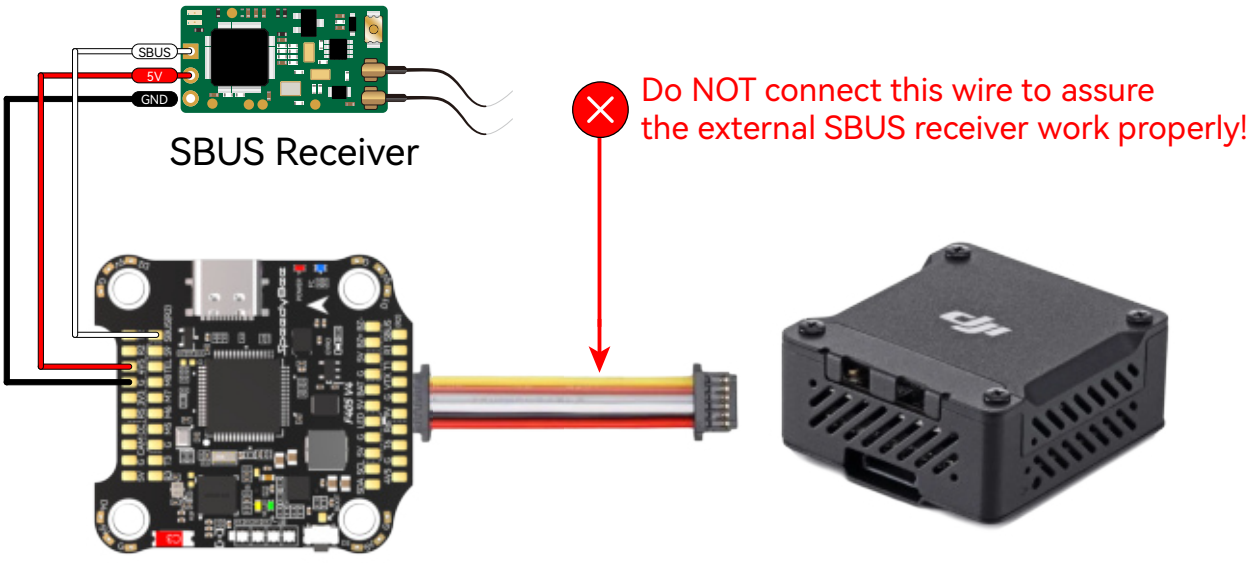

F405 V4 Flight Controller

DJI O3/Vista/Link/Air Unit V1

Importance notice for ELRS receiver

We recommend connecting the ELRS receiver's TX and RX to the T2 and R2 pads on the flight controller. However, when using the DJI Air Unit simultaneously, some ELRS receivers may not be recognized properly by the flight controller. If you encounter this issue, you need to disconnect the SBUS signal wire from the Air Unit harness. You can use tweezers to pick out the SBUS wire from the 6-pin harness connector (or directly cut this wire) and insulate the exposed part of the wire carefully.

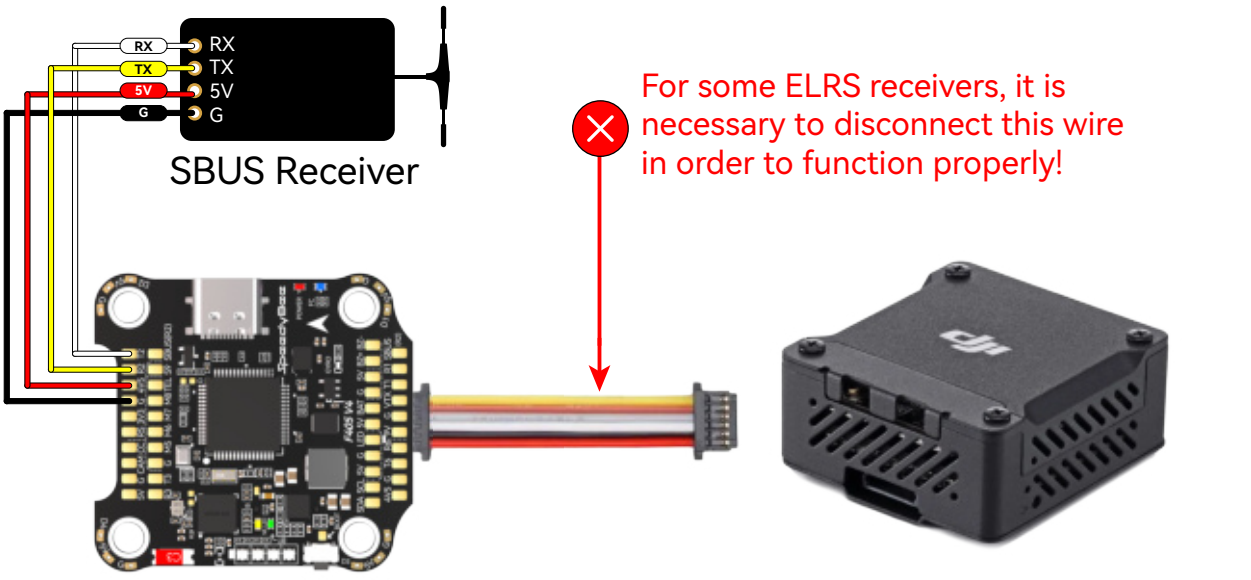

F405 V4 Flight Controller

DJI O3/Vista/Link/Air Unit V1

■ Get the SpeedyBee App

Search ‘SpeedyBee’ on Google Play or App Store. Or download the Android .apk file on our website: https://www.speedybee.com/download.

■ FC Configuration

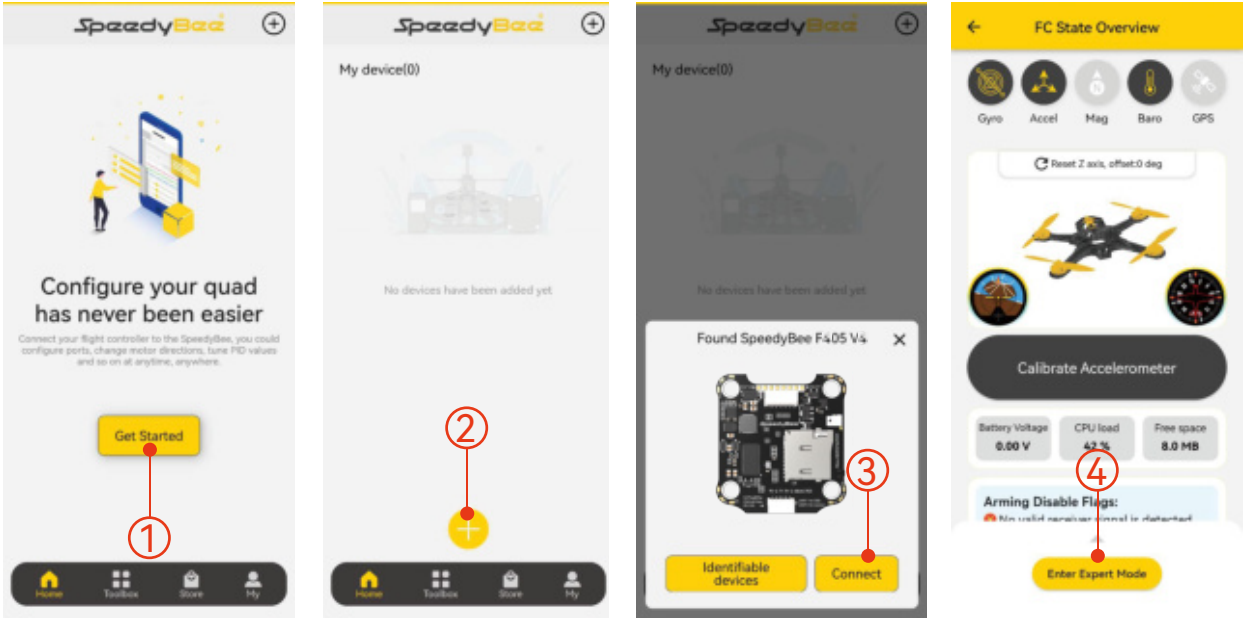

SpeedyBee F405 V4 flight controller does not support wireless firmware flashing, so please flash firmware for it on your PC following the steps below:

① Connect the flight controller to the PC with a USB cable
② Open Betafight/ INAV configurator on your PC. Take Betaflight configurator as an example, go to the 'Firmware Flashing' page, choose the target '**SPEEDYBEEF405V4**' and flash.

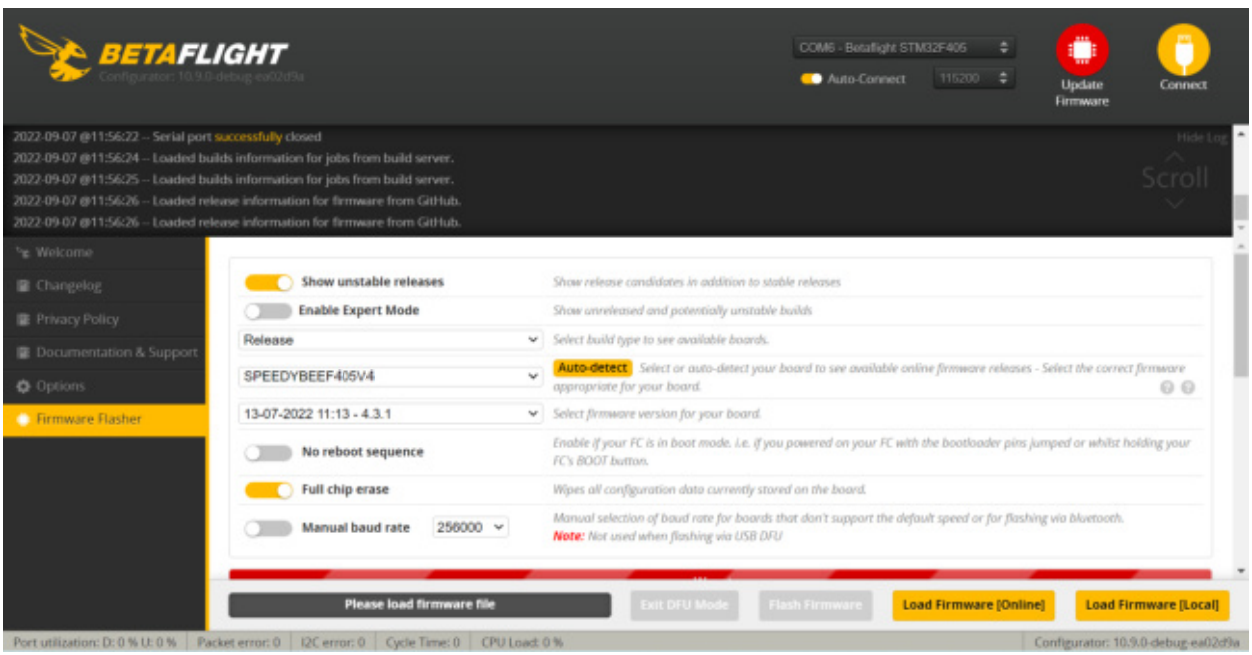

Specifications

Product Name	SpeedyBee F405 V4 30x30 Flight Controller
MCU	STM32F405
IMU(Gyro)	ICM42688P
USB Port Type	Type-C
Barometer	Built-in
OSD Chip	AT7456E chip
BLE Bluetooth	Supported. Used for Flight Controller configuration (MSP should be enabled with Baud rate 115200 on UART4)
WIFI	Not supported
DJI Air Unit Connection Way	Two ways supported: 6-pin connector or direct soldering.
6-pin DJI Air Unit Plug	Supported. Completely compatible with DJI O3/RunCam Link/Caddx Vista/DJI Air Unit V1, no wire is needed to be changed.
Blackbox MicroSD Card Slot	*Betaflight firmware requires the type of the microSD card to be either Standard (SDSC) or High capacity (SDHC) under 32GB, so extended capacity cards (SDXC) are not supported (Many high-speed U3 cards are SDXC). Also the microSD card MUST be formatted with the FAT16 or FAT32 (recommended) format. So, you could use any SD card less than 32GB, but the Betaflight can only recognize 4GB maximum. We suggest you use this 3rd party formatting tool and choose 'Overwrite format' then format your card. Also check out here for the recommended SD cards or buy the tested cards from our store.
Current Sensor Input	Supported. For SpeedyBee BLS 55A ESC, please set scale = 400 and Offset = 0.
Power Input	3S - 6S Lipo(Through G, BAT pins/pads from the 8-pin connector or 8-pads on the bottom side)
5V Output	9 groups of 5V output, four +5V pads and 1 BZ+ pad(used for Buzzer) on front side, and 4x LED 5V pads. The total current load is 3A.
9V Output	2 groups of 9V output, one +9V pad on front side and other included in a connector on bottom side. The total current load is 3A.
3.3V Output	Supported. Designed for 3.3V-input receivers. Up to 500mA current load.
4.5V Output	Supported. Designed for receiver and GPS module even when the FC is powered through the USB port. Up to 1A current load.
ESC Signal	M1 - M4 on bottom side and M5-M8 on front side.
UART	6 sets(UART1, UART2, UART3, UART4(Dedicated for Bluetooth connection)), UART5 (Dedicated for ESC telemetry),UART6
ESC Telemetry	UART R5(UART5)
I2C	Supported. SDA & SCL pads on front side. Used for magnetometer, sonar, etc.
Traditional Betaflight LED Pad	Supported. 5V, G and LED pads on bottom of the front side. Used for WS2812 LED controlled by Betaflight firmware.
Buzzer	BZ+ and BZ- pad used for 5V Buzzer
BOOT Button	Supported.
	[A]. Press and hold BOOT button and power the FC on at the same time will force the FC to enter DFU mode, this is for firmware flashing when the FC gets bricked.
	[B]. When the FC is powered on and in standby mode, the BOOT button can be used to controller the LED strips connected to LED1-LED4 connectors on the bottom side. By default, short-press the BOOT button to cycle the LED displaying mode. Long-press the BOOT button to switch between SpeedyBee-LED mode and BF-LED mode. Under BF-LED mode, all the LED1-LED4 strips will be controlled by Betaflight firmware.
RSSI Input	Supported. Named as RS on the front side.
Smart Port / F.Port	Not supported
Supported Flight Controller Firmware	BetaFlight(Default), INAV
Firmware Target Name	SPEEDYBEEF405V4
Mounting	30.5 x 30.5mm(4mm hole diameter)
Dimension	41.6(L) x 39.4(W) x 7.8(H)mm
Weight	10.5g

Part 3 - SpeedyBee BLS 55A 4-in-1 ESC

Layout

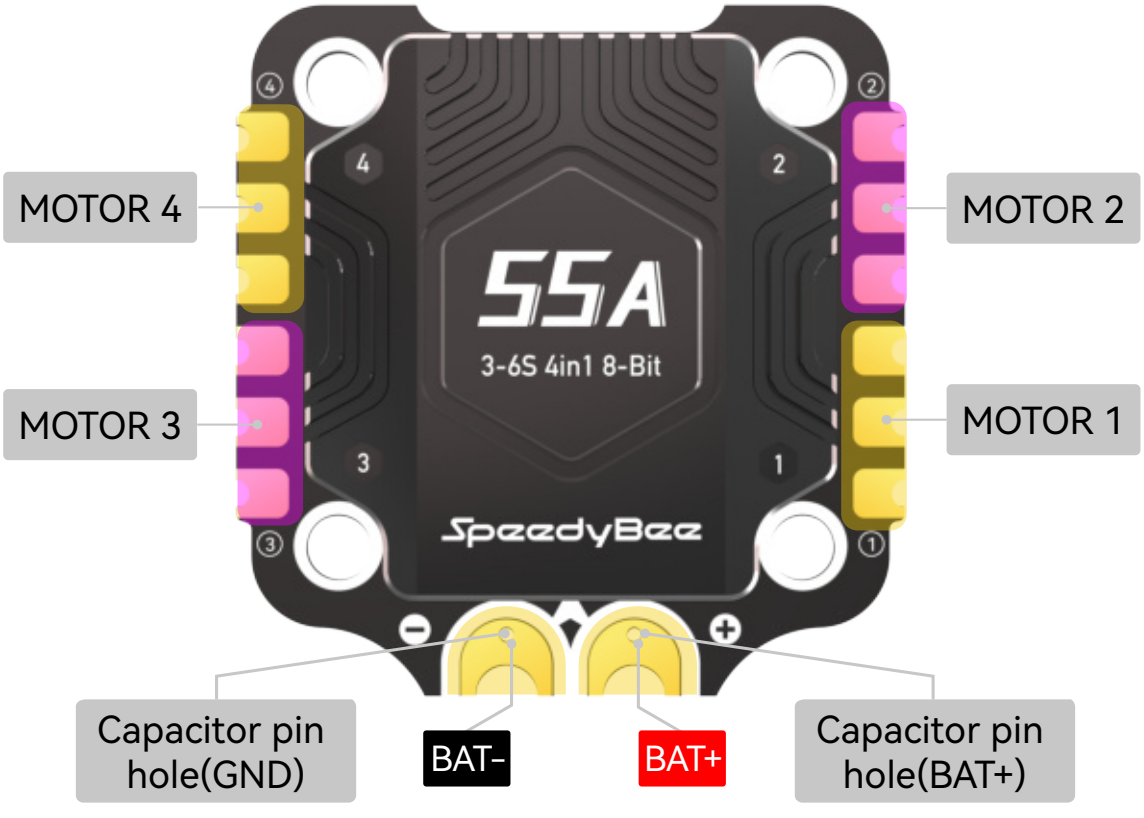

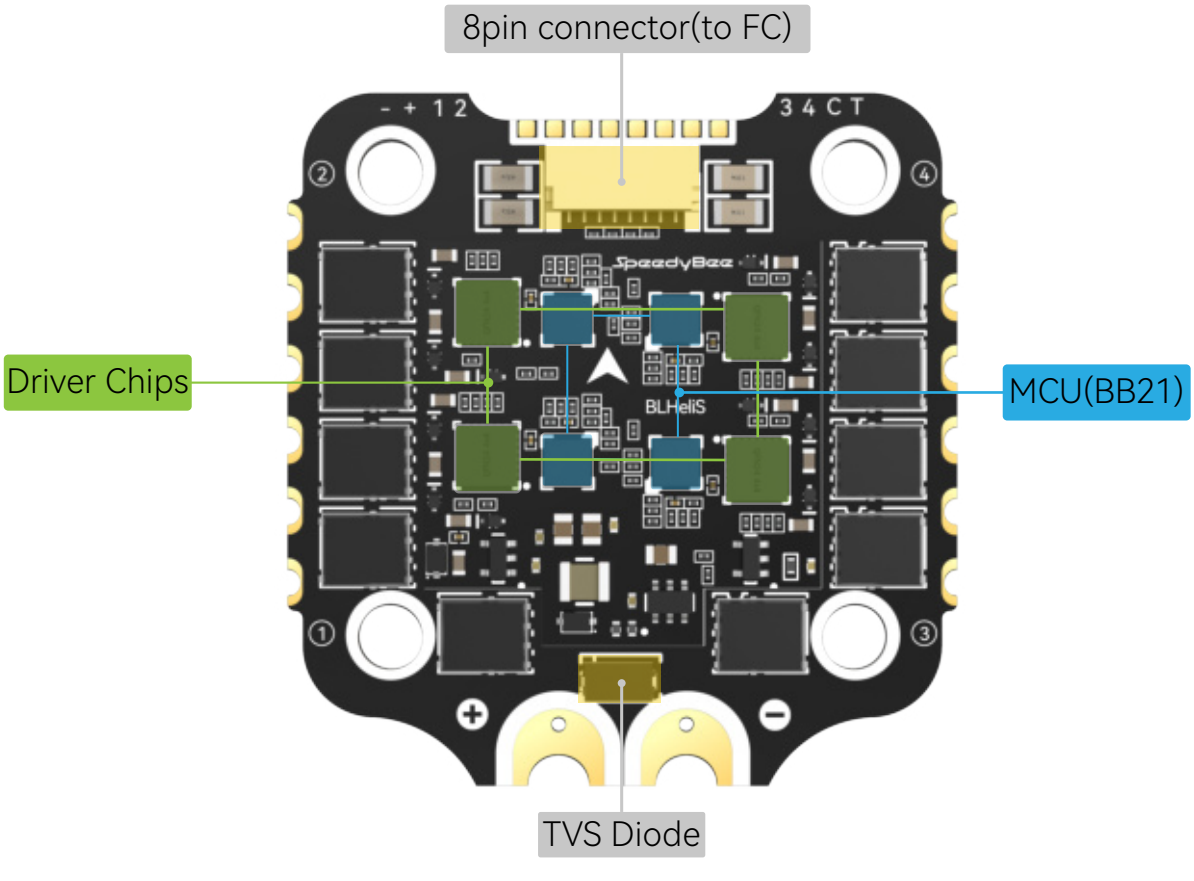

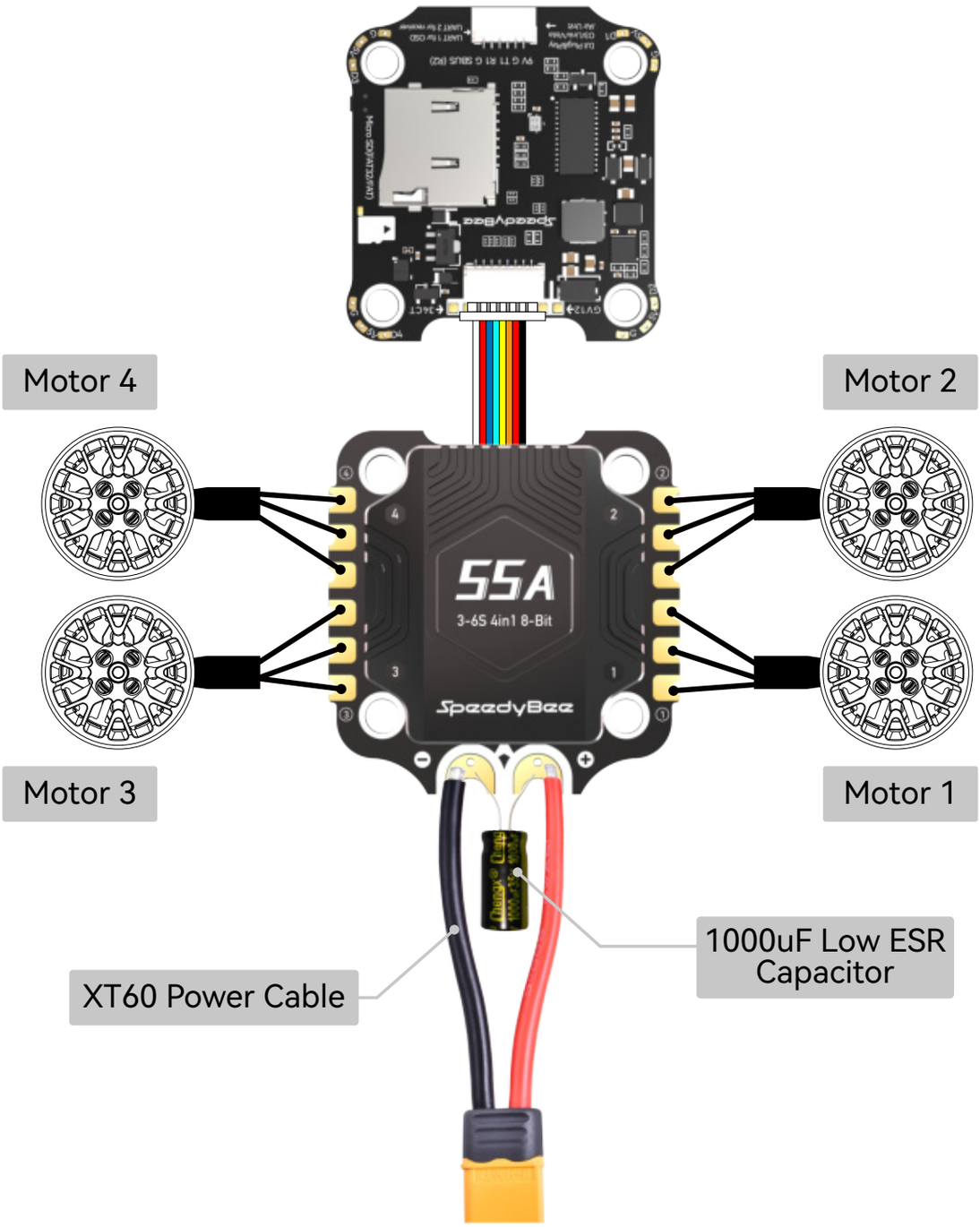

Note1: In order to prevent the stack from being burnt out by voltage spikes on powering up, it is strongly recommended to use the Low ESR capacitor in the package.

Note2: The FC and ESC can also connected via direct soldering. Soldering pads definition is as follows.

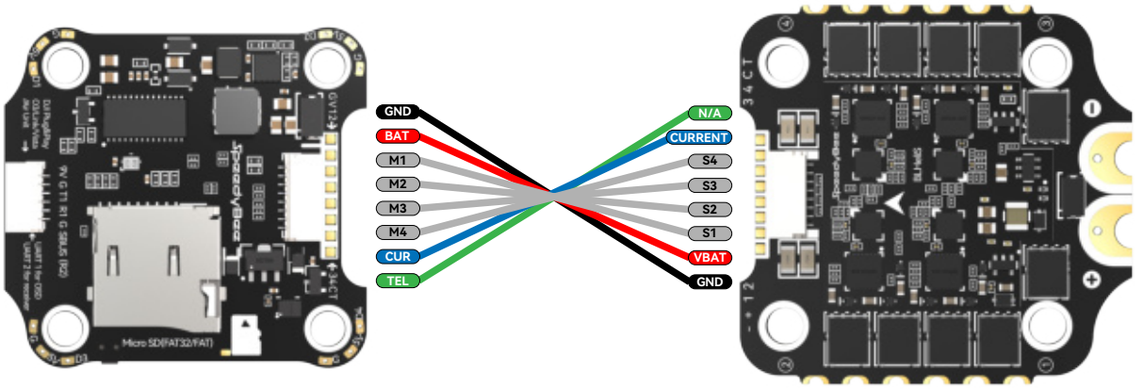

F405 V4 Flight Controller

BLS 55A 4-in-1 ESC

ESC Configuration

- You could use the SpeedyBee APP to configure this ESC wirelessly for both BLHeli_S or Bluejay firmware. Steps:

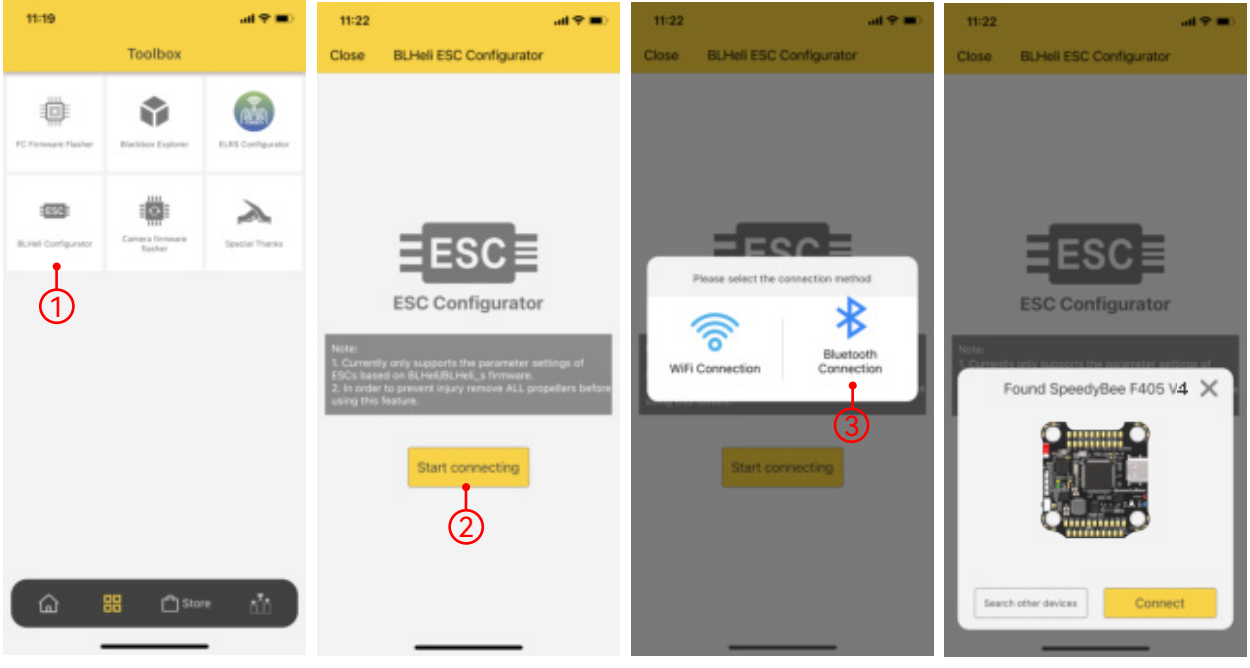

- You could also use PC configurators to configure this ESC. We recommend the ESC Configurator. Please use Google Chrome browser and visit: http://www.esc-configurator.com.

■ This 8-bit 55A ESC can run BLHeliS or Bluejay firmware. It is loaded with BLHeliS firmware by default. You could also flash it to Bluejay firmware which can support RPM filtering and Bi-directional Dhsot.

Firmware flashing steps are as follows:

- Remove all the propellers from your drone.
- Ensure that the flight controller is connected properly to the ESC, then power up the drone. This step ensures that the ESC starts up correctly.
- Connect the flight controller to the computer using a USB Type-C cable.
- Open the Chrome browser and visit the following website: https://www.esc-configurator.com/
- Follow the firmware flashing steps as shown in the screenshots below.

Important note:

On the 6th interface, the "ESC" type must be selected as "J-H-40".

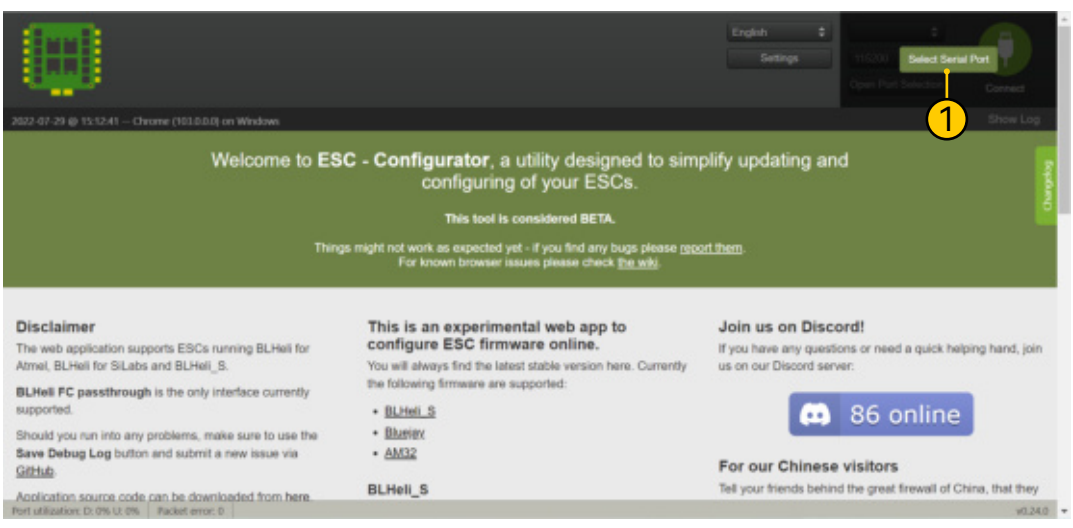

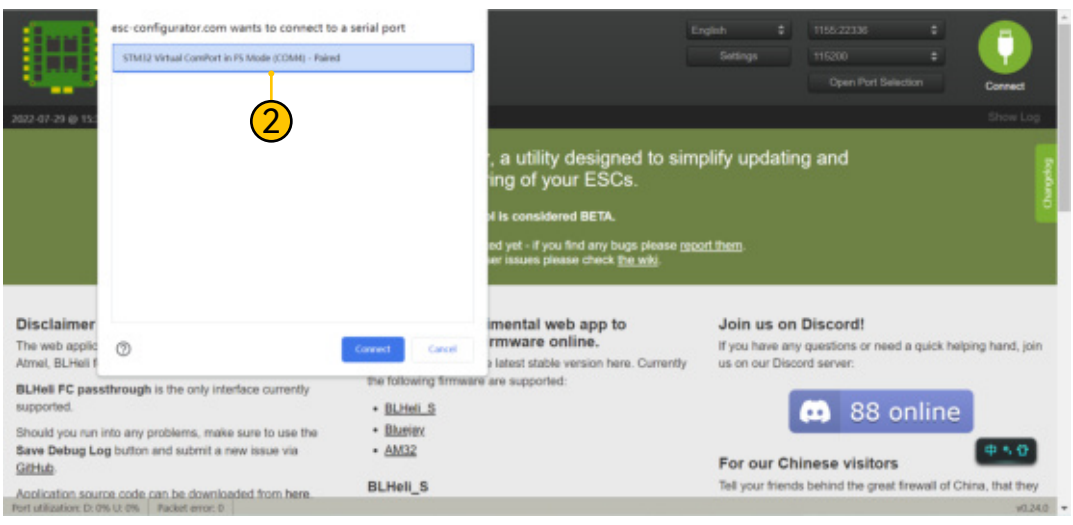

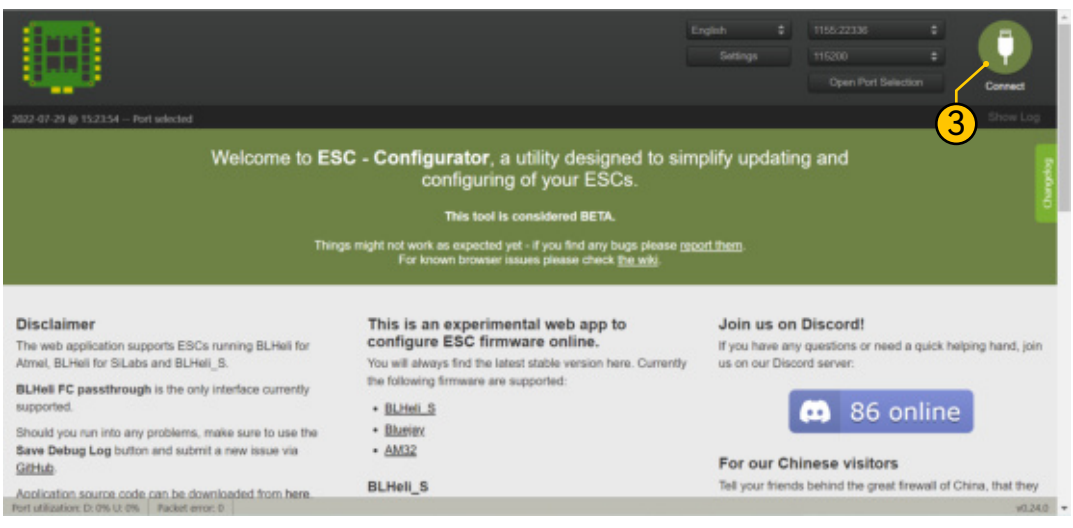

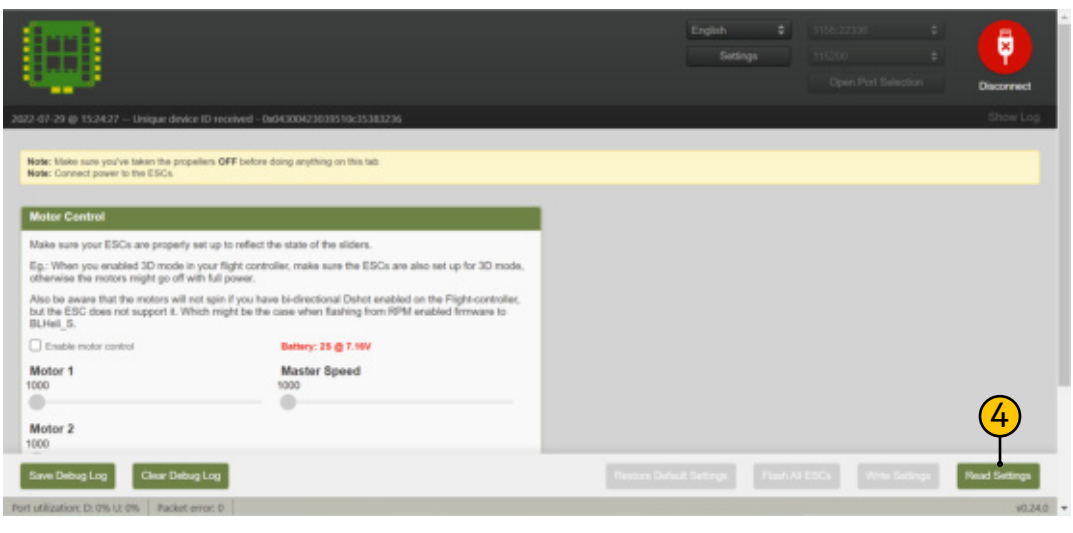

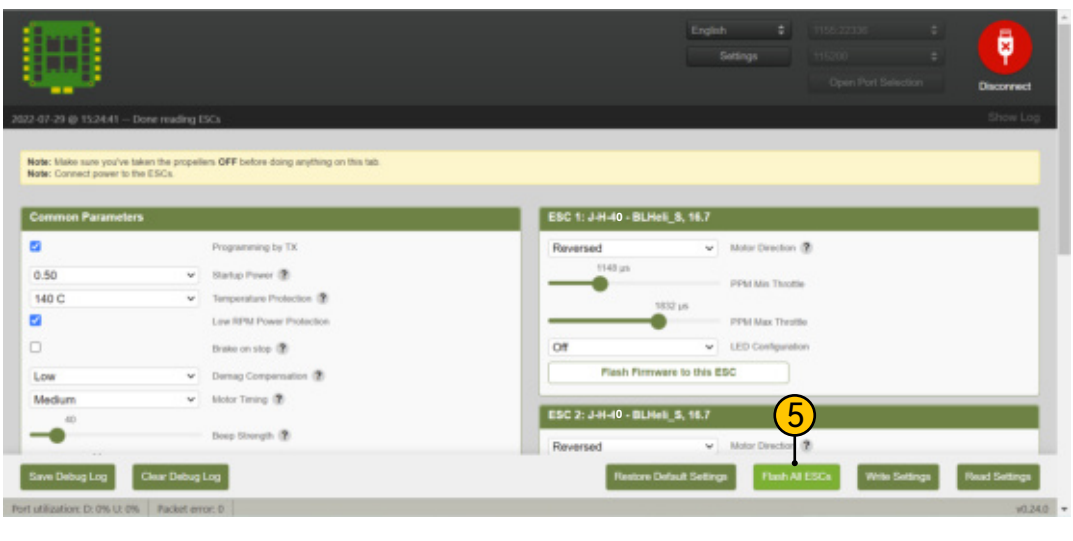

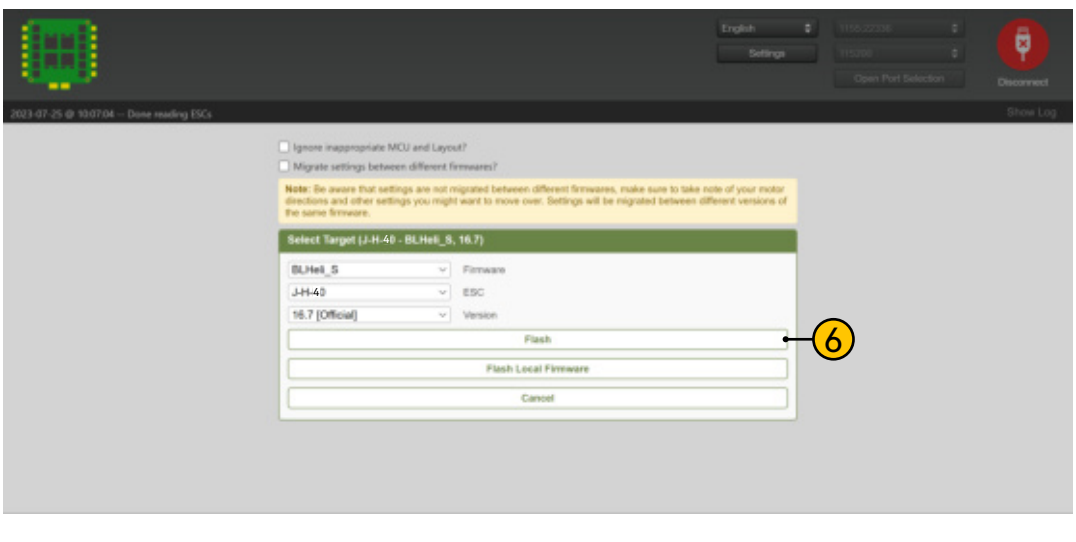

Specifications

Product Name	**SpeedyBee BLS 55A 30x30 4-in-1 ESC**
Firmware	BLHeli_S J-H-40
Wireless Configuration	Full Configuration Supported in the SpeedyBee app
PC Configurator Download Link	https://esc-configurator.com/
Continuous Current	55A * 4
Burst Current	70(10 seconds)
TVS Protective diode	Yes
External Capacitor	1000uF Low ESR Capacitor(In the package)
ESC Protocol	DSHOT300/600
Power Input	3-6S LiPo
Power Output	VBAT
Current Sensor	Support (Scale=400 Offset=0)
ESC Telemetry	Not supported
Mounting	30.5 x 30.5mm(4mm hole diameter)
Dimension	45.6(L) * 44(W) *8mm(H)
Weight	23.5g