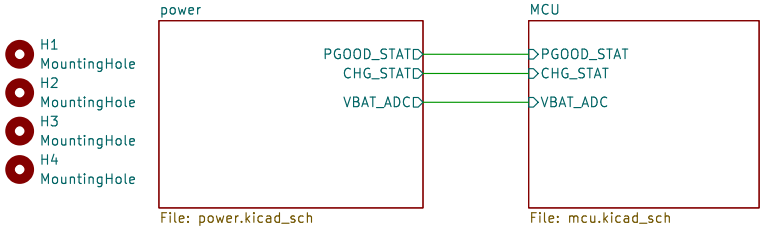

Designer: Maxwell Khor

Sheet: /
File: adhdv1.00.kicad_sch

Title: ADHD MEDICATION REMINDER SYSTEM

Size: A5	Date: 2026-03-13	**Rev: B**
KiCad E.D.A. 9.0.7		Id: 1/3

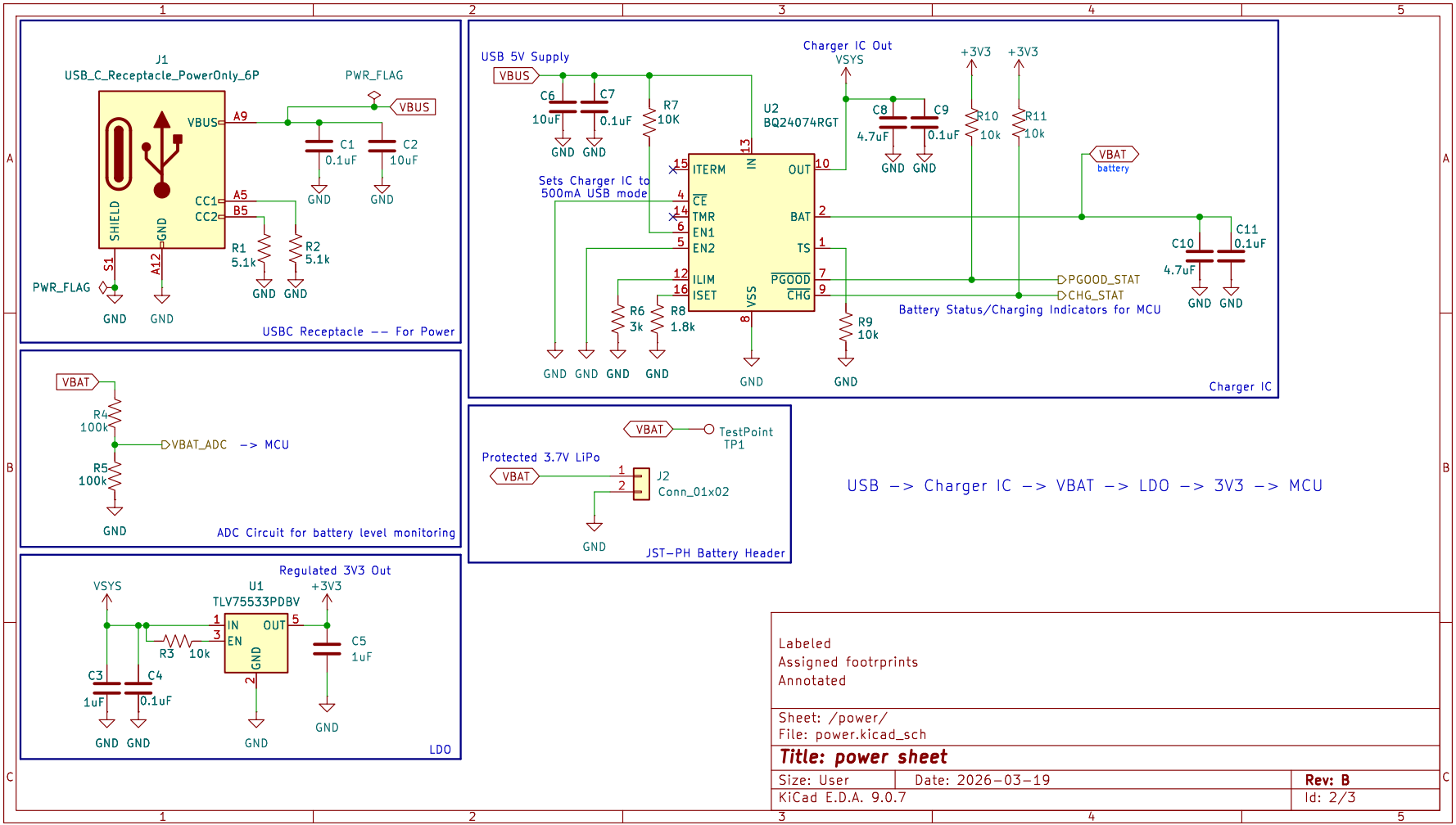
J1
USB_C_Receptacle_PowerOnly_6P
PWR_FLAG
VBUS
A9
C1
0.1uF
C2
10uF
CC1
CC2
A5
B5
R1
5.1k
R2
5.1k
SHIELD
GND
A12
S1
GND
USBC Receptacle -- For Power
USB 5V Supply
C6
10uF
C7
0.1uF
R7
10K
U2
BQ24074RGT
Charger IC Out
VSYS
C8
4.7uF
C9
0.1uF
+3V3
R10
10k
R11
10k
VBAT
battery
Sets Charger IC to
500mA USB mode
ITERM
CE
TMR
EN1
EN2
ILIM
ISET
IN
OUT
BAT
TS
PGOOD
CHG
VSS
PGOOD_STAT
CHG_STAT
Battery Status/Charging Indicators for MCU
C10
4.7uF
C11
0.1uF
R6
3k
R8
1.8k
R9
10k
Charger IC
R4
100k
R5
100k
VBAT_ADC -> MCU
ADC Circuit for battery level monitoring
TestPoint
TP1
Protected 3.7V LiPo
J2
Conn_01x02
JST-PH Battery Header
USB -> Charger IC -> VBAT -> LDO -> 3V3 -> MCU
Regulated 3V3 Out
VSYS
U1
TLV75533PDBV
+3V3
IN
EN
OUT
GND
R3
10k
C3
1uF
C4
0.1uF
C5
1uF
LDO
Labeled
Assigned footprints
Annotated
Sheet: /power/
File: power.kicad_sch
Title: power sheet
Size: User
Date: 2026-03-19
Rev: B
KiCad E.D.A. 9.0.7
Id: 2/3

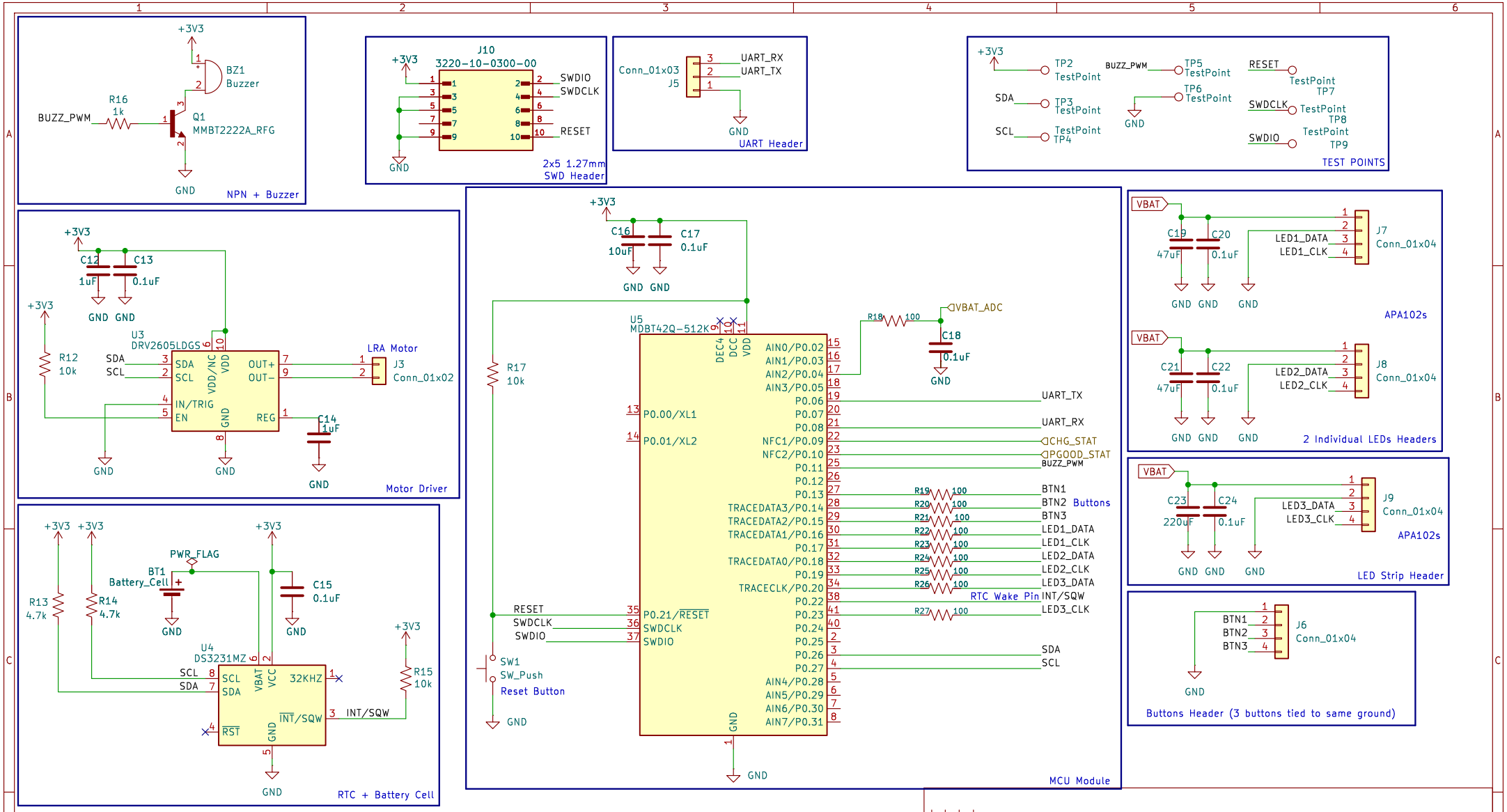

Labeled
Assigned footprints
Fixed LED Routing

Sheet: /MCU/
File: mcu.kicad_sch

Title: Microcontroller & Connectors

Size: User	Date: 2026-03-19	Rev: C
KiCad E.D.A. 9.0.7		Id: 3/3