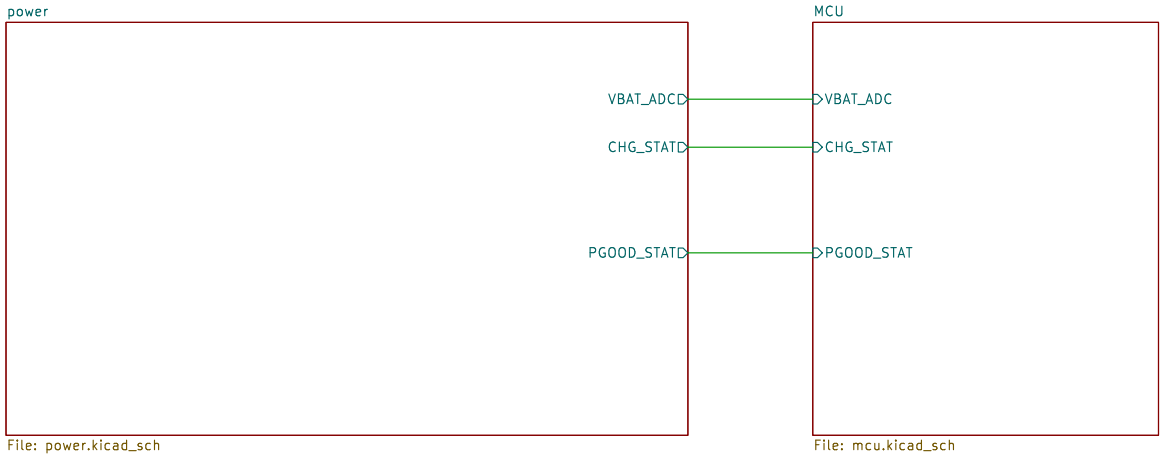

Designer: Maxwell Khor

Sheet: /
File: adhdv1.00.kicad_sch

Title: ADHD MEDICATION REMINDER SYSTEM

Size: A4	Date: 2026-03-13	**Rev: B**
KiCad E.D.A. 9.0.7		Id: 1/3

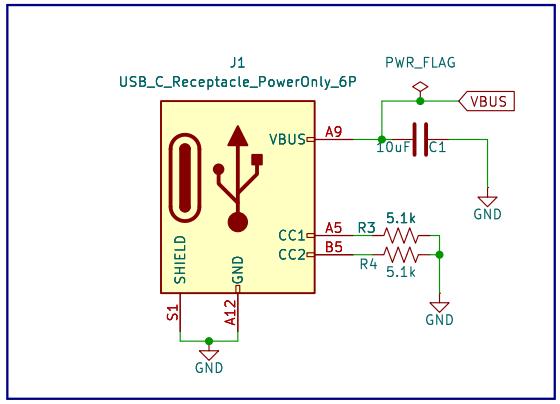

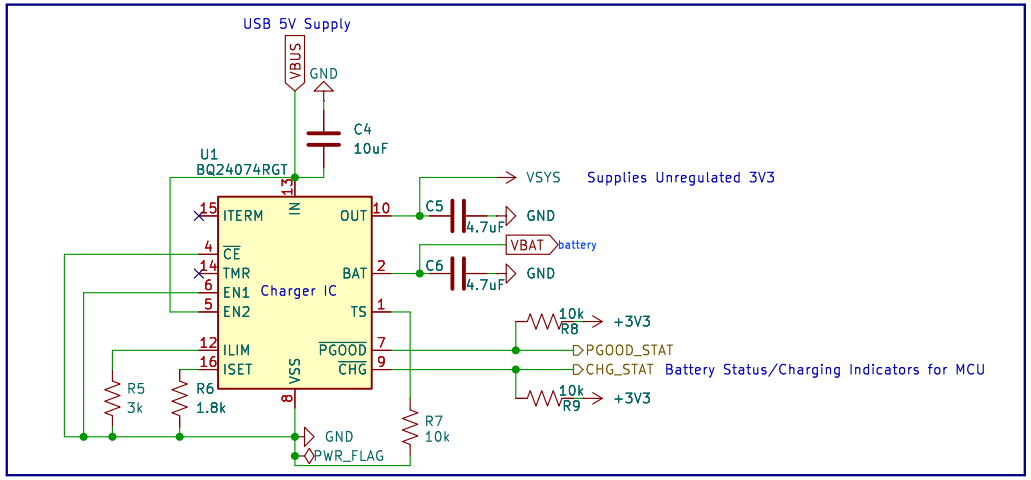

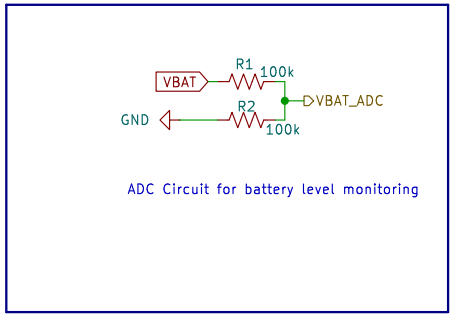

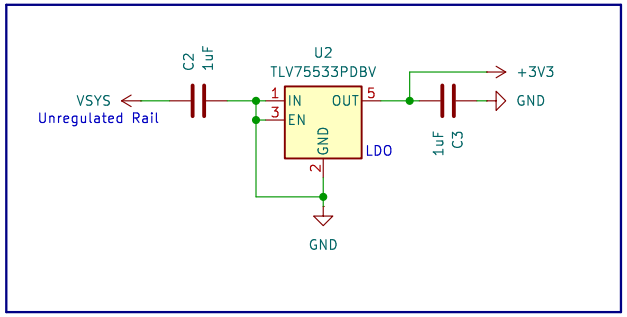

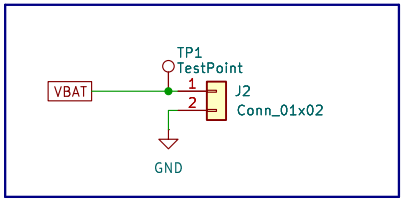

Assigned footprints
Annotated

Sheet: /power/
File: power.kicad_sch

Title: power sheet

Size: A4	Date: 2026-03-13	Rev: B
KiCad E.D.A. 9.0.7		Id: 2/3

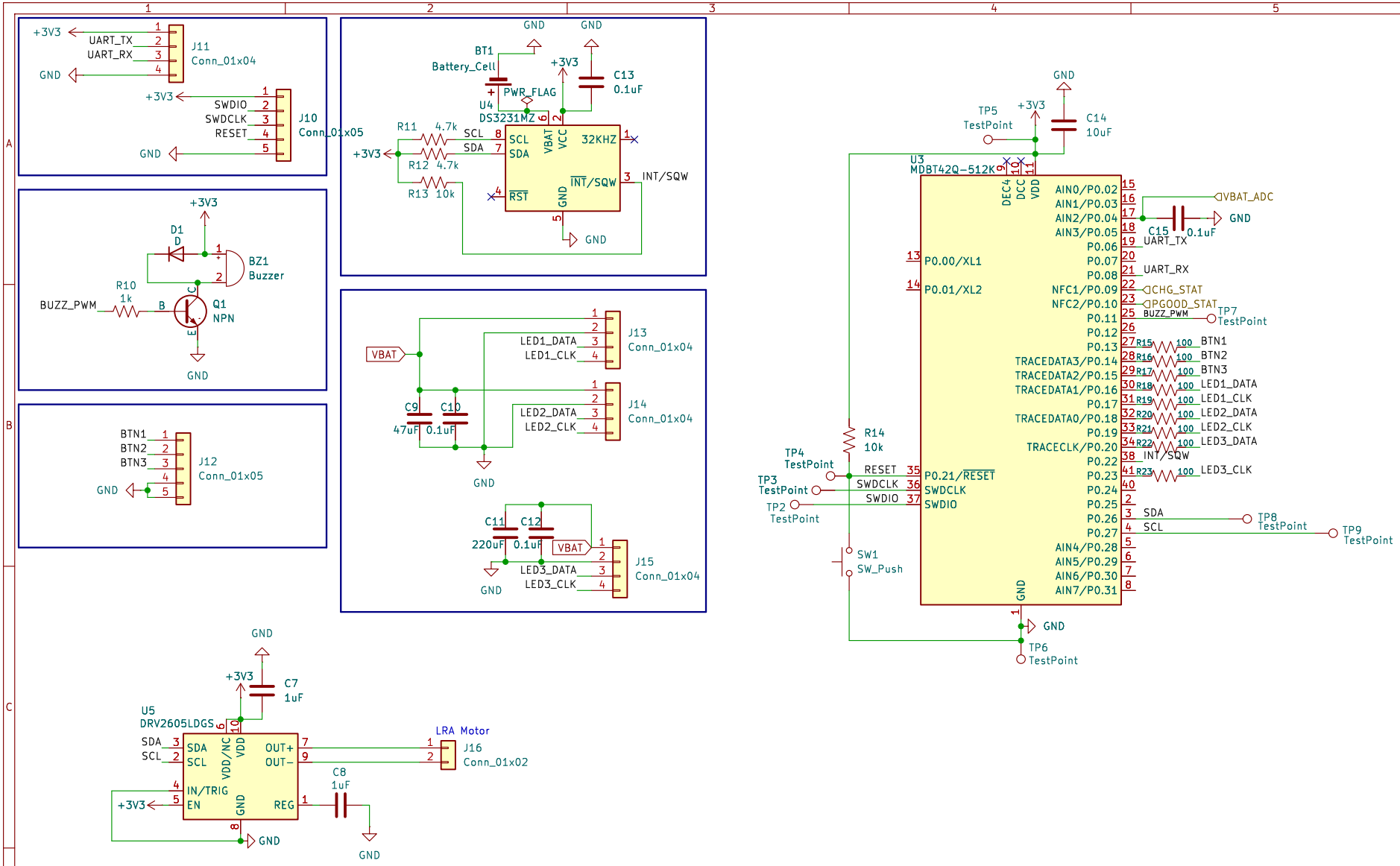

Assigned footprints
Fixed LED Routing

Sheet: /MCU/
File: mcu.kicad_sch

Title: Microcontroller & Connectors

Size: A4	Date: 2026-03-13	Rev: B
KiCad E.D.A. 9.0.7		Id: 3/3