University of Toronto
Faculty of Applied Science and Engineering
ECE 295
Written Document 1 (WD1)

Team #	4F2	Date	February 9th, 2025

Project Title	Written Document 1
Tutorial Section	0105
Communication Instructor	Faye D'Silva
Prepared By (Names and Student #s of Team Members)	Leo Stewart 1011228011 Mayan Saravanabavan 1010900811 Muhammad Waquas 1011129976

Own Work Declaration: We, Leo Stewart, Muhammad Waquas and Mayan Saravanabavan state that this report is entirely our own work and writing, and it appropriately references all sources of information, including any use of generative AI, as outlined in the academic integrity policy in the ECE295 course syllabus.

Signatures:

Leo Stewart

Mayan Saravanbavan

Muhammad Waquas

1.0 Introduction

Modern radios like software-defined radios (SDR) are often required to transmit signals across long distances, requiring the radios to meet specific power requirements to address transmission targets. These transmission targets do not just include amplifying the signal's power, but also making sure the signal produced is free of unwanted emissions. Subsystem F, the TX Power Amplifier (PA) and Filter, is the subsystem which helps the radio reach these targets by amplifying the transmission signal and ensuring the output signal remains clean. To correctly implement Subsystem F, a design architecture for the TX PA and Filter that meets the subsystem's signal power and quality requirements must be selected. This document outlines the role of Subsystem F within an SDR, as well as its interaction with other subsystems in Section 2. Section 3 presents a proposed design for the TX PA and Filter, and Section 4 defines the test procedures used to evaluate whether Subsystem F meets its performance requirements.

2.0 Theory of Operation

When a desired signal is produced, it must be prepared for transmission from the radio. Subsystem F will perform an amplification and filtering of the signal, delivering an amplified signal to the output path of the radio for sending. Inside the radio, Subsystem F will receive a differential signal from Subsystem E, as seen in Figure 1. A differential signal is a signal which uses two equal and opposite signals, where the information lies in the difference of the voltages. The two input voltages are received by the TX PA within the subsystem, where the signal power is amplified to meet transmission output power of 1-10W [1].

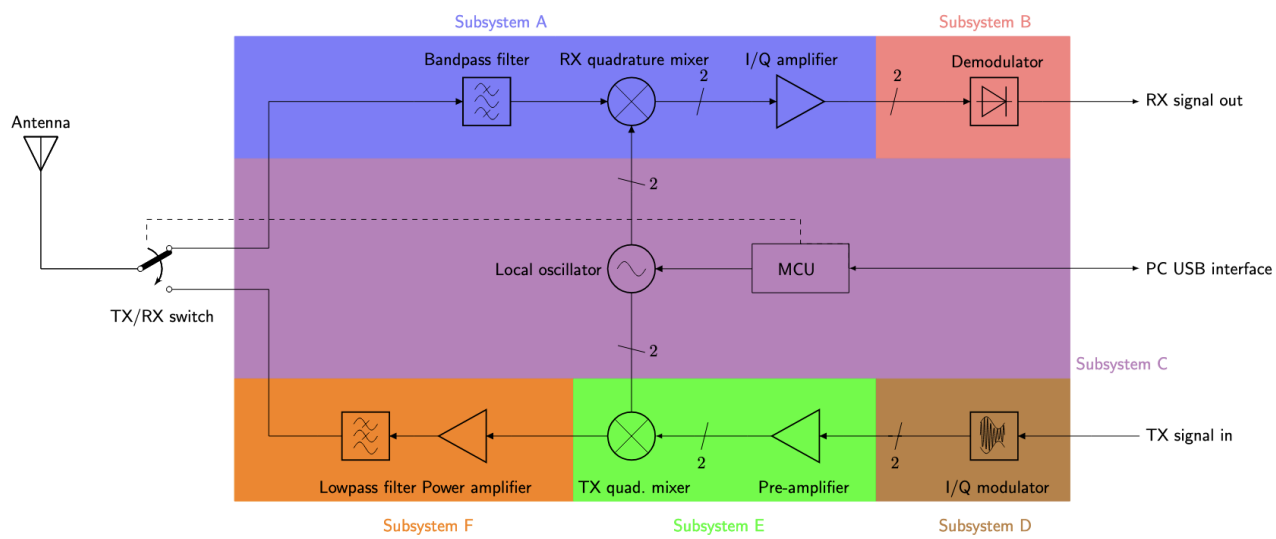

Figure 1. System block diagram showing Subsystem F (orange) connected to Subsystem E (green) in the transmit signal path.

When a signal is amplified, additional unwanted parts known as harmonics can be produced causing unwanted emissions. Harmonics are signal components which operate at integer

multiples of the desired output's frequency. The lowpass filter included in Subsystem F works to attenuate the unwanted harmonics while letting the desired amplified signal of 8-16 MHz pass through, highlighted in Figure 2. Removing the extra harmonics allows for the transmission of a clean signal, reducing the interference on other radio channels. The output of the filter PA_OUT is delivered to the mainboard of the radio for transmission [1].

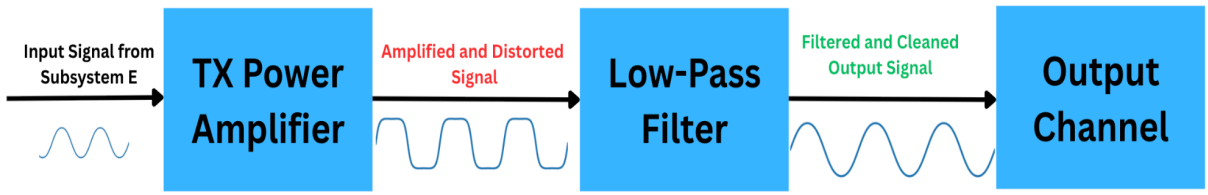

Figure 2. Signal evolution through Subsystem F from Subsystem E input to the filtered transmit output path.

The TX PA and filter are controlled by the enable mechanism of Subsystem F, which makes use of the TXEN signal, generated in Subsystem C. The TXEN signal is used to disable the PA while the radio is receiving. When the TXEN signal is off the PA is enabled, and while the TXEN signal is on, the PA is disabled. The usage of TXEN to disable the PA to not operate while the radio receives signals saves power and stops the radio from sending unintended output signals. The TXEN signal synchronizes Subsystem F operation, with the radios receiving (RX) and transmission (TX) states [1].

When the signal has been amplified to the desired power, and filtered to remove unwanted harmonics, it is then delivered to a load of 50 Ohms. The load of 50 Ohms serves as the radio's reference impedance, which is specified for the radio's transmission path.

3.0 Proposed Subsystem Design

This section outlines the proposed design of Subsystem F that meets the ICD interface requirements and performance targets. It includes the selected designs for the PA, lowpass filter, and enable circuit.

3.1 Design Requirements

Before presenting the proposed design, it is important to establish the performance targets that Subsystem F must achieve. These requirements, summarized in Table 1, are derived from the ICD and define the constraints that guide every design decision in this proposal.

Parameter	Requirement
Output Power	1-10 W continuous wave (CW) into a 50 Ω resistive load
Total Harmonic Distortion (THD)	Less than 10% at 14 MHz input frequency
Input Signal	Differential (PA_IN_P, PA_IN_N), minimum 1 V_{pp}
Operating Frequency Range	8-16 MHz
Output Load Impedance	50 Ω resistive
Enable Control (TXEN)	Active-low (LVTTL 3.3 V). PA amplifies when low, disabled when high
Supply Voltages	+5 V and +12 V (provided by mainboard)
Board Dimensions	50.8 mm × 90.2 mm maximum envelope

Table 1. Subsystem F Design Requirements [1].

3.2 System-Level Architecture

Figure 3 presents the proposed block diagram for Subsystem F. The subsystem operations described in Section 2.0 are implemented across 6 stages.

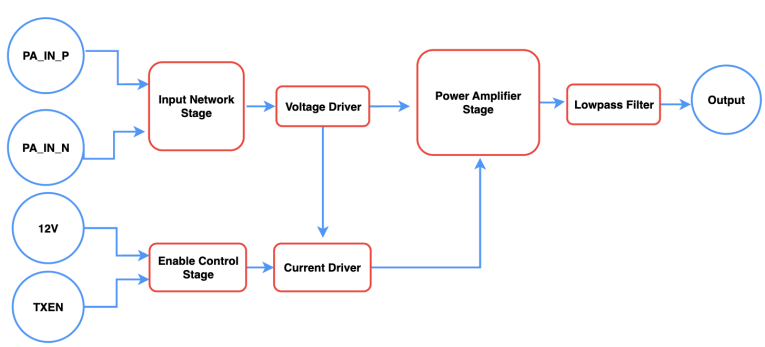

Figure 3. Block Diagram of Proposed Subsystem F Design. The red boxes represent the 6 stages.

3.3 Input Network

The purpose of this stage is to condition the RF signal from Subsystem E for amplification. The proposed design uses a single-ended PA topology. This topology meets all of the requirements outlined above while being more compact than alternative solutions such as a push-pull topology [2]. Given the limited size of the daughtercard, it is important to minimize circuit area wherever possible, which is achieved by this topology. The single-ended topology also achieves reduction in complexity, and energy dissipation while meeting power requirements [3]. The single-ended amplification topology only requires one RF input signal. Thus, PA_IN_P is selected as the RF input signal, and PA_IN_N is terminated to ground through a resistor, as shown in Figure 4.

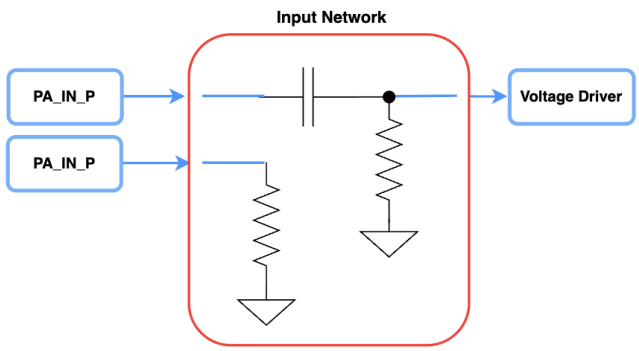

Figure 4. Diagram of the input network stage, and its relationship to the other stages.

3.4 Voltage Driver Stage

The output from Subsystem E is a 1V peak-to-peak sine wave. However, to drive the PA selected in Section 3.7, a large pulse wave is required. To achieve this, a Schmitt Trigger circuit is used as it is a highly effective circuit to convert a sine wave into a noise free, and well defined pulse wave [4]. The circuit and its input and output signals are shown in Figure 5.

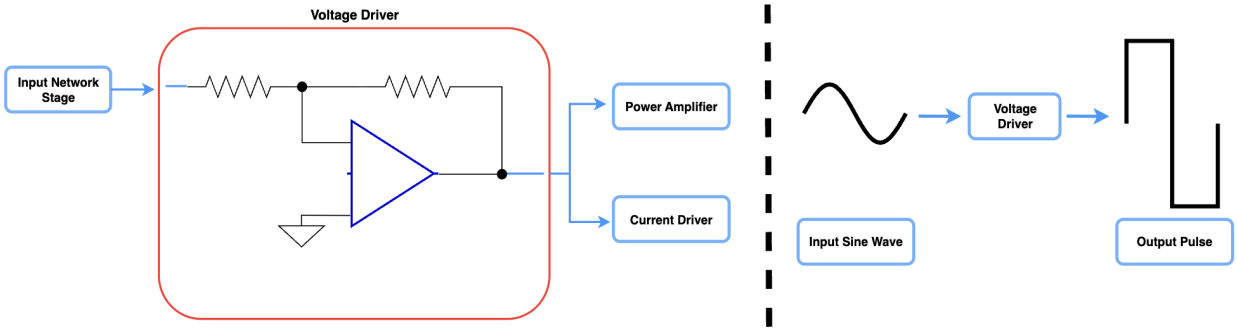

Figure 5. Diagram of voltage driver stage on the left of the dashed line, and its input output signals on the right of the dashed line.

3.5 Current Driver Stage

The PA being used is the IRF510. This PA requires sudden bursts of current in order to operate as desired [5]. In order to meet these requirements a Discrete Totem Pole Current Driver will be designed, as shown in Figure 6.

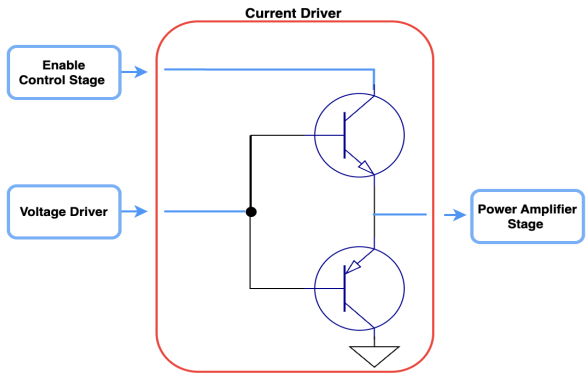

Figure 6. Diagram of the current driver, and its relationship to other stages.

A Discrete Totem Pole Current Driver was chosen because it is one of the most used and reliable current drivers [6]. Additionally, it is a configuration that provides high-current drive, fast switching, and is low cost [6]. BJT transistors were chosen rather than MOSFET transistors because they provide predictable current gain, fast switching, and low shoot-through rates (a shoot-through is when both transistors turn on at the same time, which is undesirable) [6].

3.6 Enable Control Stage

The TXEN signal will control the operation of the PA. This is achieved by intercepting the signal path before the Current Driver by using an And Gate, as shown in Figure 7.

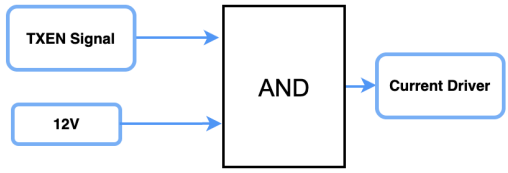

Figure 7. Diagram showing the connection of the TXEN signal to other stages of the subsystem.

The And Gate will disconnect the subsystem when any of the two inputs are 0V. Otherwise, the And Gate will maintain the connections of the subsystem, allowing it to operate. Operation of the And Gate is summarized in Table A1 (Appendix). This method of using an And Gate to enable and disable the subsystem is inexpensive, and widely used in the electronics industry [7][8].

3.7 Power Amplifier (PA)

The PA stage is responsible for strengthening the RF signal from the input network to meet the required 1–10 W continuous output power. To achieve this, an IRF510 MOSFET will be used.

This PA is implemented using a single-ended Class D amplifier topology, as shown in Figure 8 below.
The IRF510 is chosen because it is an inexpensive transistor that is best able to meet the power output requirements [5]. Table A2 (Appendix) compares the IRF510 against other common transistors. The PA is designed in a Class D topology because it provides significantly higher power efficiency compared to linear amplifier topologies [9]. Linear topologies sacrifice power efficiency in order to preserve signal linearity and as a result, they produce fewer harmonics, but a large portion of the supplied power is dissipated as heat. This heat generation leads to several design challenges, including PCB overheating, thermal management, and the need for components that are able to withstand high ambient temperatures. Additionally, delivering 1–10W of continuous output power using a linear topology would require substantially more input power, which is difficult to achieve due to the voltage constraints of Subsystem F [10] [11] [12].

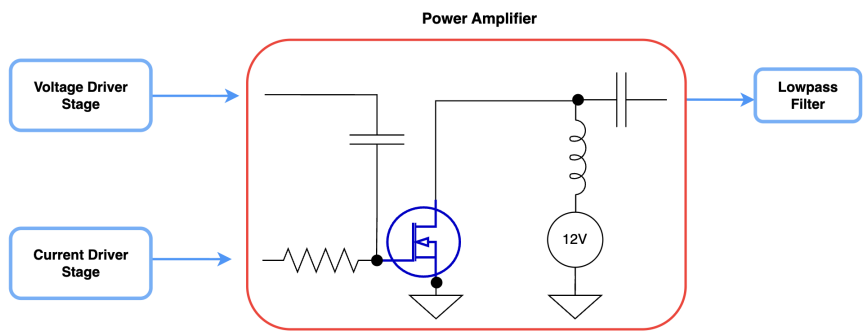

Figure 8. Electrical diagram of PA stage, and its relationship to other stages. The IRF510 Mosfet is highlighted in purple.

3.8 Lowpass Filter Stage=

The filtering of Subsystem F is implemented using a third-order Butterworth lowpass filter, shown in Figure 9 below.

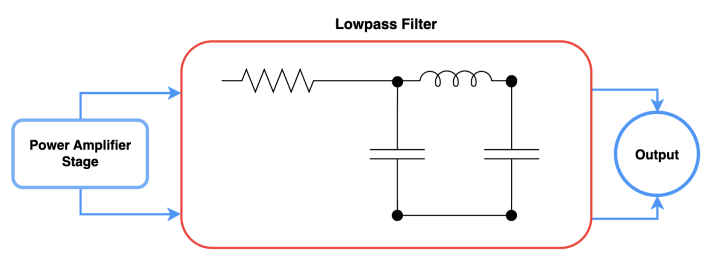

Figure 9. Electrical diagram of Butterworth lowpass filter, and its relationship to other stages.

The Butterworth filter topology was chosen because it ensures that all transmit signals experience minimal distortion after filtering [13]. Not all lowpass filters satisfy this requirement. Figure 10 below, uses a red box to highlight how different filters treat the transmit frequencies.

The order of the Butterworth lowpass filter determines the steepness of its roll-off and the attenuation of higher order harmonics created by the PA. Higher order filters provide greater attenuation of harmonic components, and consequently a steeper roll-off, as shown in Figure 11 below. A third-order Butterworth filter provides sufficient attenuation to meet THD requirement for this subsystem [1][5][14][15]. Increasing the filter order would further reduce harmonic content but would also introduce additional problems, such as heat generation, and power loss [16].

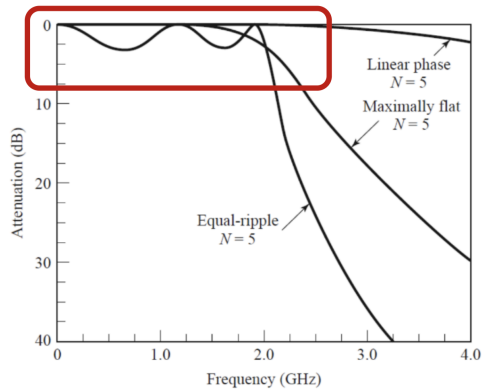

Figure 10. Three common lowpass filters (Maximally flat, i.e., the Butterworth filter). Adapted from [17].

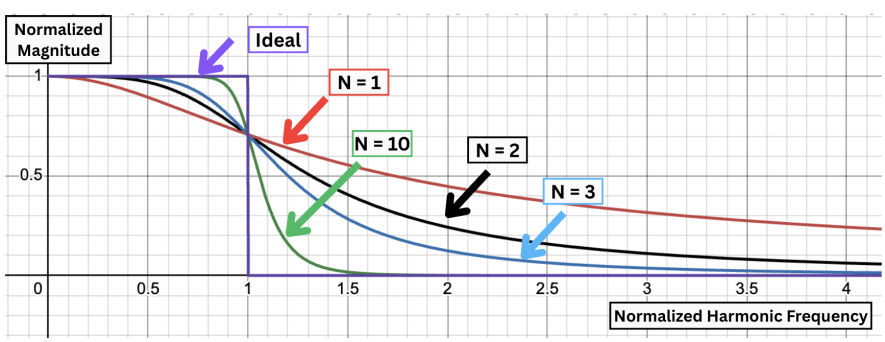

Figure 11. Shows how the order (N) of the lowpass filter affects the magnitude of a harmonic present after filtering.

4.0 Test Procedures

The following test procedures will verify if Subsystem F meets three core performance requirements outlined in the ICD. These requirements are sufficient output power delivery, acceptable harmonic distortion levels, and correct enable/disable behavior.

4.1 Test 1: Output Power Verification

This test should be performed first, as it establishes the baseline output power that Tests 2 and 3 depend on. The estimated completion time is approximately 15 minutes. It verifies that the PA delivers 1-10 W of continuous wave power into a 50 Ω resistive load across the 8-16 MHz operating band. Table 2 outlines the full test details.

	Description
Equipment	Signal generator, Oscilloscope, 50 Ω resistive load, and DC power supply (+12 V, +5 V)
Procedure	1. Connect the DC power supply to the subsystem and assert /TXEN low to enable the PA. 2. Apply a 14 MHz sinusoidal signal at 1 V_{pp} to PA_IN_P, with PA_IN_N terminated to ground. 3. Connect the 50 Ω resistive load to PA_OUT and measure the output voltage waveform using the oscilloscope. 4. Calculate output power using $P = V_{rms}^{2} / 50$. 5. Repeat at 8 MHz and 16 MHz to confirm performance across the full band.
Pass Criteria	The calculated output power must fall within 1-10 W at each frequency.

Table 2. Output Power Verification Test.

4.2 Test 2: Total Harmonic Distortion Measurement

This test should be performed after Test 1 confirms adequate output power. The estimated completion time is approximately 10 minutes. It measures the THD of the output signal at 14 MHz to verify it remains below 10%. Table 3 outlines the full test details.

	Description
Equipment	Signal generator, Spectrum analyzer, 50 Ω resistive load, and DC power supply (+12 V, +5 V)

Procedure	1. Configure the subsystem as in Test 1 with a 14 MHz, 1 V_{pp} input and the PA enabled. 2. Connect the spectrum analyzer to PA_OUT through the 50 Ω load. 3. Measure the amplitude of the fundamental frequency (14 MHz) and its harmonics (28 MHz, 42 MHz, 56 MHz). 4. Calculate THD using THD = $(\sqrt{V_2^{\ 2} + V_3^{\ 2} + V_4^{\ 2}}/V_1) \cdot 100\%$.
Pass Criteria	The measured THD must be less than 10%. A result exceeding this threshold indicates poor harmonic suppression by the filter or excessive PA nonlinearity.

Table 3. Total Harmonic Distortion Measurement Test.

4.3 Test 3: Enable Control (/TXEN) Functionality

This test should be performed last, after both output power and signal quality have been verified. The estimated completion time is approximately 10 minutes. It confirms that the /TXEN signal correctly enables and disables the PA. Table 4 outlines the full test details.

	Description
Equipment	Signal generator, Oscilloscope, 50 Ω resistive load, and DC power supply (+12 V, +5 V, +3.3 V)
Procedure	1. Configure the subsystem as in Test 1 with a 14 MHz, 1 V_{pp} input. 2. Connect the oscilloscope across the 50 Ω resistive load at PA_OUT. 3. Set /TXEN low (0 V) and record the output voltage. 4. Set /TXEN high (3.3 V) and record the output voltage. 5. Toggle /TXEN between states several times to confirm repeatable behavior.
Pass Criteria	When /TXEN is low, the PA must produce an amplified output consistent with Test 1 results. When /TXEN is high, no amplified signal should appear at PA_OUT. The subsystem must respond correctly across all toggle cycles.

Table 4. Enable Control (/TXEN) Functionality Test.

5.0 Conclusion

This document proposes a Subsystem F design which includes a Class D PA, a lowpass filter, and an enable circuit to control the subsystem. The key targets for the proposed design are the delivery of 1-10W of power to a 50Ω load, as well as keeping the total harmonic distortion at less than 10%. The Class D PA was chosen as it balances efficiency and low distortion, which supports the power and efficiency requirements of the PA outlined in the ICD. The control circuit included ensures Subsystem F operates in alignment with the radio's transmit and receive operating modes. The shunt Butterworth lowpass filter was selected to attenuate high frequency harmonics created by the PA, keeping the signal spectrum within desired range. The design integrates with the rest of the radio, by being compatible with the other subsystems which interact with Subsystem F. The next steps for this design are to carry out the tests outlined in Section 4 and verify that the design meets the ICD's requirements.

6.0 Reference List

[1] S. V. Hum, "ECE295 – FLRTRX ICD v5.0.0," University of Toronto, course document (PDF), n.d.

[2] Steve Cripps, RF Power Amplifiers for Wireless Communications, Second Edition , Artech, 2006.

[3] J. J. Carr, RF Components and Circuits. Oxford, U.K.: Newnes, 2002. [Online]. Available: https://uodiyala.edu.iq/uploads/PDF%20ELIBRARY%20UODIYAL A/EL96/RF_Components_and_Circuits.pdf

[4] Schmitt Trigger – Advantages, Working & Applications, Testbook. [Online]. Available: https://testbook.com/electrical-engineering/schmitt-trigger. Accessed: Feb. 8, 2026.

[5] IRF510 Power MOSFET Datasheet, Vishay Siliconix, S21-0819-Rev. D, 02-Aug-2021. [Online]. Available: https://www.vishay.com/docs/91015/irf510.pdf. Accessed: Feb. 3, 2026.

[6] L. Balogh, Fundamentals of MOSFET and IGBT Gate Driver Circuits, Application Report SLUA618A, Texas Instruments, Mar. 2017, rev. Oct. 2018. [Online]. Available: https://www.ti.com/lit/ml/slua618a/slua618a.pdf?ts=1770488943822. Accessed: Feb. 3, 2026.

[7] SkyQuest Technology, "Logic Gates Market Analysis By Type (AND, OR, NOT, NAND, NOR), By Application (Computing, Communications, Consumer Electronics, Automotive), and Region - Global Forecast 2024-2031," SkyQuest Technology, 2024. [Online]. Available: https://www.skyquestt.com/report/logic-gates-market. Accessed: Feb. 4, 2026.

[8] Multiple-input Gates, All About Circuits. [Online]. Available: https://www.allaboutcircuits.com/textbook/digital/chpt-3/multiple-input-gates/. Accessed: Feb. 8, 2026.

[9] Not All Amplifiers Are Created Equally: Class A/B and Class D Amplifiers, Audioengine. [Online]. Available: https://audioengine.com/explore/not-all-amplifiers-are-created-equally-class-a-b-and-class-d-amplifiers/. Accessed: Feb. 1, 2026.

[10] Class A Amplifier, Electronics-Tutorials.ws. [Online]. Available: https://www.electronics-tutorials.com/amplifiers/amp_5.html. Accessed: Feb. 1, 2026.

[11] Class B Amplifier, Electronics-Tutorials.ws. [Online]. Available: https://www.electronics-tutorials.ws/amplifier/amp_6.html. Accessed: Feb. 1, 2026.

[12] M. Bloechl, M. Bataineh and D. Harrell, "Class D Switching Power Amplifiers: Theory, Design, and Performance," IEEE SoutheastCon, 2004. Proceedings., Greensboro, NC, USA, 2004, pp. 123-146, doi: 10.1109/SECON.2004.1287908.

[13] Band-Stop (Notch) Filters, Electronics-Tutorials.ws. [Online]. Available: https://www.electronics-tutorials.ws/filter/filter_8.html. Accessed: Feb. 2, 2026.

[14] D. Gehrke and A. Hahn, "10 MHz Butterworth Filter Using the Operational Amplifier THS4001," Application Report SLOA032, Texas Instruments, Oct. 1999. [Online]. Available: https://www.ti.com/lit/an/sloa032/sloa032.pdf. Accessed: Feb. 3 2026.

[15] Band-Stop (Notch) Filters, Electronics-Tutorials.ws. [Online]. Available: https://www.electronics-tutorials.ws/filter/filter_8.html. Accessed: Feb. 3, 2026.

[16] MAX7409/MAX7414 5th-Order Lowpass, Switched-Capacitor Filter Datasheet, Maxim Integrated (now Analog Devices), 19-4766; Rev. 1; Sep. 1998. [Online]. Available: https://www.mouser.ca/datasheet/3/1014/1/MAX7409_MAX7414.pdf. Accessed: Feb. 1, 2026.

[17] D. M. Pozar, Microwave Engineering, 4th ed. Hoboken, NJ, USA: John Wiley & Sons, 2012.

[18] Onsemi, "MMBF170: N-Channel Enhancement Mode Field Effect Transistor," MMBF170-D datasheet, Aug. 2024. [Online]. Available: https://www.onsemi.com/pdf/datasheet/mmbf170-d.pdf. Accessed: Feb. 6, 2026

[19] Onsemi, "BSR14: NPN Small Signal Surface Mount Transistor," BSR14-D datasheet, Aug. 2022. [Online]. Available: https://www.onsemi.com/pdf/datasheet/bsr14-d.pdf. Accessed: Feb. 6, 2026.

[20] Infineon Technologies AG, "IRLML2060: StrongIRFET Power MOSFET," IRLML2060 datasheet, Nov. 2014. [Online]. Available: https://www.infineon.com/assets/row/public/documents/24/49/infineon-irlml2060-datasheet-en.pdf. Accessed: Feb. 7, 2026.

Appendix A

Input #1 (TXEN Signal)	Input #2 (12V Power Supply)	And Gate	Subsystem Enabled/Disabled
TXEN (HIGH) = 0V	12V	Creates a disconnect	Disabled
TXEN (LOW) = 3.3V	12V	Creates a connection	Enabled

Table A1. Summarizes when the subsystem is enabled or disabled, depending on the inputs of the And Gate.

Transistor	Power Dissipated	Maximum Drain Current	Packaging Size
IRF510 [5]	1.5W	5.6A	TO-220
BS170 [18]	0.830W	0.5A	TO-92
BSR14 [19]	0.350W	0.8A	SOT-23
IRLML2060 [20]	1.25W	1.2A	SOT-23

Table A2. Comparison of common PA transistors. The best-performing metric in each category is highlighted in green. Note: Higher drain current correlates to a higher power rating.

7.0 Attribution Table

Section	Student Names		
	Leo Stewart	Mayan Saravanabavan	Muhammad Waquas
Introduction	WD + MR + ET+FP	ET	FP
Theory of Operation	WD + MR + ET+FP		FP
Proposed Subsystem Design	RS1 + ET (Minor)	OR1	WD + ET + MR + RS1 + FP
Test Procedures	FP	WD + MR + ET	FP
Conclusion	WD + MR + ET+FP	ET (Minor)	ET (Minor) + FP
Reference List	WD+FP		WD + FP
Appendix	WD+FP		WD + FP

Fill in abbreviations for the tasks you completed for each section of the report using the abbreviations below. You do not have to fill in every cell in the table.

RS – Research (give details below)

WD – Wrote Draft

MR – Major Revision

ET – Edited

FP – Final Proofread of COMPLETE DOCUMENT verifying for flow and consistency

AI – Used Generative AI (give details below)

OR – Other (give details below)

If you put RS (research) please add a number identifier such as RS1, RS2, etc. Give the research question below. Note: you are not limited to two research questions, add the correct number of entries below to capture your team's work.

RS1:

Different classes of PA
Pros and Cons of Class D PA
Types of Lowpass Filters
How to make an enable circuit
Types of comparators and their pros and cons
Single ended topology vs other topologies
Different types of current drivers and when they should be used
Discrete Totem Pole Current Driver

RS2:

Some examples include: conducting site visits, identifying and reviewing articles for information, meeting with a librarian for help, etc.

If you put AI (used Generative AI) please add a number identifier such as AI1, AI2, etc. Explain how you used Generative AI in the section or document. Note: you are not limited to two AI usages, add the correct number of entries below to capture your team's work.

AI1:

AI2:

Some examples include: generating a draft for you to review, idea generation, editing a section you drafted, etc.

If you put OR (other) please add a number identifier such as OR1, OR2, etc. Explain what you did below. Note: you are not limited to 'other' types of work, add the correct number of entries below to capture your team's work.

OR 1: Completed Section 3.0 and Section 3.1. Helped with Section 3.2.

OR 2:

OR covers any work you did to develop the document that is not described by writing, editing, and/or researching. Some examples include: developing figures or diagrams to support multimodality, organizing references, meeting with your CI for guidance (out of tutorial), etc.

By typing your name below to sign, you verify that you have:

- Read the attribution table and agree that it accurately reflects your contribution to the associated document.
- Written the sections of the document attributed to you as WD and that they are either entirely original, or you have included appropriate acknowledgement of AI usage.
- Accurately cited and referenced any ideas or expressions of ideas taken from other sources according to the standard specified by this course.
- Read the University of Toronto Code of Behaviour on Academic Matters and understand the definition of academic offense includes (but is not limited to) all forms of plagiarism. Additionally, you understand that if you provide another student with any part of your own or your team's work, for whatever reason, and the student having received the work uses it

for the purposes of committing an academic offence, then you are considered an equal party in the offence and will be subject to academic sanctions.

Student #1 Name	Leo Stewart	Student #5 Name	
Student #2 Name	Mayan Saravanabavan	Student #6 Name	
Student #3 Name	Muhammad Waquas		
Student #4 Name			